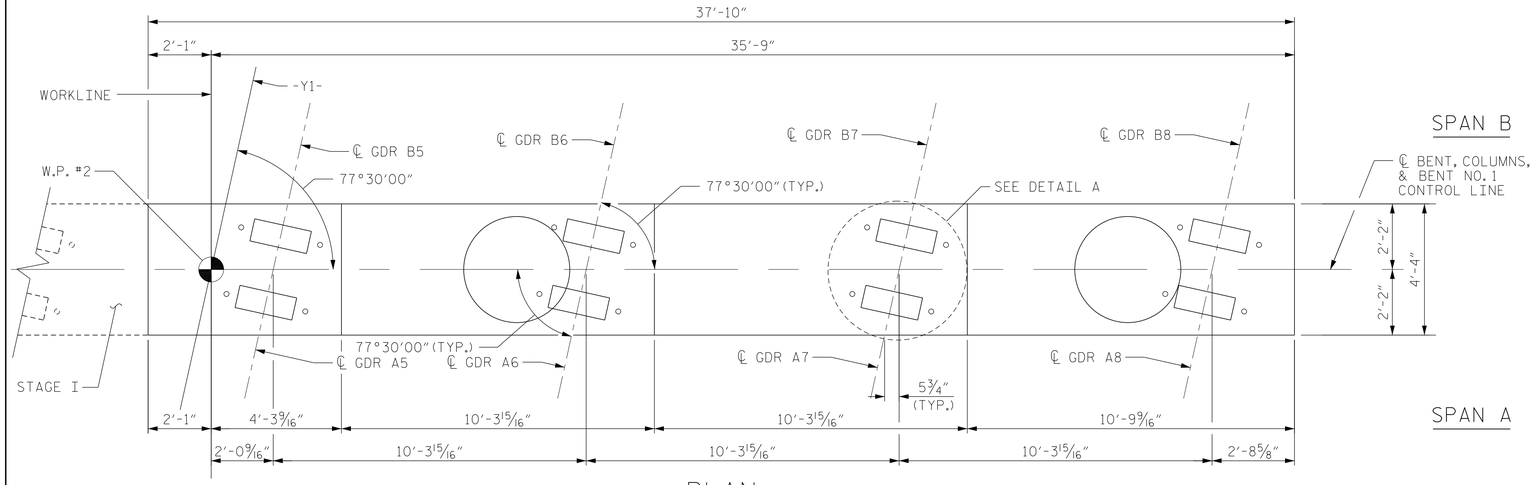

PLAN

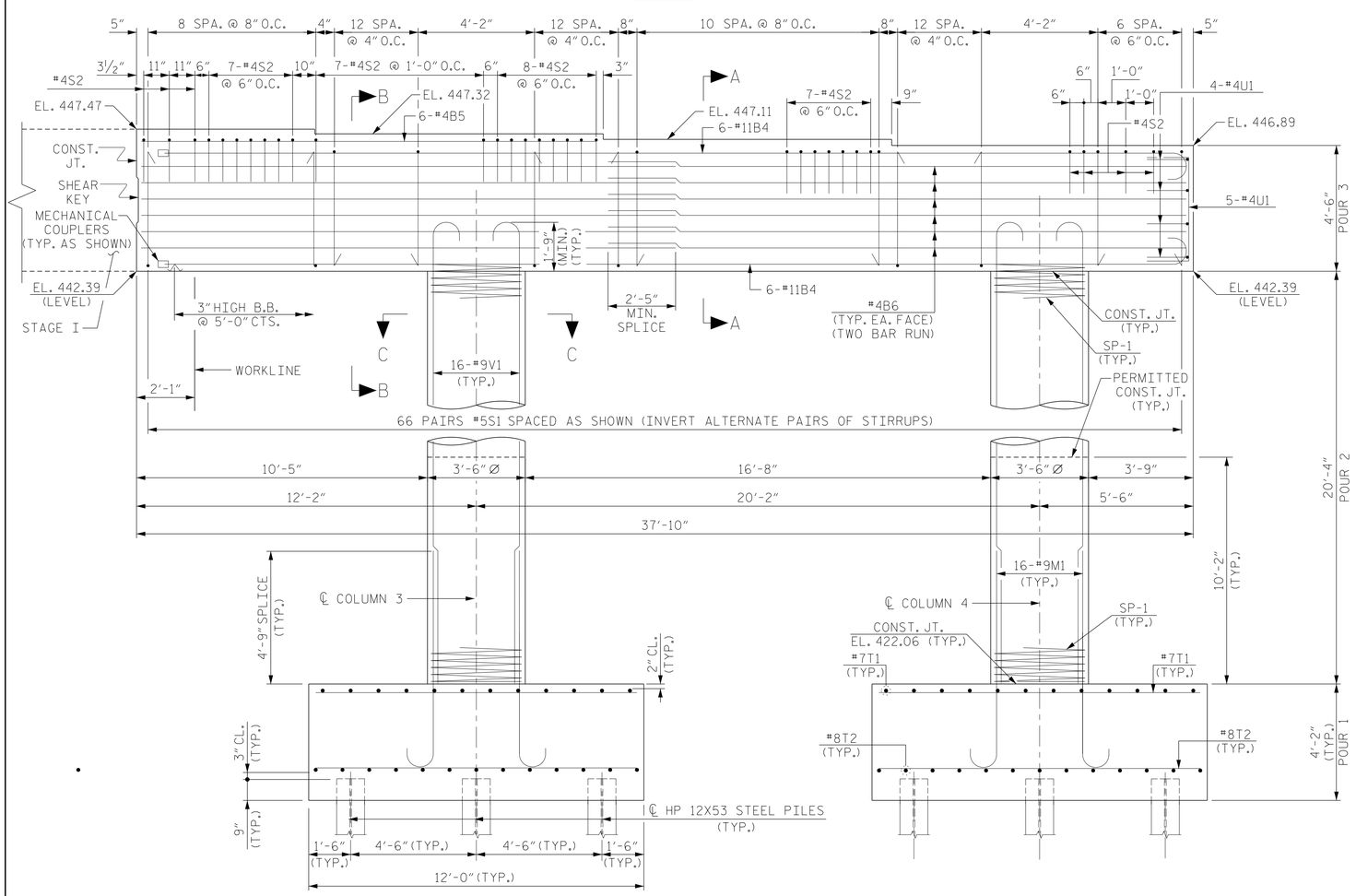

ELEVATION

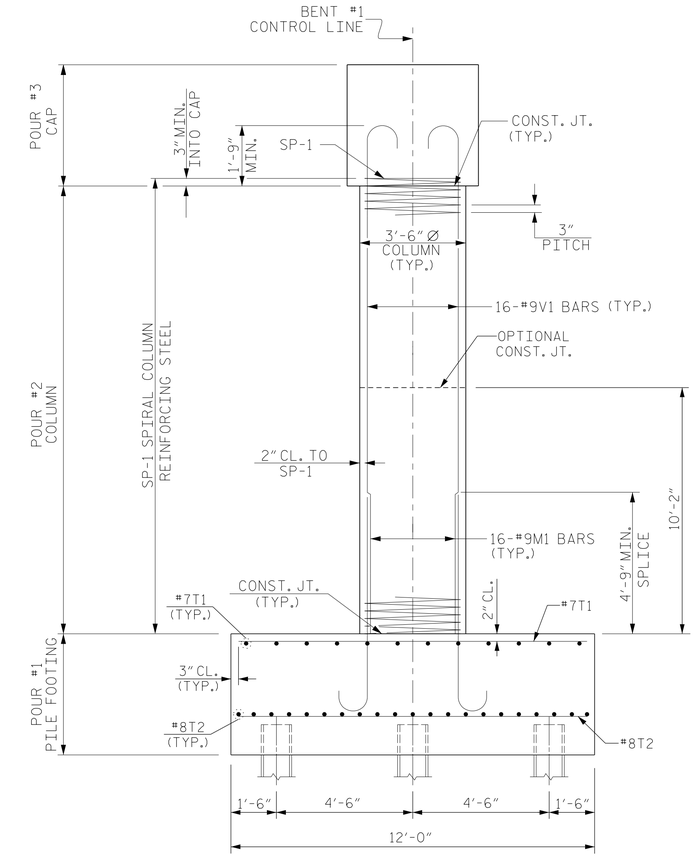

END ELEVATION

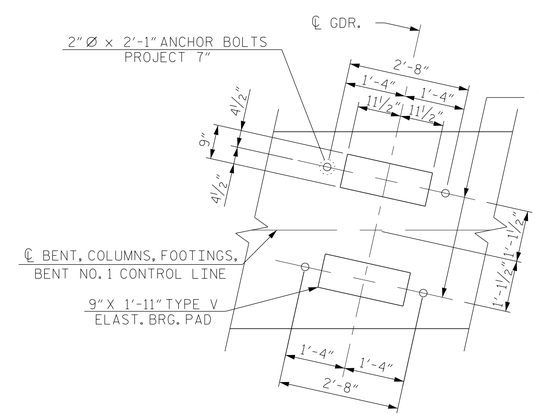

DETAIL A

(DIMENSIONS ARE TYPICAL EACH GIRDER)
COLUMNS NOT SHOWN FOR CLARITY

NORTH CAROLINA PROFESSIONAL SEAL 11725 ENGINEER DAVID R. RUGGLES

DocuSigned by: David Ruggles C46276BDF412422... 11/17/2014

PROJECT NO. I-0914BA

VANCE COUNTY

STATION: 22+06.96 -Y1- POT

SHEET 2 OF 3

STATE OF NORTH CAROLINA
DEPARTMENT OF TRANSPORTATION
RALEIGH

BENT NO. 1

STAGE II

DWG. 40 OF 48

STEWART

Firm License No. C-1051
421 Fayetteville St,
Suite 400
Raleigh, NC 27601
T 919.380.8750
www.stewartinc.com

REVISIONS						SHEET NO.
NO.	BY:	DATE:	NO.	BY:	DATE:	S-40
1			3			TOTAL SHEETS
2			4			177

DRAWN BY: P. JACOB DATE : 08/14
CHECKED BY: D. RUGGLES DATE : 09/14
DESIGN ENGINEER OF RECORD: D. RUGGLES DATE : 09/14