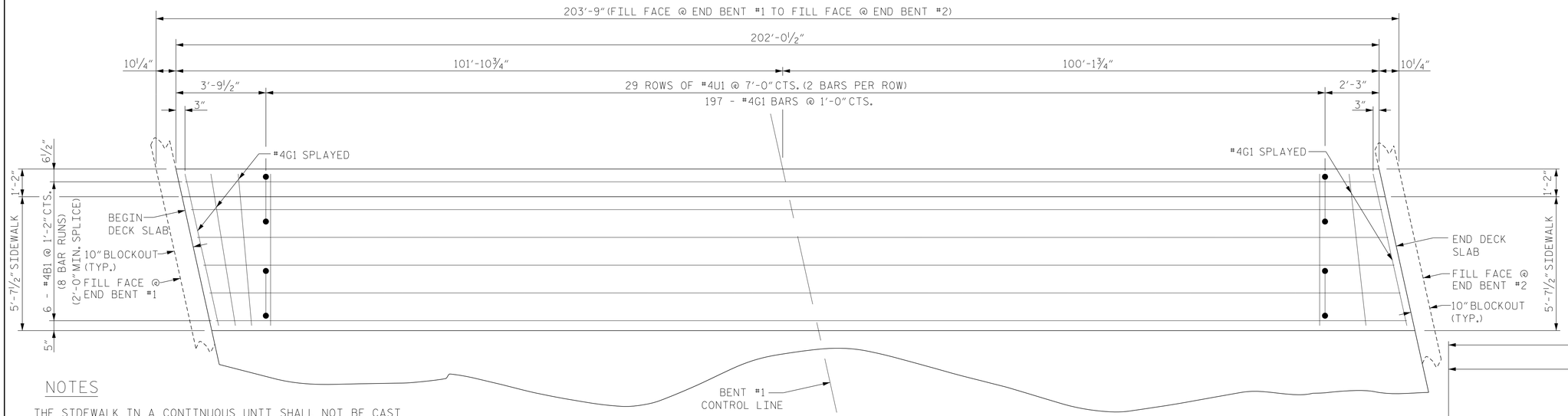

PLAN OF SIDEWALK

STAGE I

NOTES

THE SIDEWALK IN A CONTINUOUS UNIT SHALL NOT BE CAST UNTIL ALL SLAB CONCRETE IN THAT UNIT HAS BEEN CAST AND HAS REACHED A MINIMUM COMPRESSIVE STRENGTH OF 3,000 PSI.

ALL REINFORCING STEEL IN THE SIDEWALK SHALL BE EPOXY COATED.

GROOVED CONTRACTION JOINT, ½" IN DEPTH, SHALL BE TOOLED IN ALL EXPOSED FACES OF THE SIDEWALK IN ACCORDANCE WITH ARTICLE 825-10(B) OF THE STANDARD SPECIFICATIONS. THE CONTRACTION JOINTS SHALL BE LOCATED AT A SPACING OF 8 FT. TO 10 FT. BETWEEN EXPANSION JOINTS. NO CONTRACTION JOINTS WILL BE REQUIRED FOR SEGMENTS LESS THAN 10 FEET IN LENGTH.

PAYMENT FOR SIDEWALK SHALL BE INCLUDED IN PAY ITEM FOR "REINFORCED CONCRETE DECK SLAB".

FOR SIDEWALK QUANTITIES, SEE SUPERSTRUCTURE BILL OF MATERIAL SHEET.

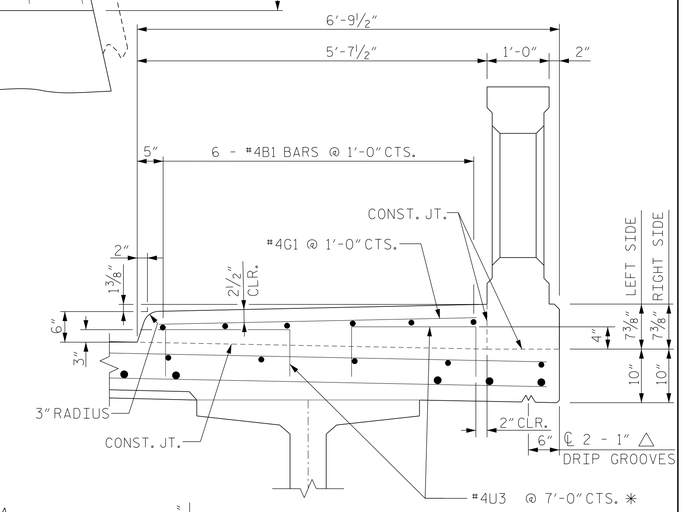

SECTION THRU SIDEWALK

✱ "U" BARS MAY BE PUSHED INTO GREEN CONCRETE AFTER SPAN HAS BEEN SCREEDED OFF.

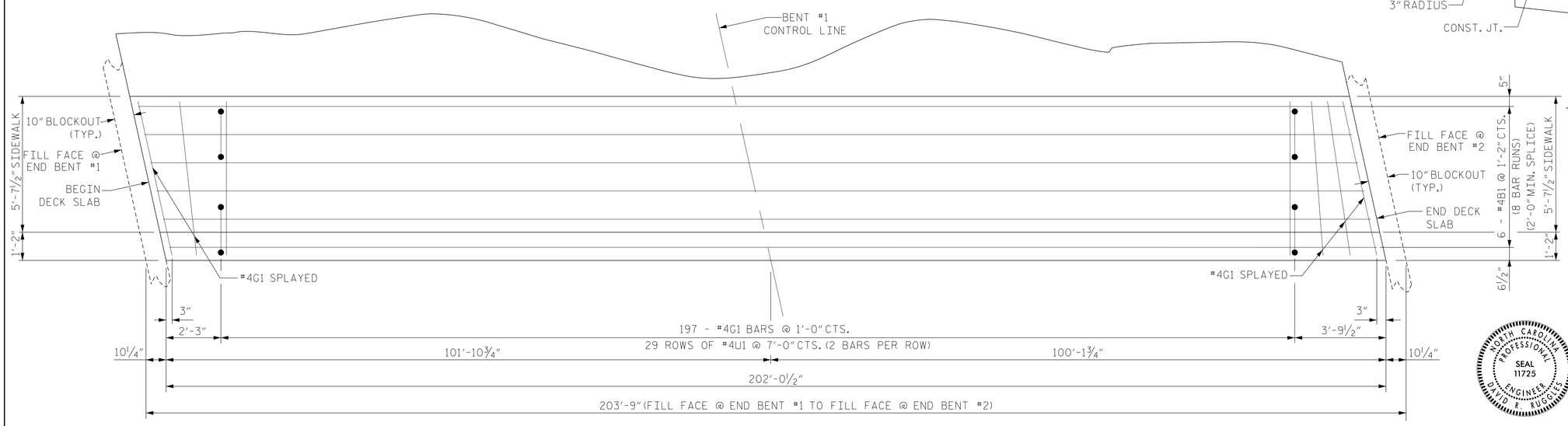

PLAN OF SIDEWALK

STAGE II

PROJECT NO. I-0914BA

VANCE COUNTY

STATION: 22+06.96 -Y1- POT

NORTH CAROLINA PROFESSIONAL SEAL 11725 ENGINEER DAVID R. RUGGLES

DocuSigned by: David Ruggles C462768DF412422... 11/17/2014

DWG. 20 OF 48

STEWART

Firm License No. C-1051
421 Fayetteville St,
Suite 400
Raleigh, NC 27601
T 919.380.8750
www.stewartinc.com

STATE OF NORTH CAROLINA
DEPARTMENT OF TRANSPORTATION
RALEIGH

SUPERSTRUCTURE
SIDEWALK DETAILS

REVISIONS						SHEET NO.
NO.	BY:	DATE:	NO.	BY:	DATE:	S-20
1			3			TOTAL SHEETS
2			4			177

DRAWN BY: J. LOFTUS	DATE : 08/14	
CHECKED BY: D. RUGGLES	DATE : 09/14	
DESIGN ENGINEER OF RECORD: D. RUGGLES	DATE : 09/14	