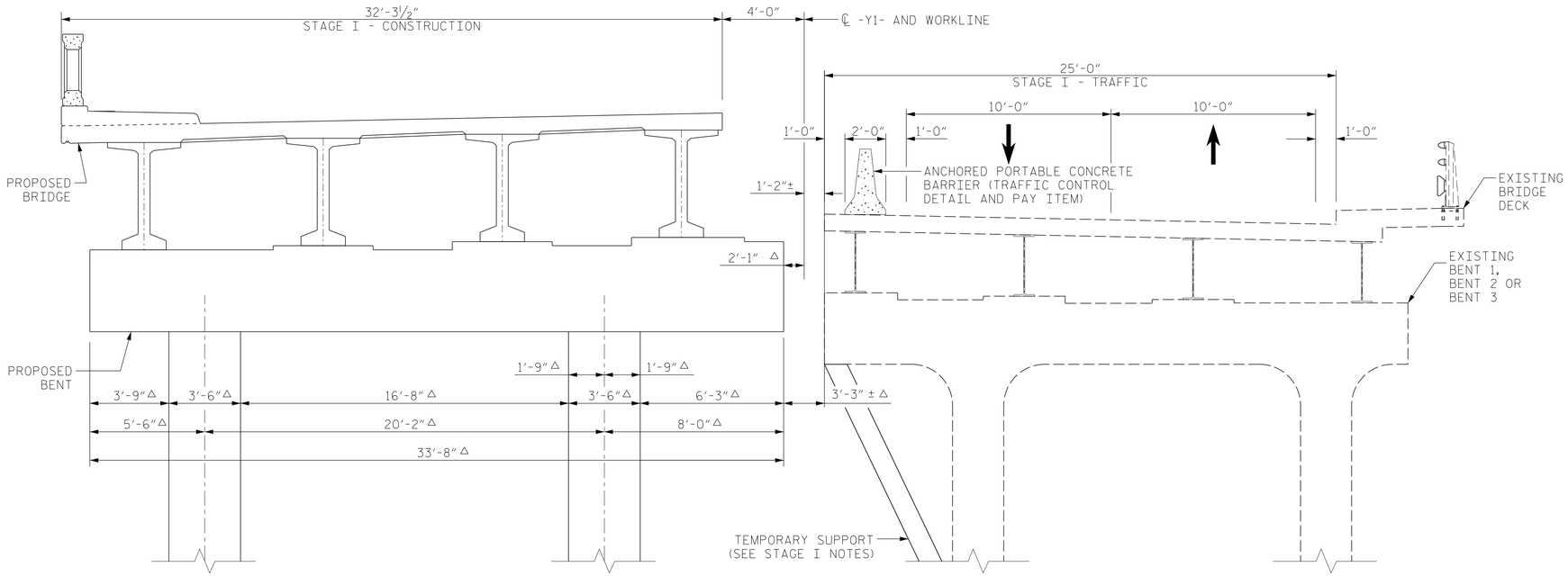

TYPICAL SECTION - STAGE I CONSTRUCTION & STAGE I TRAFFIC

APPLICABLE FOR BENTS 1, 2 AND 3

ALL DIMENSIONS ARE NORMAL TO -Y1- UNLESS NOTED OTHERWISE

△ MEASURED ALONG BENT

FOR STAGE I NOTES, SEE SHEET 1 OF 3

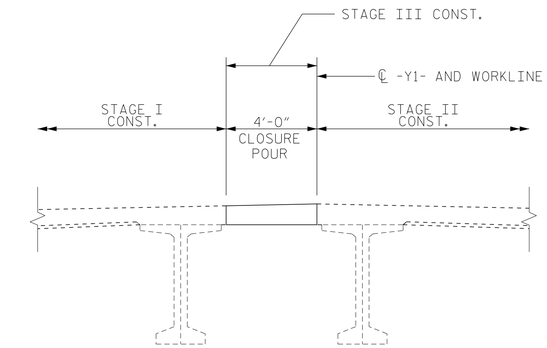

STAGE III CONSTRUCTION

STAGE III:

1. CONSTRUCT CLOSURE POUR.
2. WHEN APPROPRIATE, REMOVE TEMPORARY CONCRETE BARRIER AND SHIFT TRAFFIC TO FINAL PATTERN.

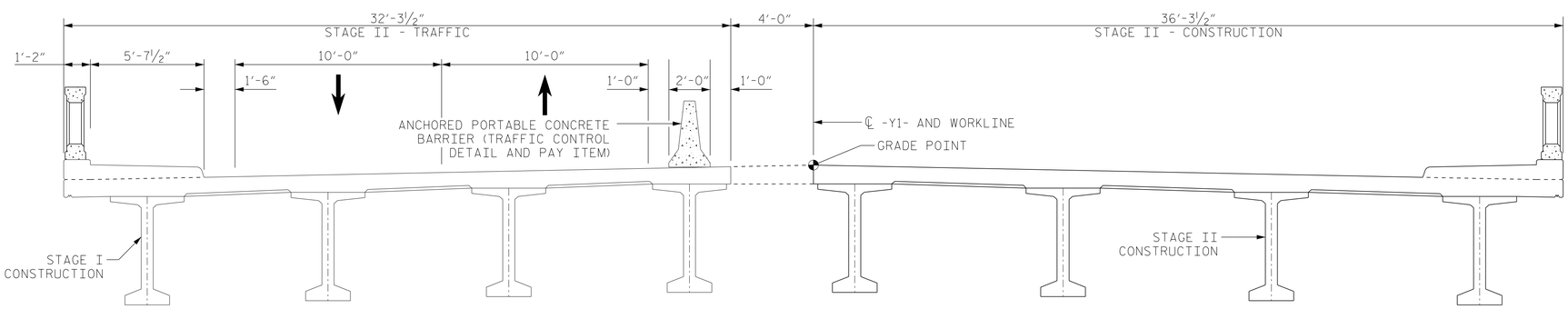

STAGE II:

1. SHIFT TRAFFIC ONTO STAGE I PORTION OF PROPOSED BRIDGE.
2. REMOVE REMAINDER OF EXISTING BRIDGE.
3. PLACE REMAINING APPROACH FILL AND REMOVE SHORING NO. 1 AND SHORING NO. 4 AS DIRECTED BY ENGINEER.
4. CONSTRUCT STAGE II OF PROPOSED BRIDGE.

TYPICAL SECTION - STAGE II CONSTRUCTION & STAGE II TRAFFIC

ALL DIMENSIONS ARE NORMAL TO -Y1-

PROJECT NO. I-0914BA

VANCE COUNTY

STATION: 22+06.96 -Y1- POT

SHEET 2 OF 3

NORTH CAROLINA PROFESSIONAL SEAL 11725 ENGINEER DAVID R. RUGGLES

DocuSigned by: David Ruggles C462768DF412422... 11/17/2014

DWG. 6 OF 48

STATE OF NORTH CAROLINA
DEPARTMENT OF TRANSPORTATION
RALEIGH

CONSTRUCTION STAGING

CONSTRUCTION STAGING

STEWART
Firm License No. C-1051
421 Fayetteville St,
Suite 400
Raleigh, NC 27601
T 919.380.8750
www.stewartinc.com

REVISIONS						SHEET NO.
NO.	BY:	DATE:	NO.	BY:	DATE:	S-6
1			3			TOTAL SHEETS
2			4			177

DRAWN BY: M. BURNS	DATE : 08/14	
CHECKED BY: D. RUGGLES	DATE : 09/14	
DESIGN ENGINEER OF RECORD: D. RUGGLES	DATE : 09/14	