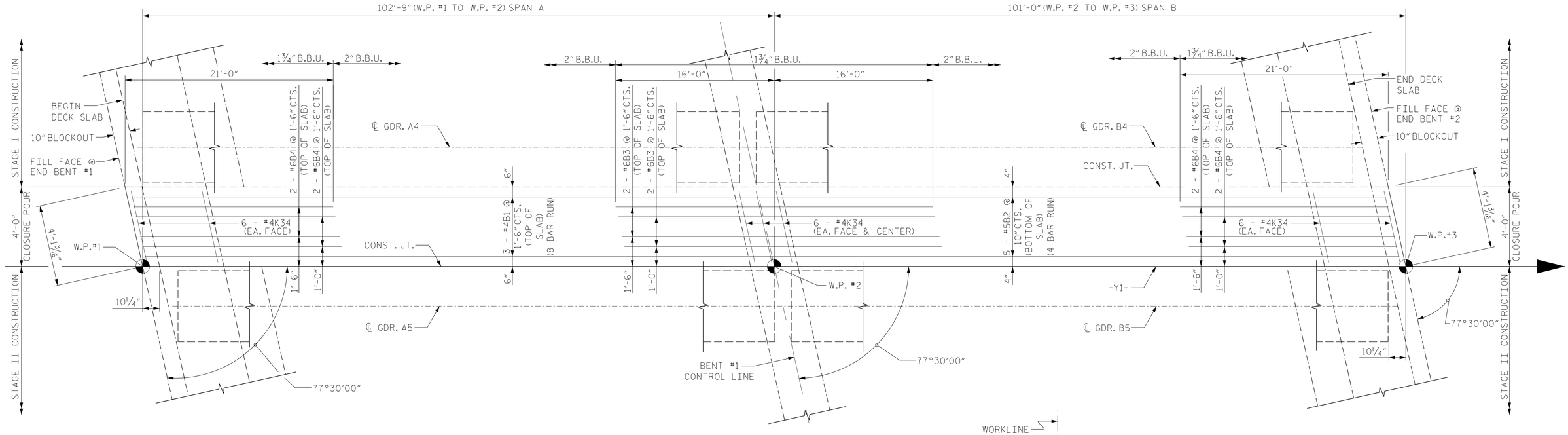

CLOSURE POUR

STAGE III CONSTRUCTION

PLAN OF SPANS

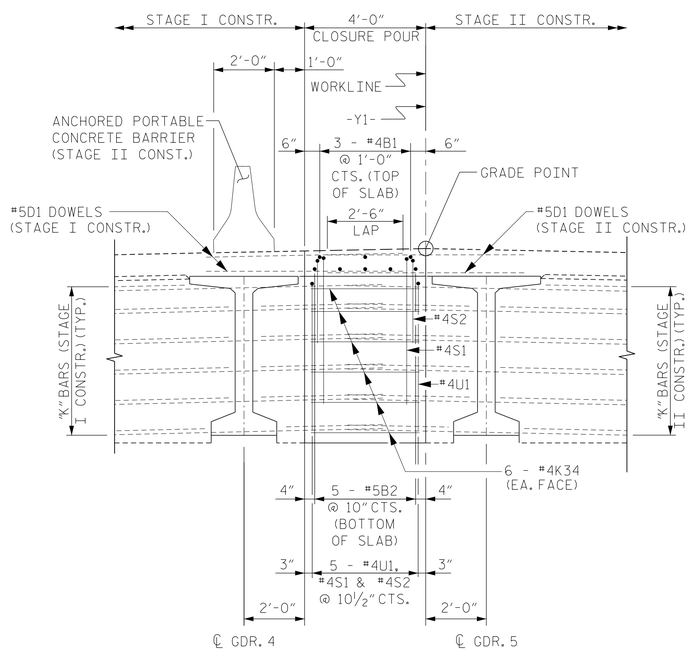

TYPICAL SECTION

SHOWING END-BENT DIAPHRAGMS

NOTE: FOR #6 "B" BARS IN TOP OF SLAB, SEE TYPICAL SECTION SHOWING BENT DIAPHRAGM

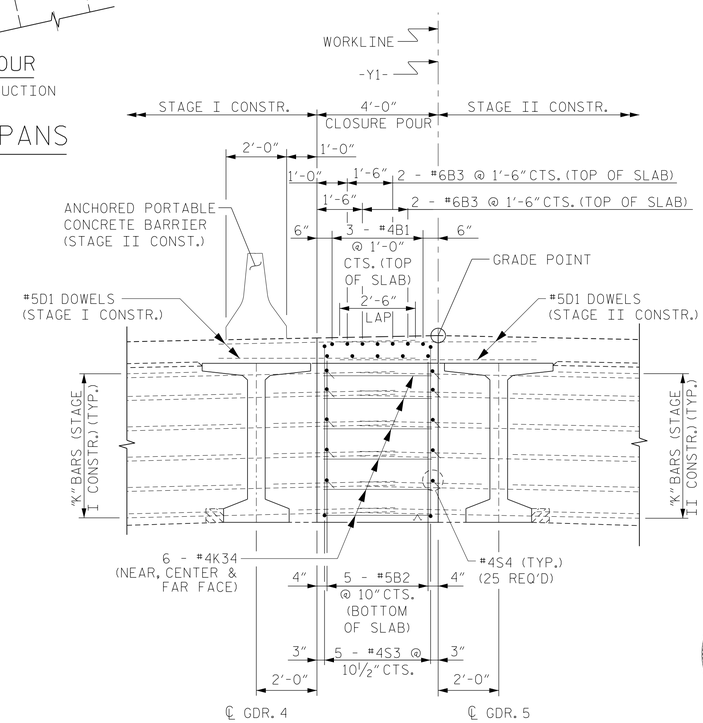

TYPICAL SECTION

SHOWING BENT DIAPHRAGM

PROJECT NO. I-0914BA

VANCE COUNTY

STATION: 22+06.96 -Y1- POT

SHEET 9 OF 9

NORTH CAROLINA PROFESSIONAL SEAL 11725 ENGINEER DAVID R. RUGGLES

DocuSigned by: David Ruggles C462768DF412422... 11/17/2014

DWG. 19 OF 48

Firm License No. C-1051
421 Fayetteville St,
Suite 400
Raleigh, NC 27601
T 919.380.8750
www.stewartinc.com
STEWART

STATE OF NORTH CAROLINA
DEPARTMENT OF TRANSPORTATION
RALEIGH

SUPERSTRUCTURE
PLAN OF SPANS
CLOSURE POUR

REVISIONS							SHEET NO.
NO.	BY:	DATE:	NO.	BY:	DATE:		S-19
1			3				TOTAL SHEETS
2			4				177

DRAWN BY:	J. LOFTUS	DATE :	08/14
CHECKED BY:	D. RUGGLES	DATE :	09/14
DESIGN ENGINEER OF RECORD:	D. RUGGLES	DATE :	09/14