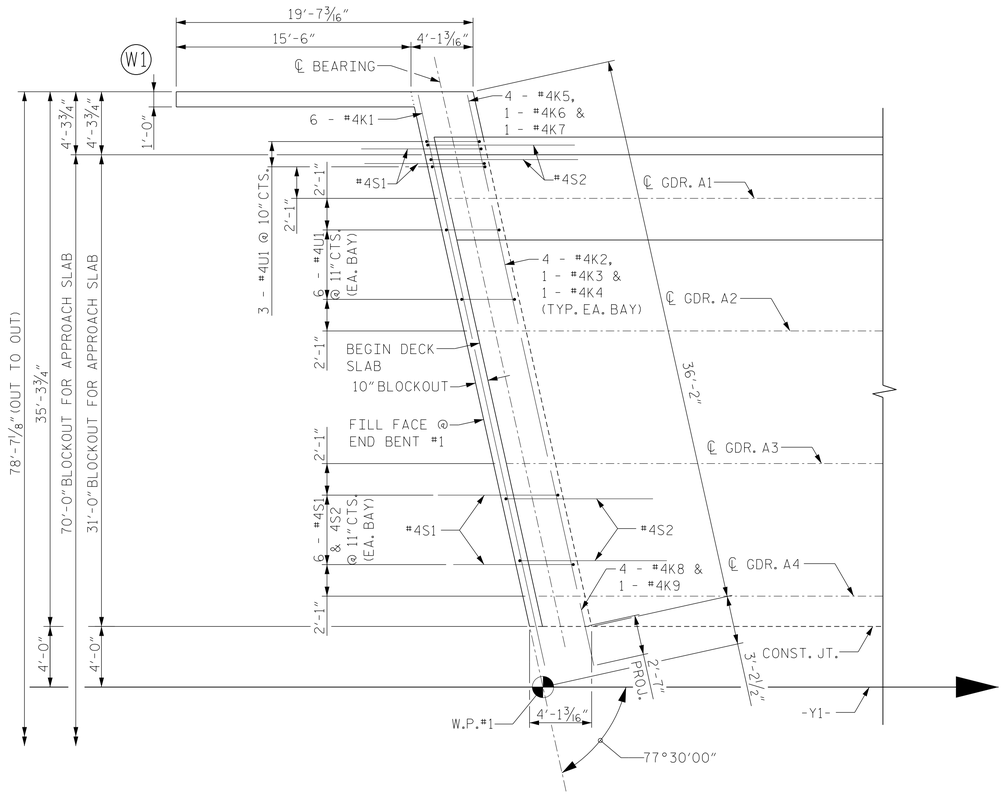

END BENT 1

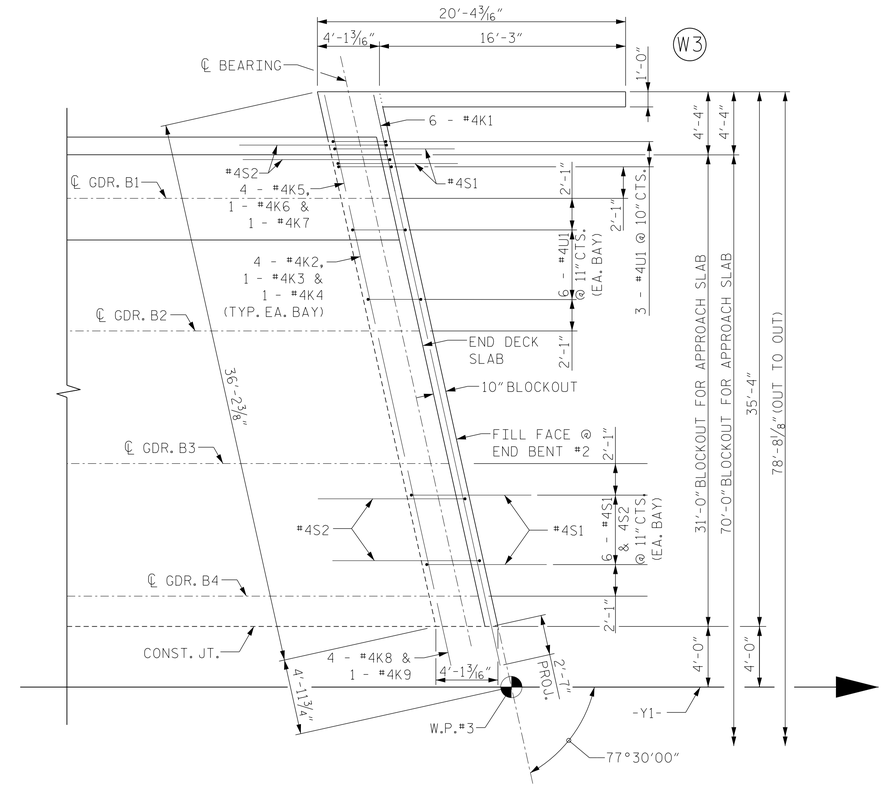

END BENT 2

PLAN OF ABUTMENT WALLS

STAGE I CONSTRUCTION

PROJECT NO. I-0914BA

VANCE COUNTY

STATION: 22+06.96 -Y1- POT

SHEET 3 OF 9

NORTH CAROLINA PROFESSIONAL SEAL 11725 ENGINEER DAVID A. RUGGLES

DocuSigned by: David Ruggles C462768DF412422... 11/17/2014

DWG. 13 OF 48

STATE OF NORTH CAROLINA
DEPARTMENT OF TRANSPORTATION
RALEIGH

SUPERSTRUCTURE
PLAN OF SPANS DETAILS
STAGE I

STEWART
Firm License No. C-1051
421 Fayetteville St,
Suite 400
Raleigh, NC 27601
T 919.380.8750
www.stewartinc.com

REVISIONS						
NO.	BY:	DATE:	NO.	BY:	DATE:	
1			3			
2			4			

SHEET NO. S-13

TOTAL SHEETS 177

DRAWN BY: J. LOFTUS	DATE : 08/14	
CHECKED BY: D. RUGGLES	DATE : 09/14	
DESIGN ENGINEER OF RECORD: D. RUGGLES	DATE : 09/14	