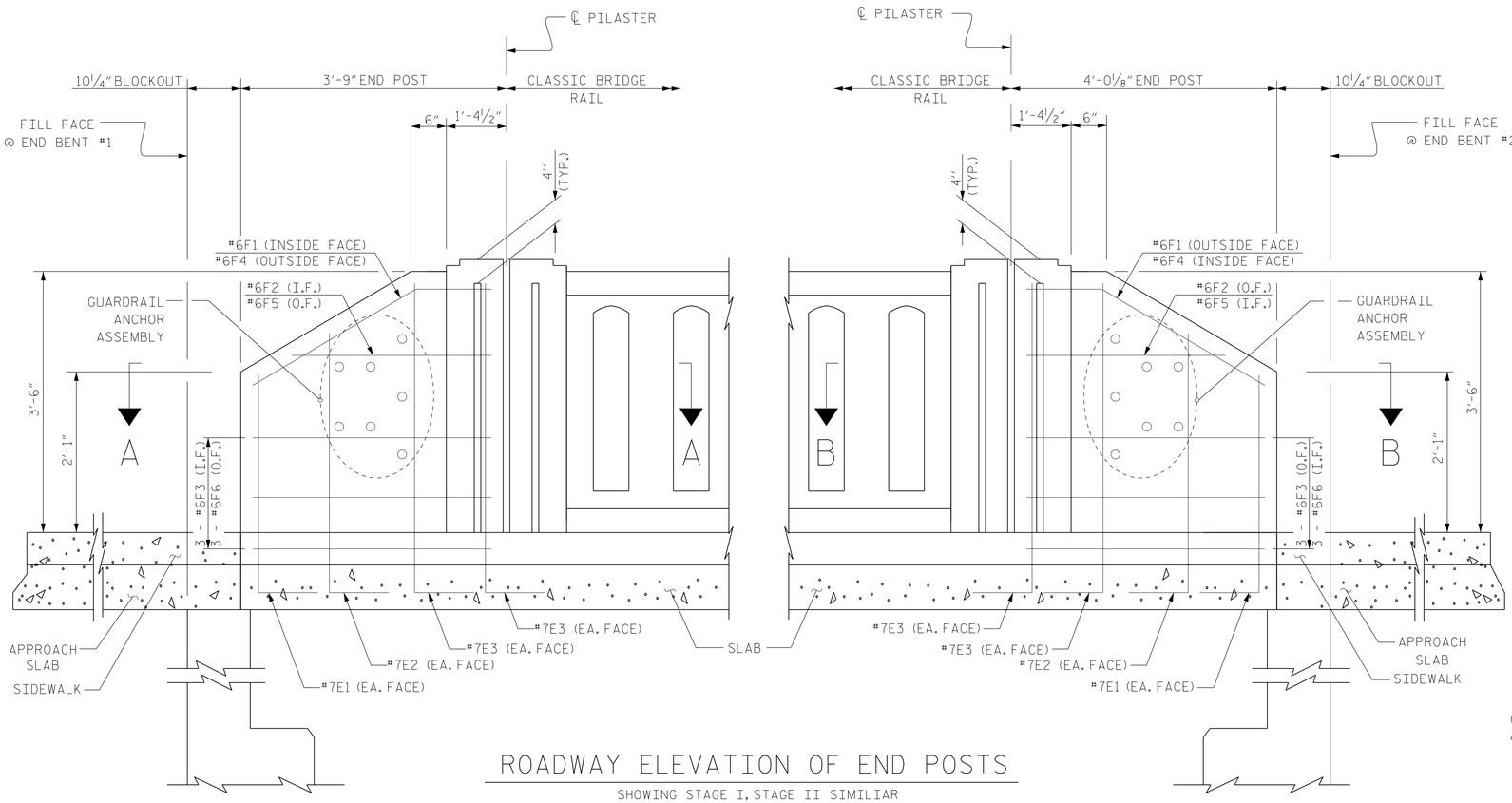

ROADWAY ELEVATION OF END POSTS

SHOWING STAGE I, STAGE II SIMILIAR

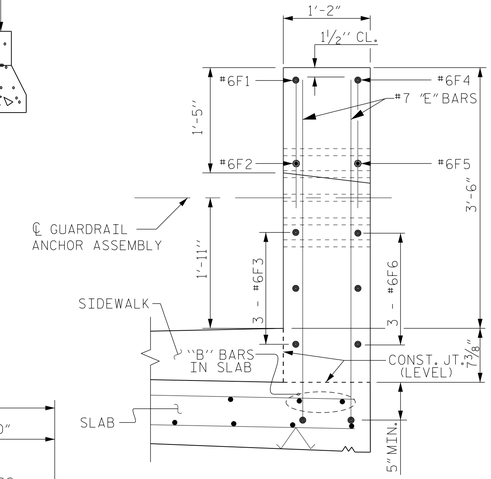

END VIEW

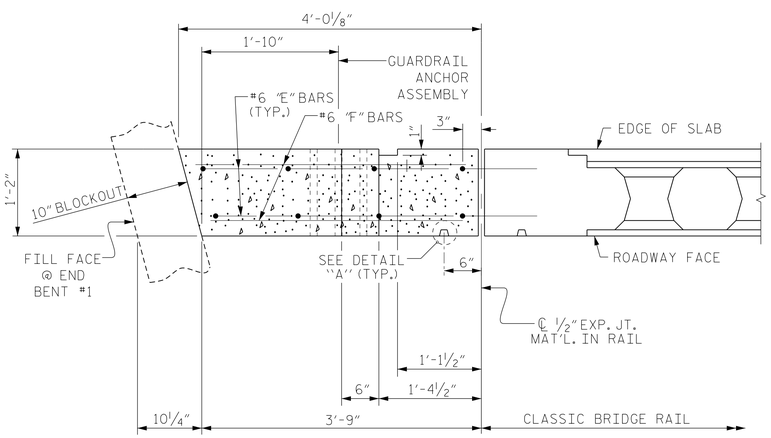

SECTION B-B

SHOWING STAGE I END BENT #1 END POST

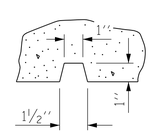

DETAIL "A"

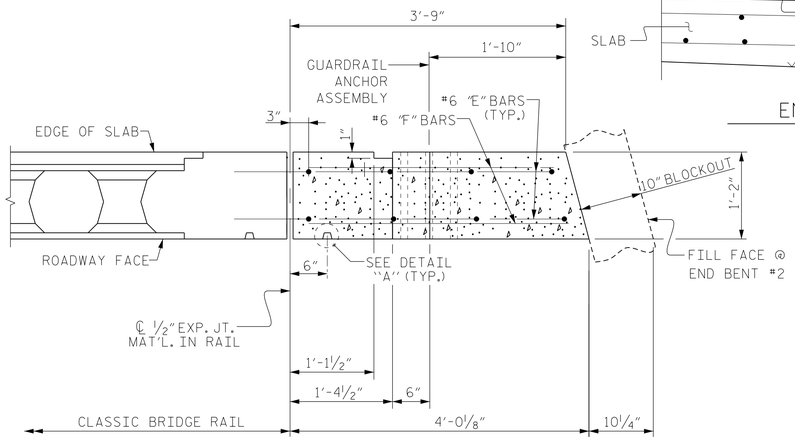

SECTION B-B

SHOWING STAGE I END BENT #2 END POST

PARTIAL PLAN

STAGE I SHOWN, STAGE II SIMILAR

BAR TYPES

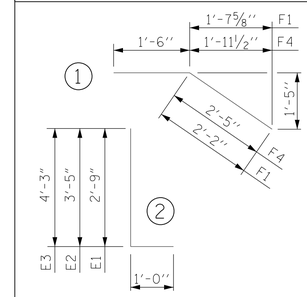

ALL BAR DIMENSIONS ARE OUT TO OUT

BILL OF MATERIAL

FOR CLASSIC BRIDGE RAILING ONLY

STAGE I CONSTRUCTION

BAR	NO.	SIZE	TYPE	LENGTH	WEIGHT
✳F1	2	#6	1	3'-8"	11
✳F2	2	#6	STR	2'-8"	8
✳F3	6	#6	STR	3'-4"	30
✳F4	2	#6	1	3'-11"	12
✳F5	2	#6	STR	2'-10"	9
✳F6	6	#6	STR	3'-6"	32
✳E1	4	#7	2	3'-9"	31
✳E2	4	#7	2	4'-5"	36
✳E3	8	#7	2	5'-3"	86

✳EPOXY COATED REINFORCING STEEL	255 LBS.
CLASS AA CONCRETE	1.3 CU. YDS.
CONCRETE BRIDGE RAIL	7.76 LIN. FT.

STAGE II CONSTRUCTION

BAR	NO.	SIZE	TYPE	LENGTH	WEIGHT
✳F1	2	#6	1	3'-8"	11
✳F2	2	#6	STR	2'-8"	8
✳F3	6	#6	STR	3'-4"	30
✳F4	2	#6	1	3'-11"	12
✳F5	2	#6	STR	2'-10"	9
✳F6	6	#6	STR	3'-6"	32
✳E1	4	#7	2	3'-9"	31
✳E2	4	#7	2	4'-5"	36
✳E3	8	#7	2	5'-3"	86

✳EPOXY COATED REINFORCING STEEL	255 LBS.
CLASS AA CONCRETE	1.3 CU. YDS.
CONCRETE BRIDGE RAIL	7.76 LIN. FT.

PROJECT NO. I-0914BA

VANCE COUNTY

STATION: 22+06.96 -Y1- POT

NORTH CAROLINA PROFESSIONAL SEAL 11725 ENGINEER DAVID A. RUGGLES

DocuSigned by: David Ruggles C462768DF412422... 11/17/2014

DWG. 31 OF 48

Firm License No. C-1051
421 Fayetteville St,
Suite 400
Raleigh, NC 27601
T 919.380.8750
www.stewartinc.com

STEWART

STATE OF NORTH CAROLINA
DEPARTMENT OF TRANSPORTATION
RALEIGH

END POST DETAILS

REVISIONS						SHEET NO.
NO.	BY:	DATE:	NO.	BY:	DATE:	S-31
1			3			TOTAL SHEETS
2			4			177

DRAWN BY:	J. LOFTUS	DATE :	09/14
CHECKED BY:	P. JACOB	DATE :	09/14
DESIGN ENGINEER OF RECORD:	D. RUGGLES	DATE :	09/14