NOTES

STIRRUPS TO BE PLACED VERTICALLY AND INVERTED ALTERNATELY.

STIRRUPS IN CAP MAY BE SHIFTED AS NECESSARY TO CLEAR ANCHOR BOLTS.

HOOKS ON "V" BARS MAY BE TURNED AS NECESSARY FOR PLACING REINFORCING STEEL.

FOR END ELEVATION DETAIL, SEE SHEET 2 OF 3.

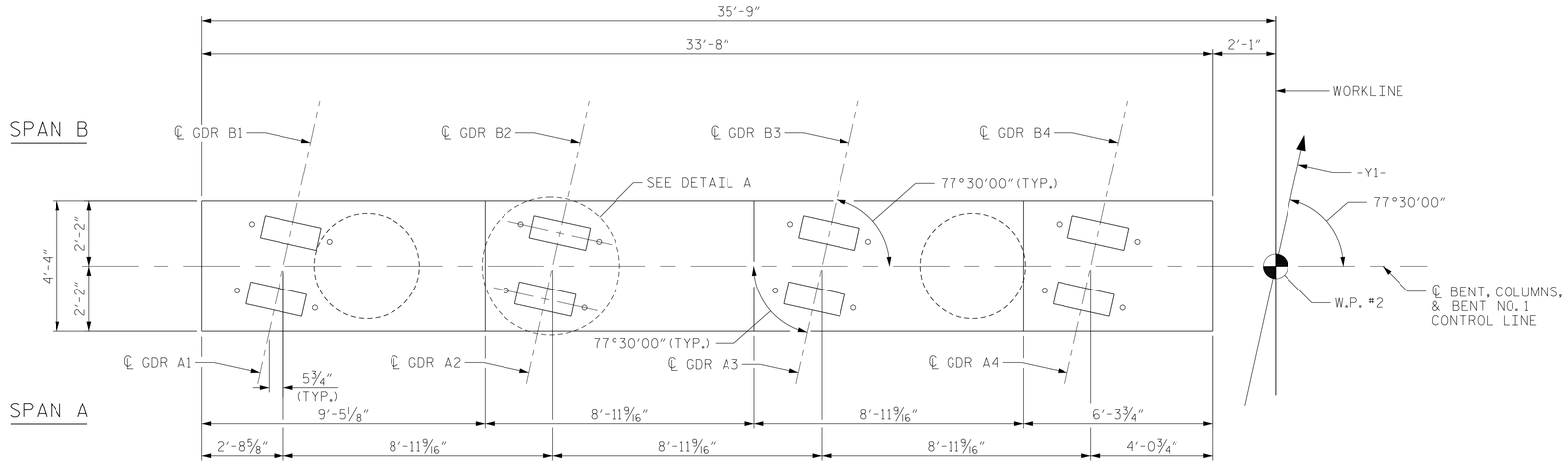

PLAN

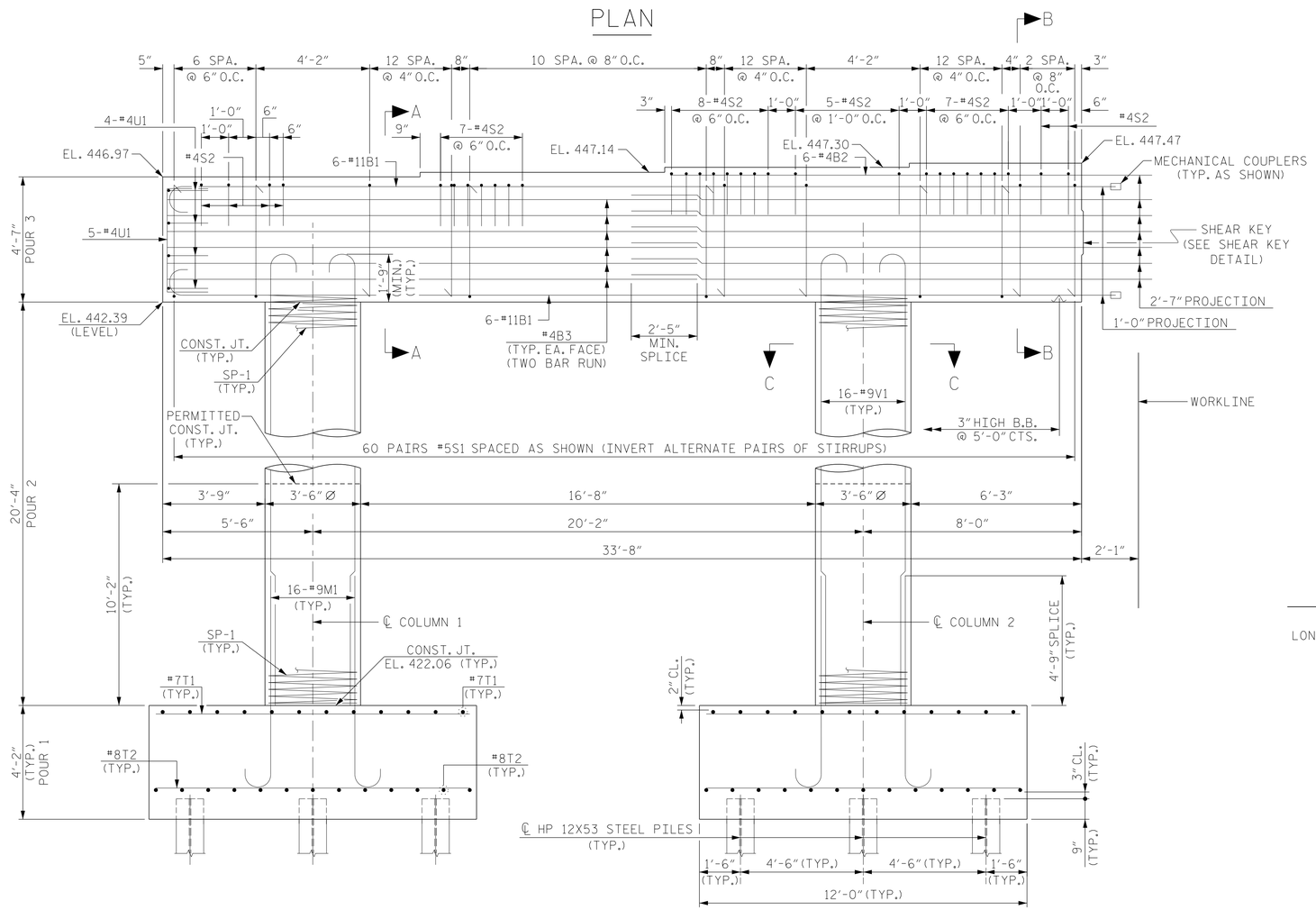

ELEVATION

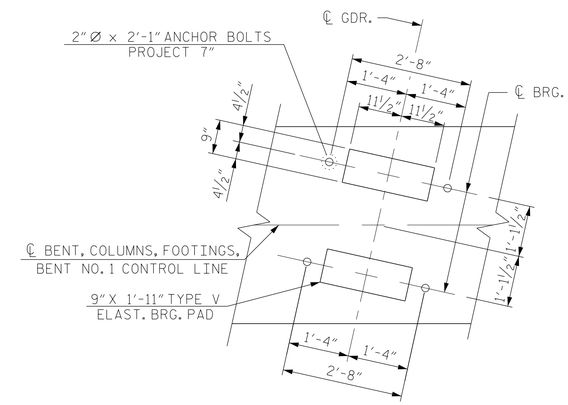

DETAIL A

(DIMENSIONS ARE TYPICAL EACH GIRDER)
COLUMNS NOT SHOWN FOR CLARITY

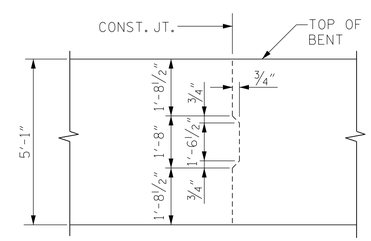

SHEAR KEY DETAIL

NOTE: REINFORCING STEEL IN BENT NOT SHOWN.
LONGITUDINAL STEEL SHALL BE CONTINUOUS THROUGH JOINT.

PROJECT NO. I-0914BA

VANCE COUNTY

STATION: 22+06.96 -Y1- POT

SHEET 1 OF 3

NORTH CAROLINA PROFESSIONAL SEAL 11725 ENGINEER DAVID A. RUGGLES

DocuSigned by: David Ruggles C462768DF412422... 11/17/2014

DWG. 39 OF 48

STATE OF NORTH CAROLINA
DEPARTMENT OF TRANSPORTATION
RALEIGH

BENT NO. 1

STAGE 1

STEWART

Firm License No. C-1051
421 Fayetteville St,
Suite 400
Raleigh, NC 27601
T 919.380.8750
www.stewartinc.com

REVISIONS						SHEET NO.
NO.	BY:	DATE:	NO.	BY:	DATE:	S-39
1			3			TOTAL SHEETS
2			4			177

DRAWN BY: P. JACOB	DATE : 08/14	
CHECKED BY: D. RUGGLES	DATE : 09/14	
DESIGN ENGINEER OF RECORD: D. RUGGLES	DATE : 09/14	