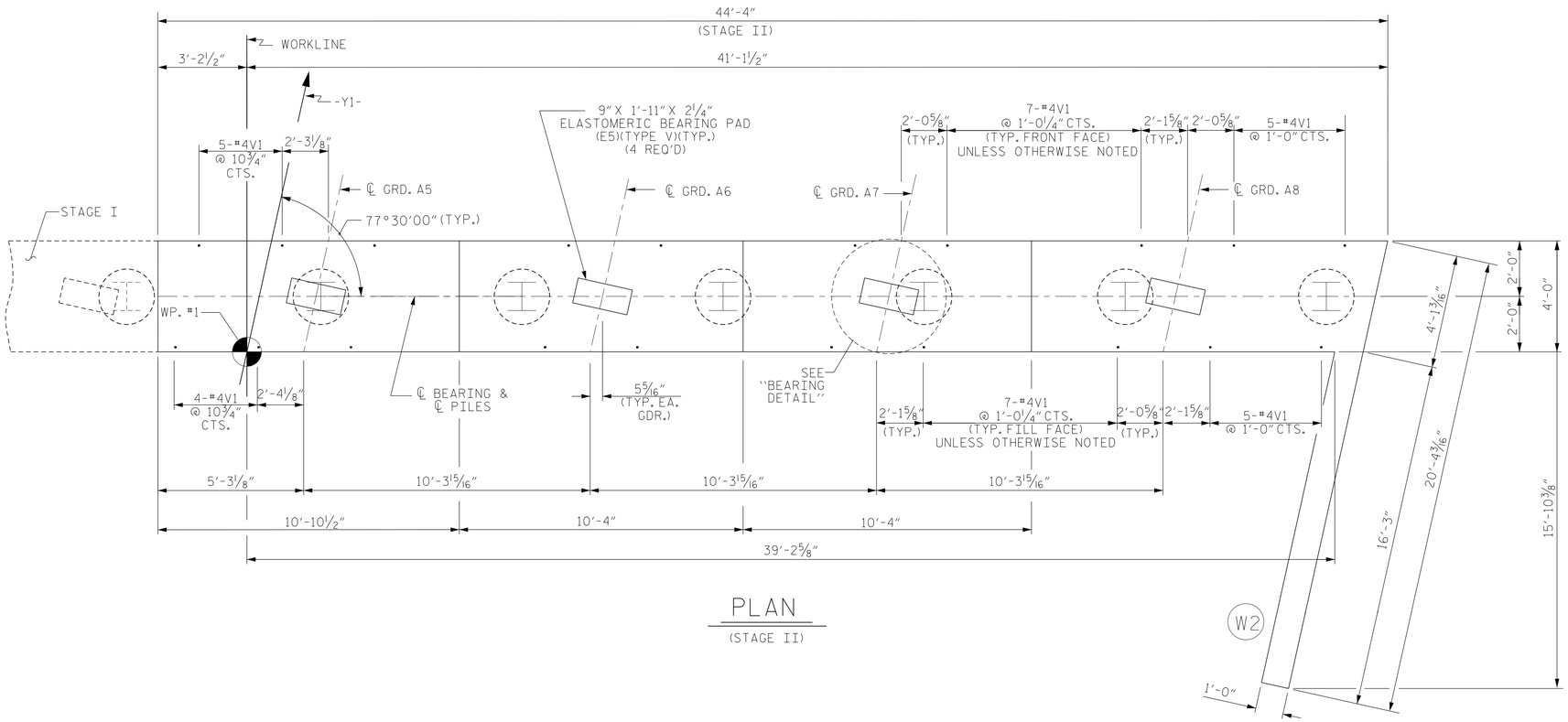

PLAN

(STAGE II)

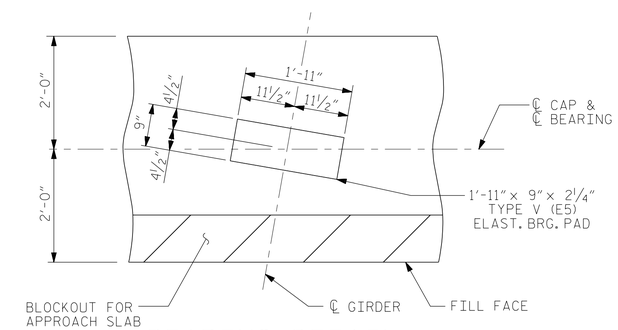

BEARING DETAIL

(DIMENSIONS ARE TYPICAL EACH GIRDER)
(HP 12X53 PILES NOT SHOWN FOR CLARITY)

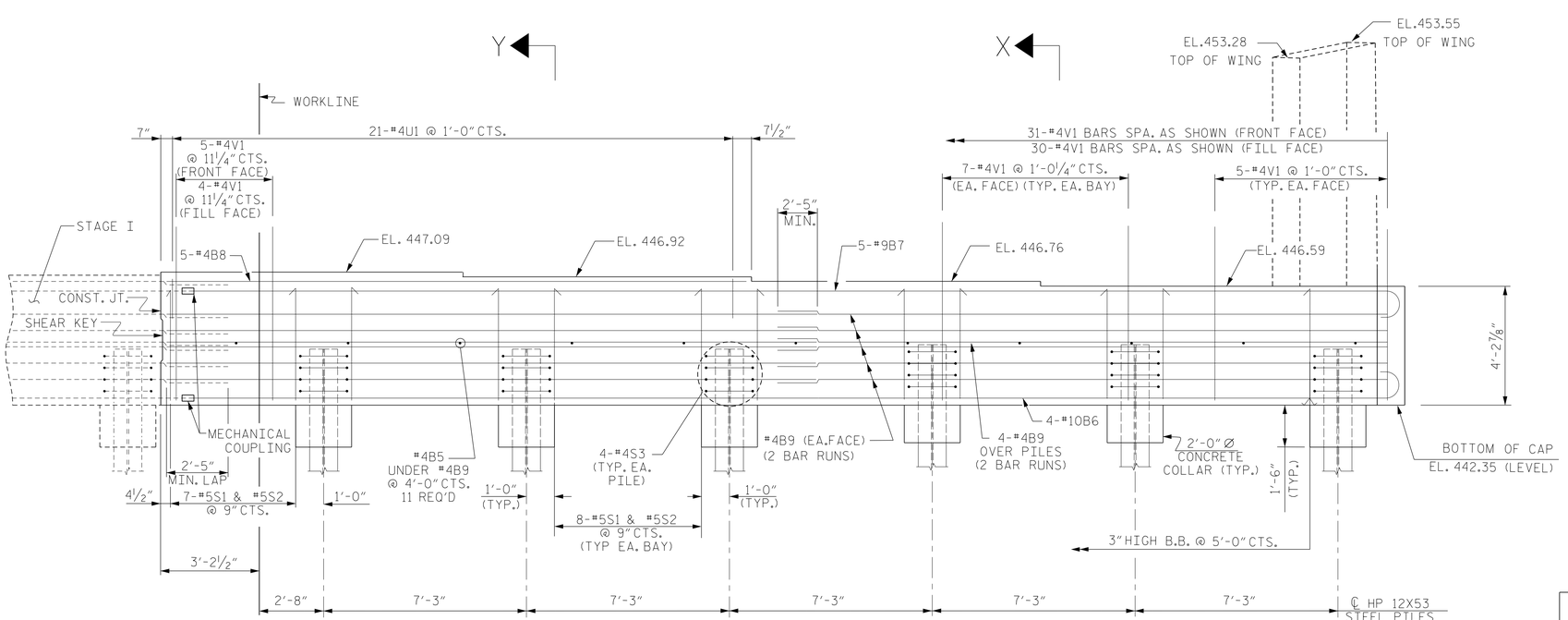

ELEVATION

(STAGE II)

PROJECT NO. I-0914BA

VANCE COUNTY

STATION: 22+06.96 -Y1- POT

SHEET 2 OF 4

NORTH CAROLINA PROFESSIONAL SEAL 11725 ENGINEER DAVID R. RUGGLES

DocuSigned by: David Ruggles C462768DF412422... 11/17/2014

DWG. 36 OF 48

STATE OF NORTH CAROLINA
DEPARTMENT OF TRANSPORTATION
RALEIGH

INTEGRAL END BENT NO. 1 STAGE II

STEWART

Firm License No. C-1051
421 Fayetteville St,
Suite 400
Raleigh, NC 27601
T 919.380.8750
www.stewartinc.com

REVISIONS						SHEET NO.
NO.	BY:	DATE:	NO.	BY:	DATE:	S-36
1			3			TOTAL SHEETS
2			4			177

DRAWN BY: H.ASSFOURA	DATE : 08/14	
CHECKED BY: P.JACOB	DATE : 09/14	
DESIGN ENGINEER OF RECORD: D. RUGGLES	DATE : 09/14	