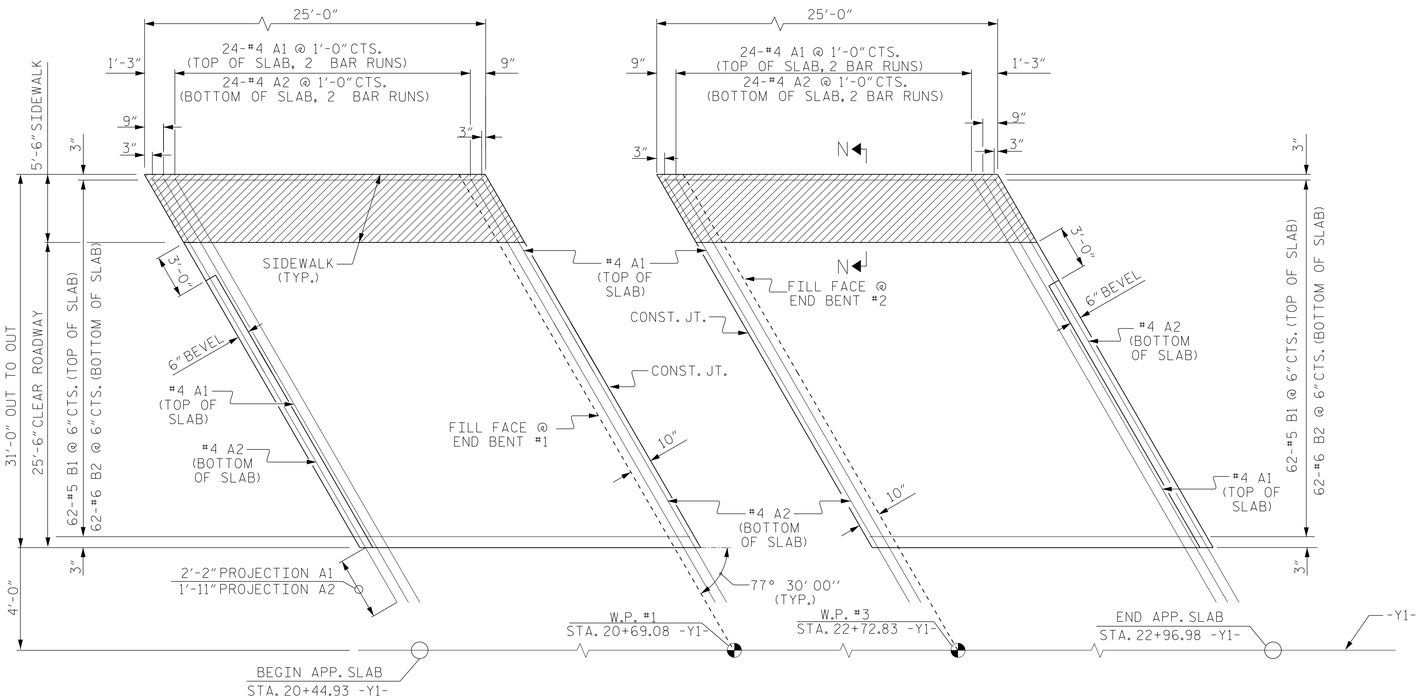

PLAN @ END BENT #1

PLAN @ END BENT #2

STAGE I

DIMENSIONS SHOWN ARE TYPICAL FOR BOTH APPROACH SLABS

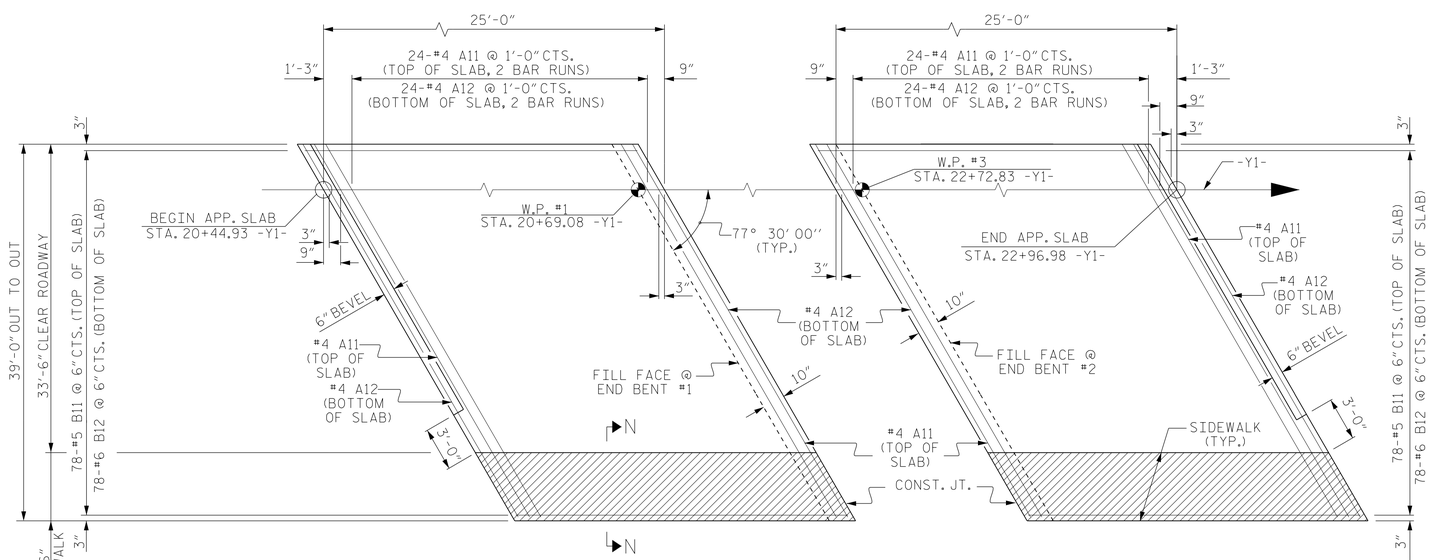

PLAN @ END BENT #1

PLAN @ END BENT #2

STAGE II

DIMENSIONS SHOWN ARE TYPICAL FOR BOTH APPROACH SLABS

BAR TYPES

ALL DIMENSIONS ARE OUT TO OUT

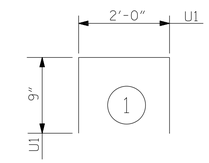

BILL OF MATERIAL

STAGE I

FOR ONE APPROACH SLAB (2 REQ'D)

BAR	NO.	SIZE	TYPE	LENGTH	WEIGHT
* A1	52	#4	STR	17'-10"	619
A2	52	#4	STR	17'-7"	611
* B1	62	#5	STR	24'-3"	1568
B2	62	#6	STR	24'-6"	2282
* B3	5	#4	STR	24'-6"	82
* G1	26	#4	STR	5'-0"	87
* U1	8	#4	1	3'-6"	19

REINFORCING STEEL 2893 LBS.

* EPOXY COATED REINFORCING STEEL 2375 LBS.

CLASS AA CONCRETE
POUR 1 33.5 C.Y.
POUR 2 (SIDEWALK) 3.1 C.Y.
TOTAL 36.6 C.Y.

STAGE II

FOR ONE APPROACH SLAB (TWO REQ'D)

BAR	NO.	SIZE	TYPE	LENGTH	WEIGHT
* A11	52	#4	STR	20'-11"	727
A12	52	#4	STR	20'-9"	721
* B11	78	#5	STR	24'-3"	1973
B12	78	#6	STR	24'-6"	2870
* B3	5	#4	STR	24'-6"	82
* G1	26	#4	STR	5'-0"	87
* U1	8	#4	1	3'-6"	19

REINFORCING STEEL 3591 LBS.

* EPOXY COATED REINFORCING STEEL 2888 LBS.

CLASS AA CONCRETE
POUR 1 42.1 C.Y.
POUR 2 (SIDEWALK) 3.1 C.Y.
TOTAL 45.2 C.Y.

SPLICE LENGTHS

BAR SIZE	EPOXY COATED	UNCOATED
#4	2'-0"	1'-9"
#5	2'-6"	2'-2"
#6	3'-10"	2'-7"

NOTES

APPROACH SLAB SHALL NOT BE CONSTRUCTED PRIOR TO COMPLETION OF THE BRIDGE DECK.

FOR REINFORCED BRIDGE APPROACH FILL FABRIC WALL INCLUDING GEOTEXTILE, IMPERMEABLE GEOMEMBRANE, 4" Ø DRAINAGE PIPE, #78M STONE, WELDED WIRE FORM, AND SELECT MATERIAL, SEE ROADWAY PLANS.

AREA BETWEEN THE WINGWALL AND APPROACH SLAB SHALL BE GRADED TO DRAIN THE WATER AWAY FROM THE FILL FACE OF THE BRIDGE AND SHALL BE PAVED. SEE ROADWAY PLANS.

THE JOINT OPENING AT THE APPROACH SLAB/DECK INTERFACE SHALL BE SAWED NO MORE THAN 12 HOURS AFTER THE APPROACH SLAB IS CAST. THE JOINT SHALL BE CLEANED OF ALL DEBRIS BEFORE THE SEALANT IS APPLIED. THE JOINT SEALER MATERIAL SHALL CONFORM TO THE REQUIREMENTS OF SECTION 1028-3 OF THE STANDARD SPECIFICATIONS.

PROJECT NO. I-0914BA

VANCE COUNTY

STATION: 22+06.96 -Y1- POT

SHEET 1 OF 2

NORTH CAROLINA PROFESSIONAL SEAL 11725 ENGINEER DAVID R. RUGGLES

DocuSigned by: David Ruggles C462768DF412422... 11/17/2014

DWG. 47 OF 48

STATE OF NORTH CAROLINA
DEPARTMENT OF TRANSPORTATION
RALEIGH

STANDARD

BRIDGE APPROACH SLAB FOR INTEGRAL ABUTMENT

STEWART

Firm License No. C-1051
421 Fayetteville St,
Suite 400
Raleigh, NC 27601
T 919.380.8750
www.stewartinc.com

REVISIONS						SHEET NO.
NO.	BY:	DATE:	NO.	BY:	DATE:	S-47
1			3			TOTAL SHEETS
2			4			177

DRAWN BY:	H.ASSFOURA	DATE :	08/14
CHECKED BY:	D. RUGGLES	DATE :	09/14
DESIGN ENGINEER OF RECORD:	D. RUGGLES	DATE :	09/14

STD. NO. BAS5 (SHT 2a)