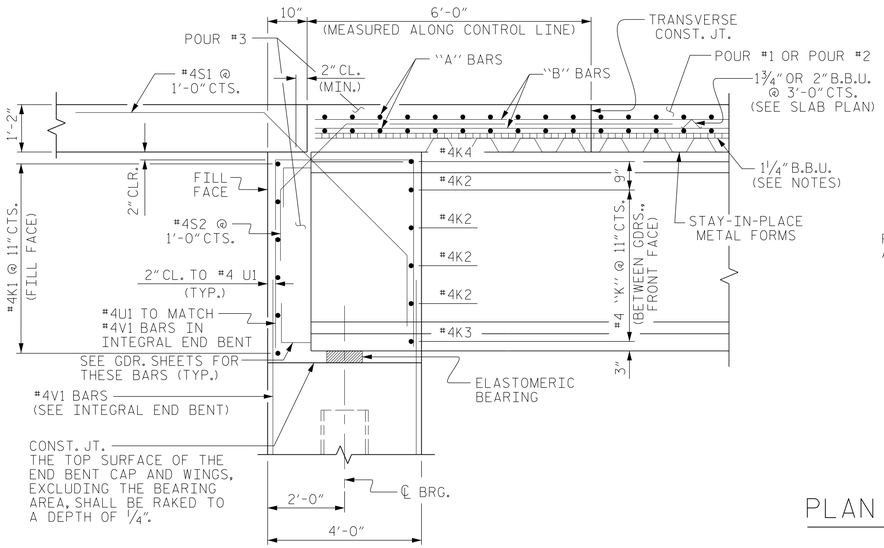

END OF GIRDER DETAIL AT INTEGRAL END BENTS

BETWEEN GIRDERS SHOWN, OUTSIDE OF GIRDERS SIMILIAR
STAGE I SHOWN, STAGE II SIMILIAR

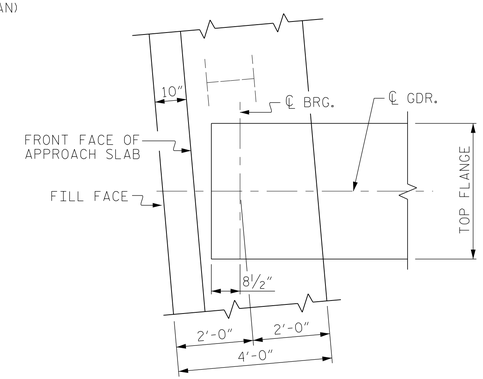

PLAN OF GIRDER AT INTEGRAL END BENT No. 1

PLAN OF GIRDER AT INTEGRAL END No. 2 IS SIMILIAR

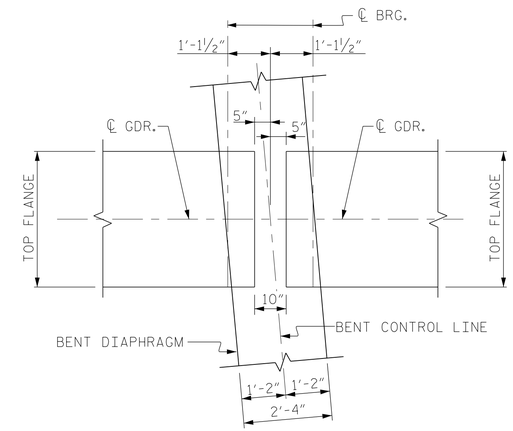

PLAN OF GIRDER AT BENT

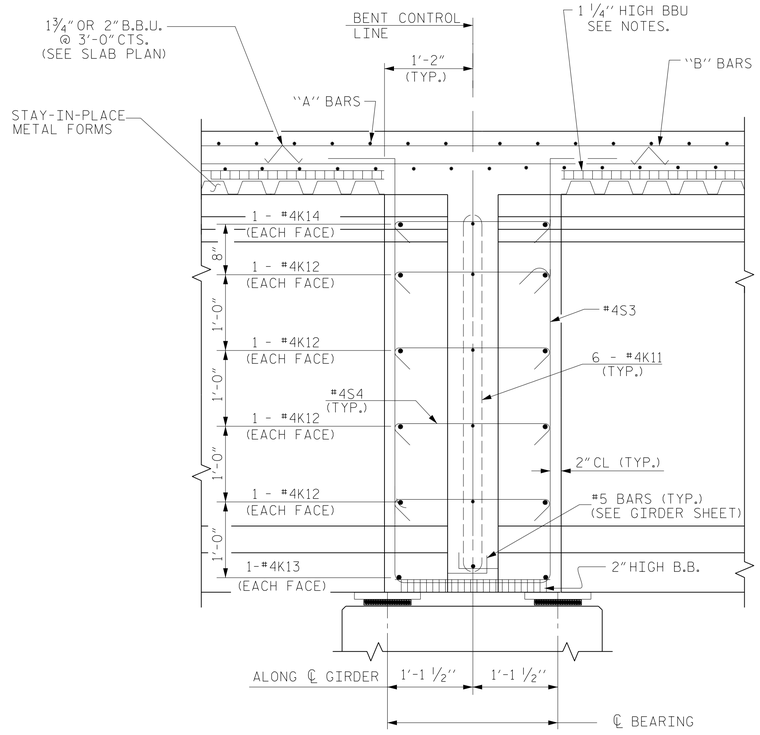

SECTION THROUGH BENT DIAPHRAGM

STAGE I SHOWN, STAGE II SIMILIAR

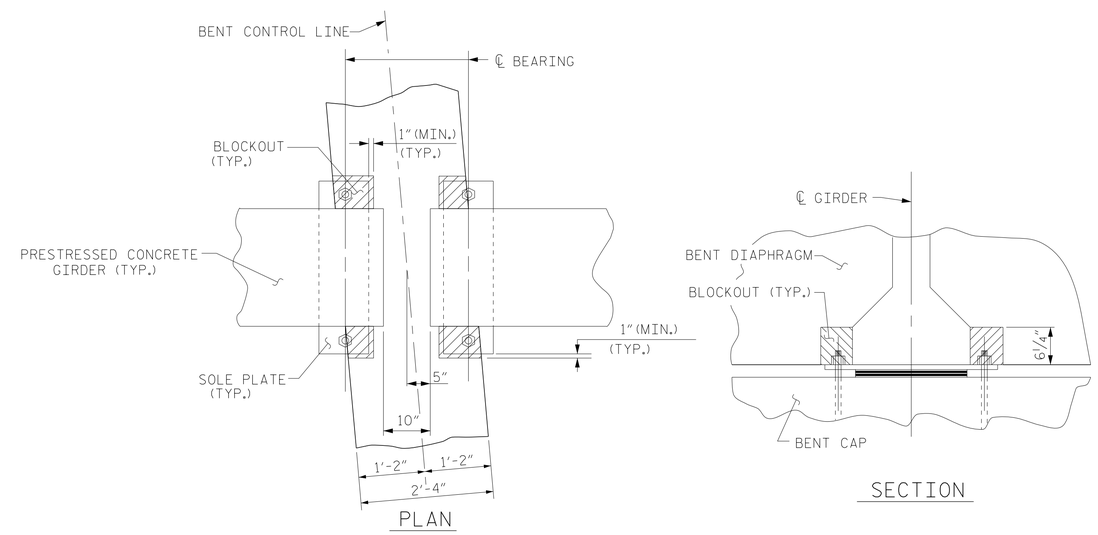

BENT DIAPHRAGM BLOCK-OUT DETAIL

PROJECT NO. I-0914BA
VANCE COUNTY
STATION: 22+06.96 -Y1- POT

SHEET 3 OF 3

STATE OF NORTH CAROLINA
DEPARTMENT OF TRANSPORTATION
RALEIGH

TYPICAL SECTION DETAILS

NORTH CAROLINA PROFESSIONAL SEAL 11725 ENGINEER DAVID R. RUGGLES

DocuSigned by: David Ruggles C402768DF412422... 11/17/2014

DWG. 10 OF 48

STEWART
Firm License No. C-1051
421 Fayetteville St,
Suite 400
Raleigh, NC 27601
T 919.380.8750
www.stewartinc.com

REVISIONS						SHEET NO.
NO.	BY:	DATE:	NO.	BY:	DATE:	S-10
1			3			TOTAL SHEETS
2			4			177

DRAWN BY:	J. LOFTUS	DATE :	08/14
CHECKED BY:	D. RUGGLES	DATE :	09/14
DESIGN ENGINEER OF RECORD:	D. RUGGLES	DATE :	09/14