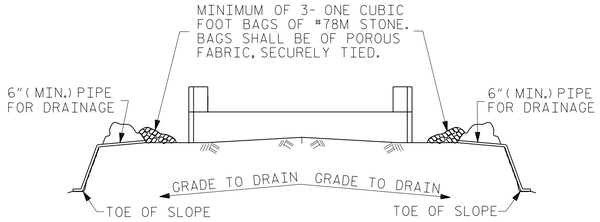

BAGGED STONE AND PIPE SHALL BE PLACED IMMEDIATELY AFTER COMPLETION OF END BENT EXCAVATION. PIPE MAY BE EITHER CONCRETE, CORRUGATED STEEL, CORRUGATED ALUMINUM ALLOY, OR CORRUGATED PLASTIC. PERFORATED PIPE WILL NOT BE ALLOWED.

BAGGED STONE SHALL REMAIN IN PLACE UNTIL THE ENGINEER DIRECTS THAT IT BE REMOVED. THE CONTRACTOR SHALL REMOVE AND DISPOSE OF SILT ACCUMULATIONS AT BAGGED STONE WHEN SO DIRECTED BY THE ENGINEER. BAGS SHALL BE REMOVED AND REPLACED WHENEVER THE ENGINEER DETERMINES THAT THEY HAVE DETERIORATED AND LOST THEIR EFFECTIVENESS.

NO SEPARATE PAYMENT WILL BE MADE FOR THIS WORK AND THE ENTIRE COST OF THIS WORK SHALL BE INCLUDED IN THE UNIT CONTRACT PRICE BID FOR THE SEVERAL PAY ITEMS.

TEMPORARY DRAINAGE AT END BENT

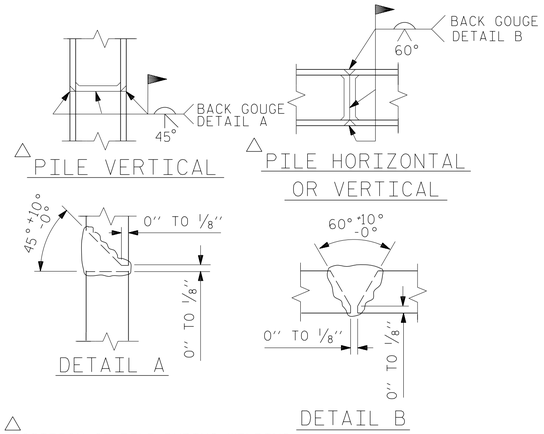

△ POSITION OF PILE DURING WELDING.

PILE SPLICE DETAILS

BAR TYPES

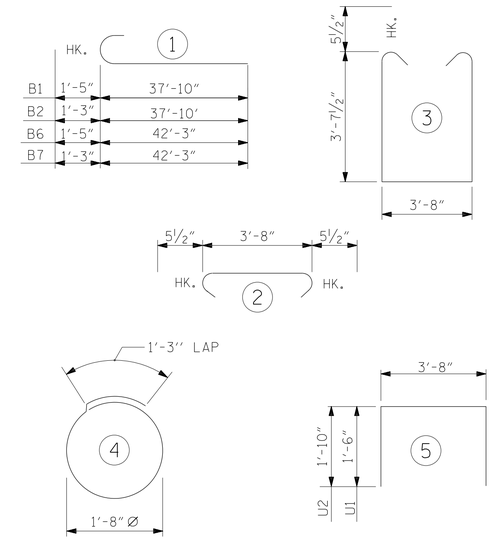

ALL BAR DIMENSIONS ARE OUT TO OUT.

END BENT No. 2 - STAGE I	END BENT No. 2 - STAGE II
HP 12 X 53 STEEL PILES	HP 12 X 53 STEEL PILES
NO: 6 LIN. FT.= 180	NO: 6 LIN. FT.= 150
STEEL PILE POINTS 6 EA.	STEEL PILE POINTS 6 EA.

BILL OF MATERIAL FOR ONE END BENT

BAR	NO.	SIZE	TYPE	LENGTH	WEIGHT
STAGE I					
B1	4	#10	1	39'-3"	676
B2	5	#9	1	39'-1"	664
B3	5	#4	STR	27'-4"	91
B4	28	#4	STR	21'-0"	393
B5	9	#4	STR	3'-8"	22
S1	42	#5	2	4'-7"	201
S2	42	#5	3	11'-10"	518
S3	24	#4	4	6'-6"	104
U1	25	#4	5	6'-8"	111
V1	49	#4	STR	6'-11"	226
V2	39	#4	STR	6'-5"	167
H1	18	#5	STR	19'-9"	371

REINFORCING STEEL
END BENT NO. 2 STAGE I 3544 LB.

CLASS A CONCRETE
CAP, LOWER PART OF WINGS & COLLAR 28.1 C.Y.

BAR	NO.	SIZE	TYPE	LENGTH	WEIGHT
STAGE II					
B5	11	#4	STR	3'-8"	27
B6	4	#10	1	43'-8"	752
B7	5	#9	1	43'-6"	740
B8	5	#4	STR	20'-11"	70
B9	5	#4	STR	10-6"	35
B10	28	#4	STR	22'-10"	427
S1	48	#5	2	4'-7"	229
S2	48	#5	3	11'-10"	592
S3	24	#4	4	6'-6"	104
U2	21	#4	5	7'-4"	103
V1	61	#4	STR	6'-11"	282
V2	37	#4	STR	6'-5"	159
H2	16	#5	STR	19'-3"	321

REINFORCING STEEL
END BENT NO. 2 STAGE II 3841 LB.

CLASS A CONCRETE
CAP, LOWER PART OF WINGS & COLLAR 31.8 C.Y

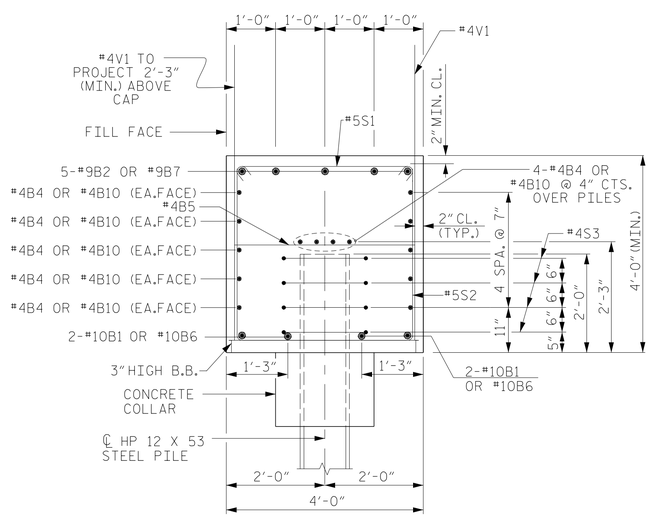

SECTION X-X

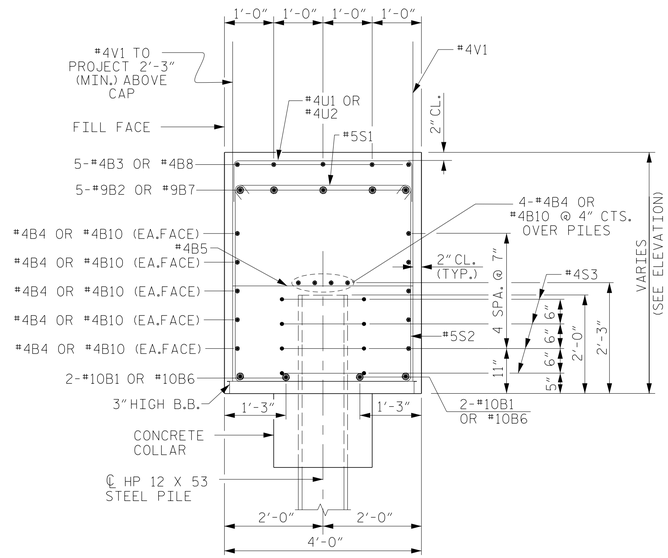

SECTION Y-Y

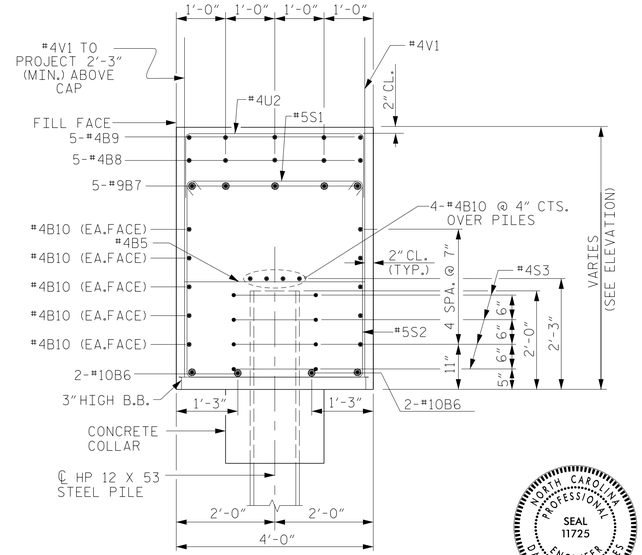

SECTION Z-Z

PROJECT NO. I-0914BA

VANCE COUNTY

STATION: 22+06.96 -Y1- POT

SHEET 4 OF 4

NORTH CAROLINA PROFESSIONAL SEAL 11725 ENGINEER DAVID R. RUGGLES

DocuSigned by: David Ruggles C462768DF412422... 11/17/2014

DWG. 45 OF 48

Firm License No. C-1051
421 Fayetteville St,
Suite 400
Raleigh, NC 27601
T 919.380.8750
www.stewartinc.com
STEWART

STATE OF NORTH CAROLINA
DEPARTMENT OF TRANSPORTATION
RALEIGH

END BENT NO. 2 DETAILS

REVISIONS							SHEET NO.
NO.	BY:	DATE:	NO.	BY:	DATE:		S-45
1			3				TOTAL SHEETS
2			4				177

DRAWN BY:	H.ASSFOURA	DATE :	08/14
CHECKED BY:	P.JACOB	DATE :	09/14
DESIGN ENGINEER OF RECORD:	D. RUGGLES	DATE :	09/14