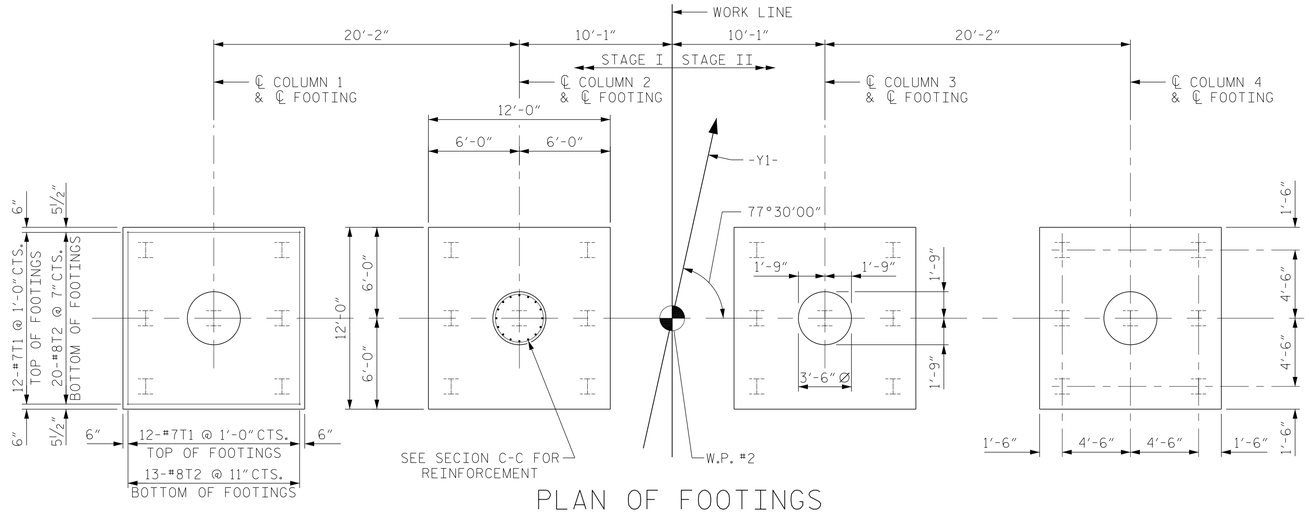

PLAN OF FOOTINGS

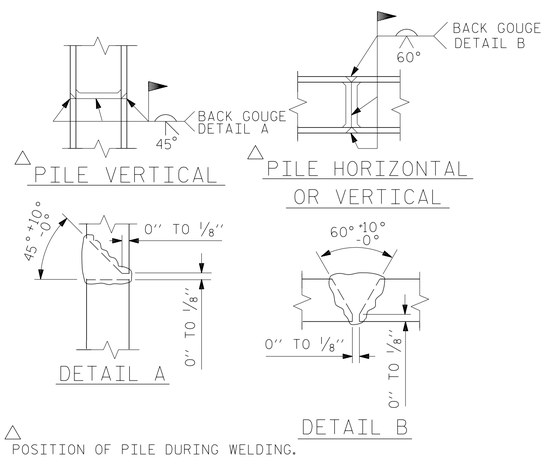

△ POSITION OF PILE DURING WELDING.

PILE SPLICE DETAILS

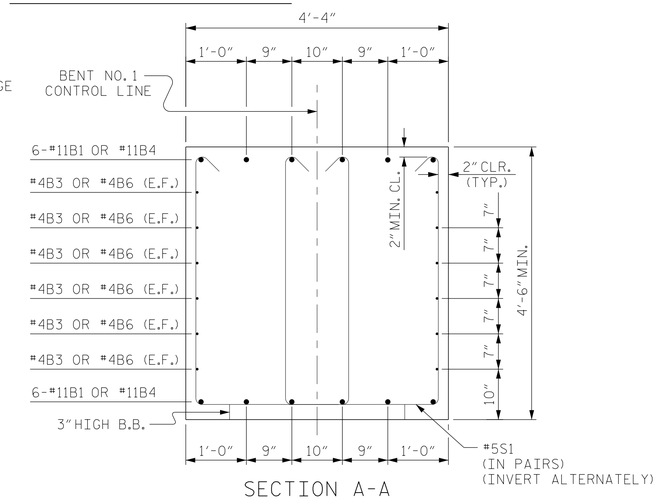

SECTION A-A

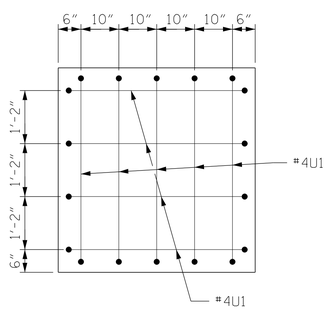

END OF CAP VIEW

(TYPICAL BOTH ENDS)

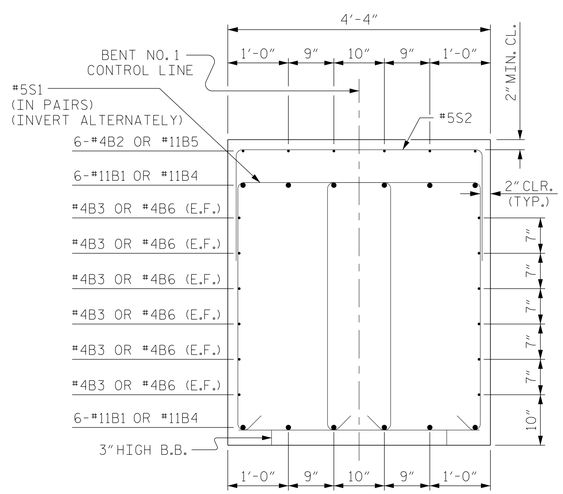

SECTION B-B

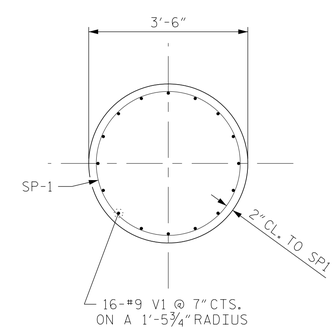

SECTION C-C

BAR TYPES

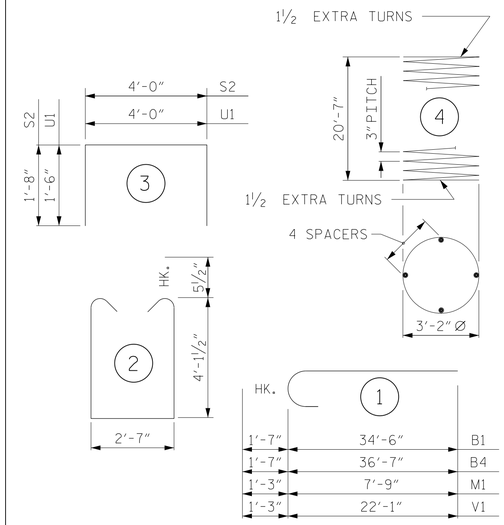

ALL BAR DIMENSIONS ARE OUT TO OUT

STAGE I QUANTITIES

REINFORCING STEEL		11,029	LBS.
SPIRAL COLUMN REINFORCING STEEL		1,120	LBS.
CLASS A CONCRETE			
POUR #1 (PILE FOOTING)		44.4	C.Y.
POUR #2 (COLUMNS)		14.5	C.Y.
POUR #3 (CAP)		26.0	C.Y.
TOTAL CLASS A CONCRETE		84.9	C.Y.
FOUNDATION EXCAVATION		LUMP SUM	
HP12X53 STEEL PILES	No.: 14	140	LIN. FT.
STEEL PILE POINTS		14	EA.

STAGE II QUANTITIES

REINFORCING STEEL		11,328	LBS.
SPIRAL COLUMN REINFORCING STEEL		1,120	LBS.
CLASS A CONCRETE			
POUR #1 (PILE FOOTING)		44.4	C.Y.
POUR #2 (COLUMNS)		14.5	C.Y.
POUR #3 (CAP)		29.0	C.Y.
TOTAL CLASS A CONCRETE		87.9	C.Y.
FOUNDATION EXCAVATION		LUMP SUM	
HP12X53 STEEL PILES	No.: 14	140	LIN. FT.
STEEL PILE POINTS		14	EA.
PILE EXCAVATION		140	LIN. FT.

BILL OF MATERIAL

FOR STAGE I

BAR	NO.	SIZE	TYPE	LENGTH	WEIGHT
B1	12	#11	1	36'-1"	2301
B2	6	#4	STR	17'-8"	71
B3	24	#4	STR	19'-3"	309
M1	32	#9	1	9'-0"	979
S1	120	#5	2	11'-9"	1471
S2	33	#4	3	7'-4"	162
T1	48	#7	STR.	11'-6"	1128
T2	66	#8	STR.	11'-6"	2027
U1	9	#4	3	7'-0"	42
V1	32	#9	1	23'-4"	2539
				TOTAL	11,029
SP-1	2	✱✱	4	838'-4"	1120

FOR STAGE II

BAR	NO.	SIZE	TYPE	LENGTH	WEIGHT
B4	12	#11	1	38'-2"	2433
B5	6	#4	STR	16'-4"	65
B6	24	#4	STR	20'-0"	321
M1	32	#9	1	9'-0"	979
S1	132	#5	2	11'-9"	1618
S2	36	#4	3	7'-4"	176
T1	48	#7	STR.	11'-6"	1128
T2	66	#8	STR.	11'-6"	2027
U1	9	#4	3	7'-0"	42
V1	32	#9	1	23'-4"	2539
				TOTAL	11,328
SP-1	2	✱✱	4	838'-4"	1120

✱✱ THE SP-1 SPIRAL REINFORCING STEEL SHALL BE W20 OR D-20 COLD DRAWN WIRE OR #4PLAIN OR DEFORMED BAR

PROJECT NO. I-0914BA

VANCE COUNTY

STATION: 22+06.96 -Y1- POT

SHEET 3 OF 3

NORTH CAROLINA PROFESSIONAL SEAL 11725 ENGINEER DAVID R. RUGGLES

DocuSigned by: David Ruggles C4627680DF412422... 11/17/2014

DWG. 41 OF 48

STEWART

Firm License No. C-1051
421 Fayetteville St,
Suite 400
Raleigh, NC 27601
T 919.380.8750
www.stewartinc.com

STATE OF NORTH CAROLINA
DEPARTMENT OF TRANSPORTATION
RALEIGH

BENT NO. 1 DETAILS

REVISIONS						SHEET NO.
NO.	BY:	DATE:	NO.	BY:	DATE:	S-41
1			3			TOTAL SHEETS
2			4			177

DRAWN BY: P. JACOB DATE: 08/14
CHECKED BY: D. RUGGLES DATE: 09/14
DESIGN ENGINEER OF RECORD: D. RUGGLES DATE: 09/14