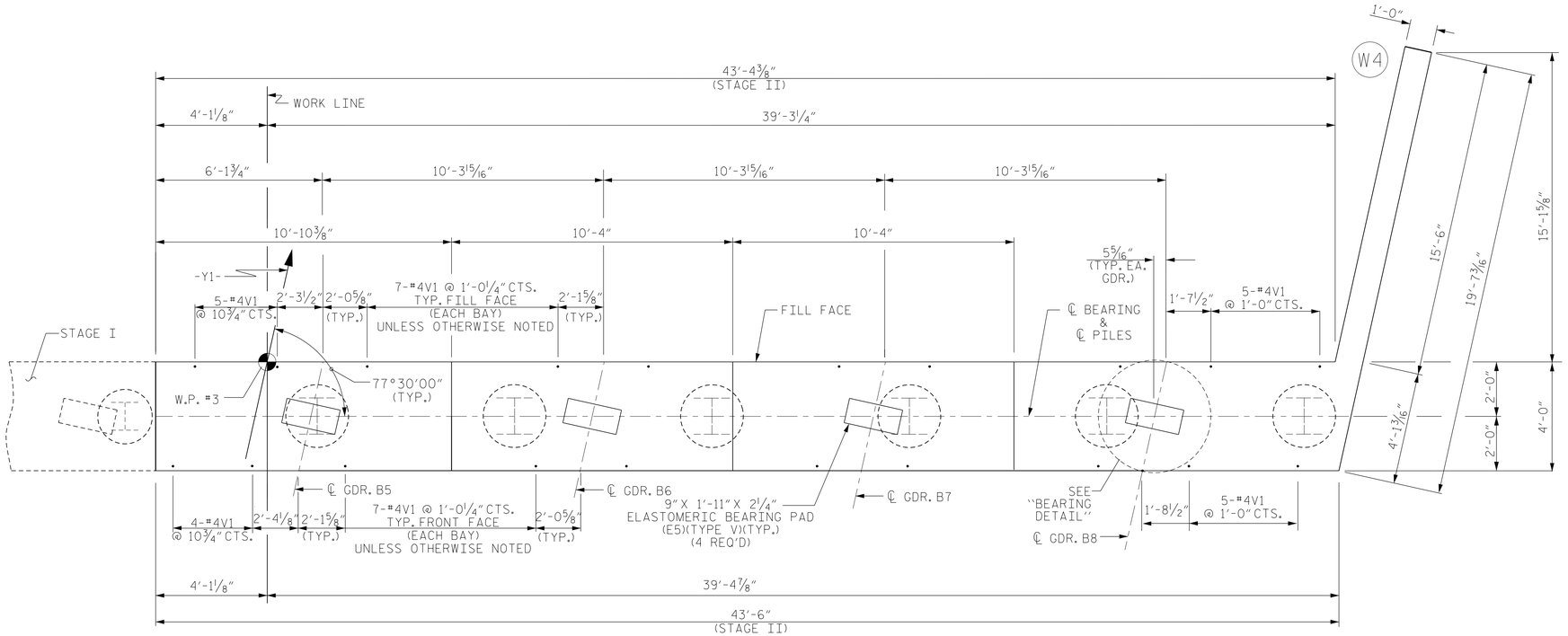

PLAN

(STAGE II)

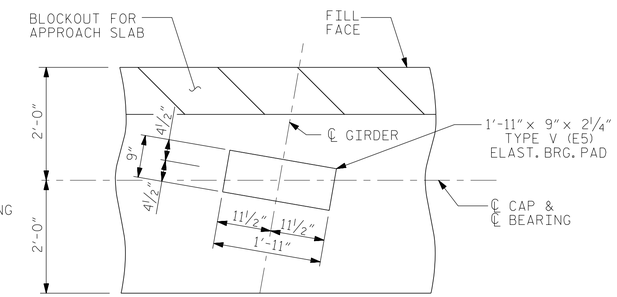

BEARING DETAIL

(DIMENSIONS ARE TYPICAL EACH GIRDER)
(HP 12X53 PILES NOT SHOWN FOR CLARITY)

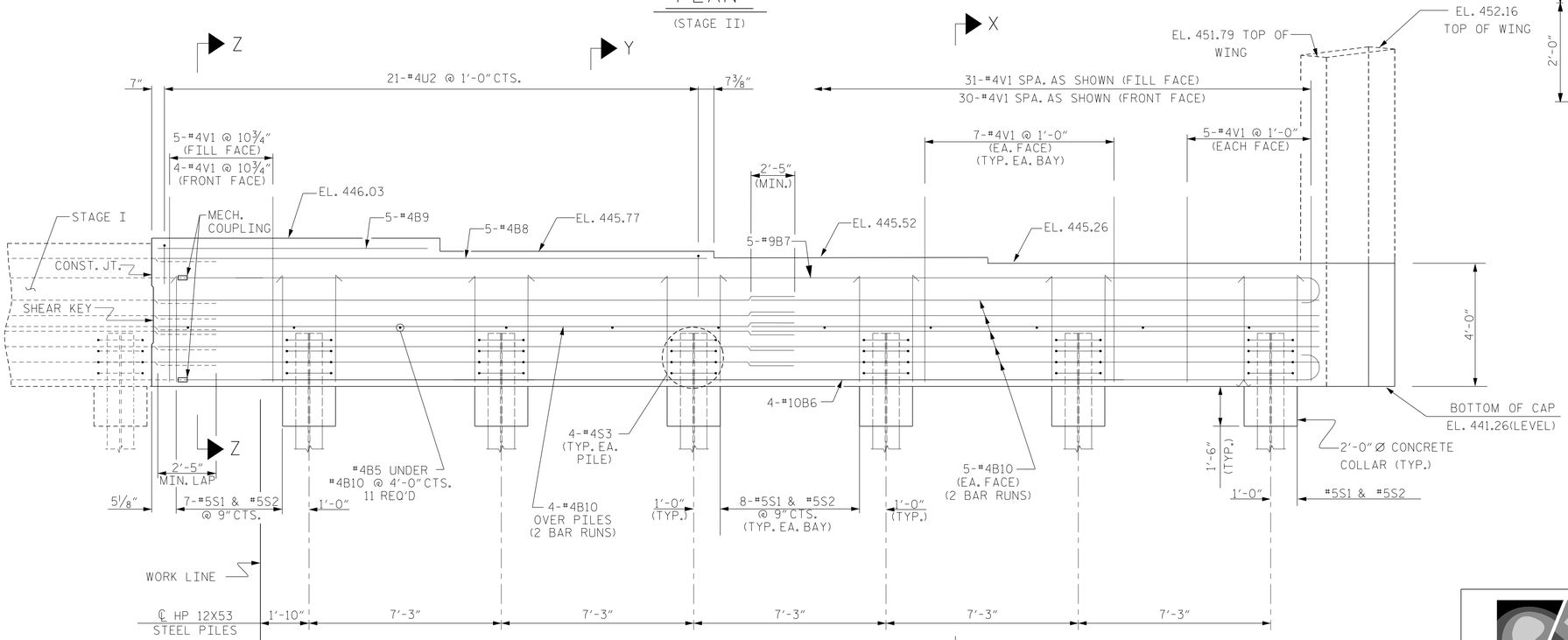

ELEVATION

(STAGE II)

PROJECT NO. I-0914BA

VANCE COUNTY

STATION: 22+06.96 -Y1- POT

SHEET 2 OF 4

NORTH CAROLINA PROFESSIONAL SEAL 11725 ENGINEER DAVID R. RUGGLES

DocuSigned by: David Ruggles C462768DF412422... 11/17/2014

DWG. 43 OF 48

STATE OF NORTH CAROLINA
DEPARTMENT OF TRANSPORTATION
RALEIGH

INTEGRAL END BENT NO. 2 STAGE II

STEWART

Firm License No. C-1051
421 Fayetteville St,
Suite 400
Raleigh, NC 27601
T 919.380.8750
www.stewartinc.com

REVISIONS								SHEET NO.
NO.	BY:	DATE:	NO.	BY:	DATE:			S-43
1			3					TOTAL SHEETS
2			4					177

DRAWN BY:	H.ASSFOURA	DATE :	08/14
CHECKED BY:	P.JACOB	DATE :	09/14
DESIGN ENGINEER OF RECORD:	D.RUGGLES	DATE :	09/14