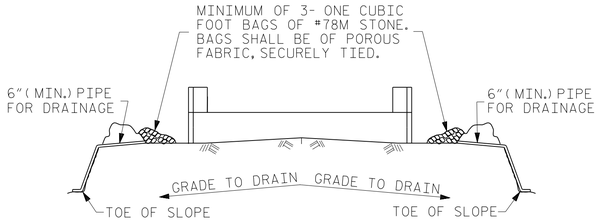

BAGGED STONE AND PIPE SHALL BE PLACED IMMEDIATELY AFTER COMPLETION OF END BENT EXCAVATION. PIPE MAY BE EITHER CONCRETE, CORRUGATED STEEL, CORRUGATED ALUMINUM ALLOY, OR CORRUGATED PLASTIC. PERFORATED PIPE WILL NOT BE ALLOWED.

BAGGED STONE SHALL REMAIN IN PLACE UNTIL THE ENGINEER DIRECTS THAT IT BE REMOVED. THE CONTRACTOR SHALL REMOVE AND DISPOSE OF SILT ACCUMULATIONS AT BAGGED STONE WHEN SO DIRECTED BY THE ENGINEER. BAGS SHALL BE REMOVED AND REPLACED WHENEVER THE ENGINEER DETERMINES THAT THEY HAVE DETERIORATED AND LOST THEIR EFFECTIVENESS.

NO SEPARATE PAYMENT WILL BE MADE FOR THIS WORK AND THE ENTIRE COST OF THIS WORK SHALL BE INCLUDED IN THE UNIT CONTRACT PRICE BID FOR THE SEVERAL PAY ITEMS.

TEMPORARY DRAINAGE AT END BENT

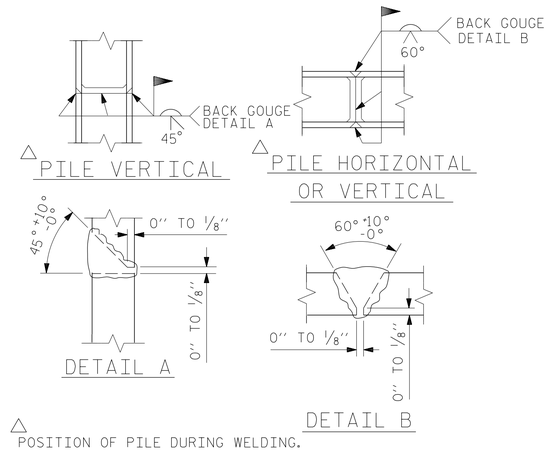

△ POSITION OF PILE DURING WELDING.

PILE SPLICE DETAILS

BAR TYPES

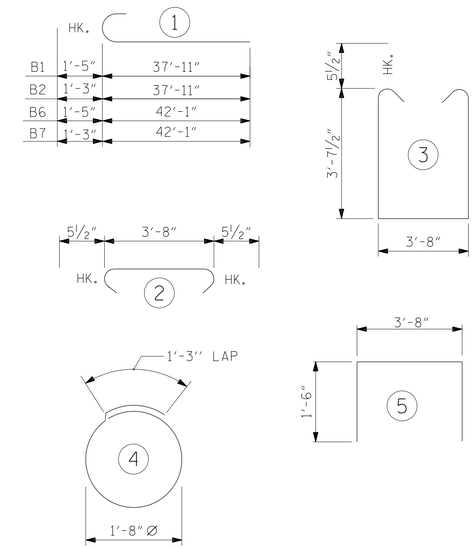

ALL BAR DIMENSIONS ARE OUT TO OUT.

END BENT No. 1 - STAGE I	
HP 12 X 53 STEEL PILES	
NO: 6	LIN. FT.= 210

END BENT No.1 - STAGE II	
HP 12 X 53 STEEL PILES	
NO: 6	LIN. FT.= 210

BILL OF MATERIAL FOR END BENT NO. 1

BAR	NO.	SIZE	TYPE	LENGTH	WEIGHT
STAGE I					
B1	4	#10	1	39'-4"	677
B2	5	#9	1	39'-2"	666
B3	5	#4	STR	18'-5"	62
B4	28	#4	STR	21'-0"	393
B5	9	#4	STR	3'-8"	22
S1	42	#5	2	4'-7"	201
S2	42	#5	3	11'-10"	518
S3	24	#4	4	6'-6"	104
U1	16	#4	5	6'-8"	71
V1	47	#4	STR	6'-9"	212
V2	37	#4	STR	6'-6"	161
H1	16	#5	STR	19-3"	321

REINFORCING STEEL FOR END BENT No. 1 STAGE I 3408 LB.

CLASS A CONCRETE CAP, LOWER PART OF WINGS & COLLARS 26.5 C.Y.

BAR	NO.	SIZE	TYPE	LENGTH	WEIGHT
STAGE II					
B5	11	#4	STR	3'-8"	27
B6	4	#10	1	43'-6"	749
B7	5	#9	1	43'-4"	737
B8	5	#4	STR	20'-11"	70
B9	28	#4	STR	22'-10"	427
S1	47	#5	2	4'-7"	225
S2	47	#5	3	11'-10"	580
S3	24	#4	4	6'-6"	104
U1	21	#4	5	6'-8"	94
V1	61	#4	STR	6'-9"	275
V2	39	#4	STR	6'-6"	169
H2	18	#5	STR	19'-9"	371

REINFORCING STEEL FOR END BENT No. 1 STAGE II 3828 LB.

CLASS A CONCRETE CAP, LOWER PART OF WINGS & COLLARS 32.7 C.Y.

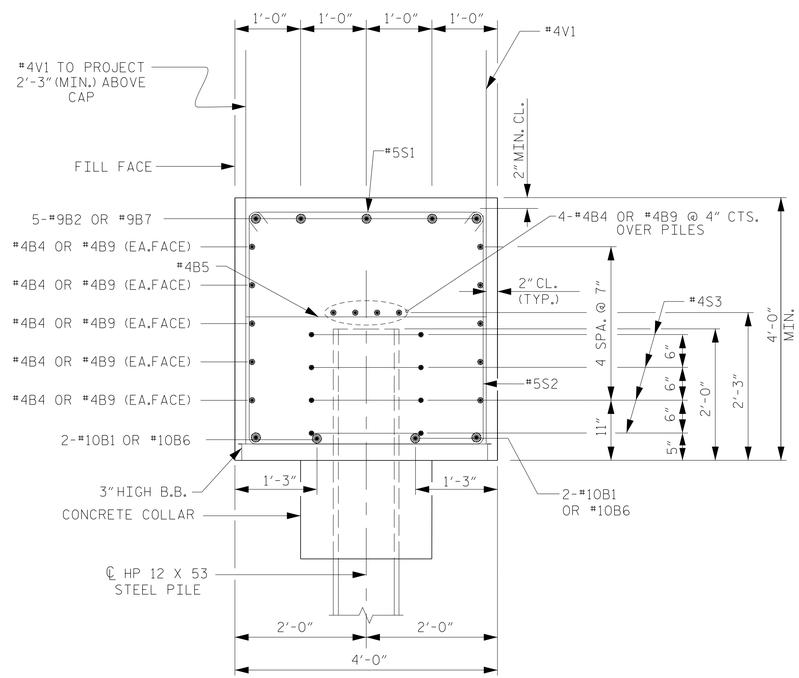

SECTION X-X

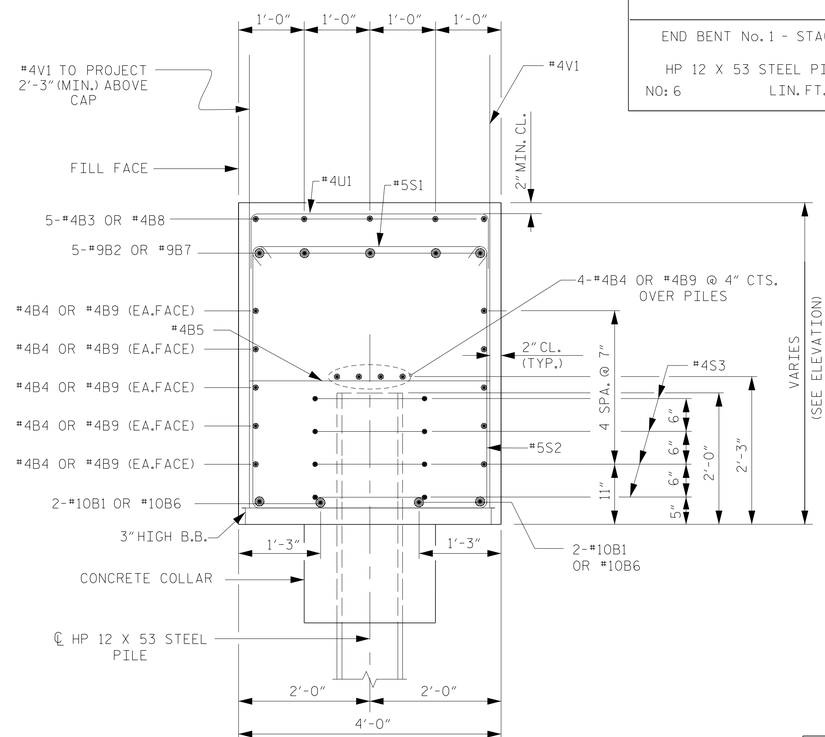

SECTION Y-Y

PROJECT NO. I-0914BA

VANCE COUNTY

STATION: 22+06.96 -Y1- POT

SHEET 4 OF 4

NORTH CAROLINA PROFESSIONAL SEAL 11725 ENGINEER DAVID R. RUGGLES

DocuSigned by: David Ruggles C462768DF412422 11/17/2014

DWG. 38 OF 48

STEWART

Firm License No. C-1051
421 Fayetteville St,
Suite 400
Raleigh, NC 27601
T 919.380.8750
www.stewartinc.com

STATE OF NORTH CAROLINA
DEPARTMENT OF TRANSPORTATION
RALEIGH

END BENT NO. 1 DETAILS

REVISIONS							
NO.	BY:	DATE:	NO.	BY:	DATE:		
1			3				
2			4				

SHEET NO. S-38

TOTAL SHEETS 177

DRAWN BY:	H.ASSFOURA	DATE :	08/14
CHECKED BY:	P.JACOB	DATE :	09/14
DESIGN ENGINEER OF RECORD:	D.RUGGLES	DATE :	09/14