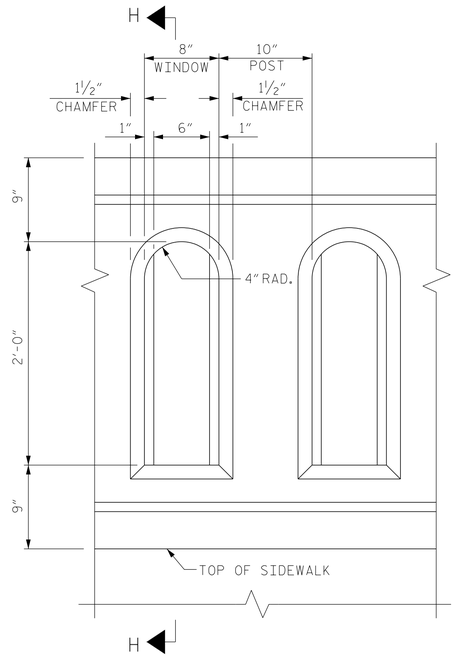

WINDOW DETAIL

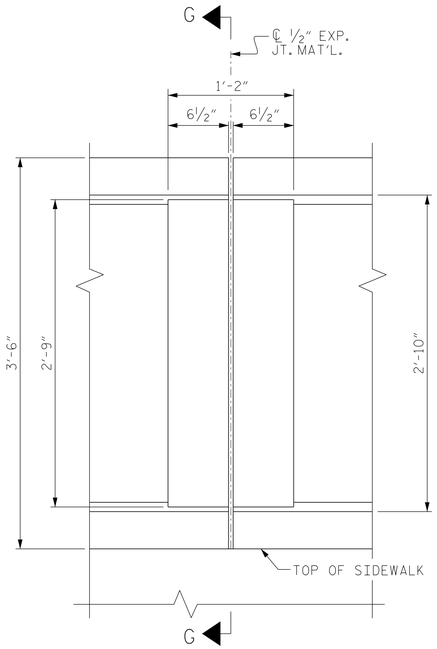

SPAN PILASTER

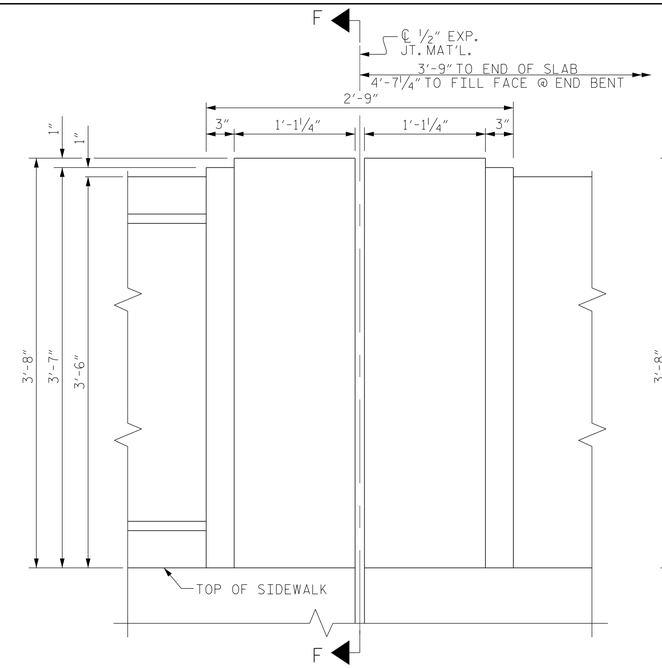

END BENT PILASTER

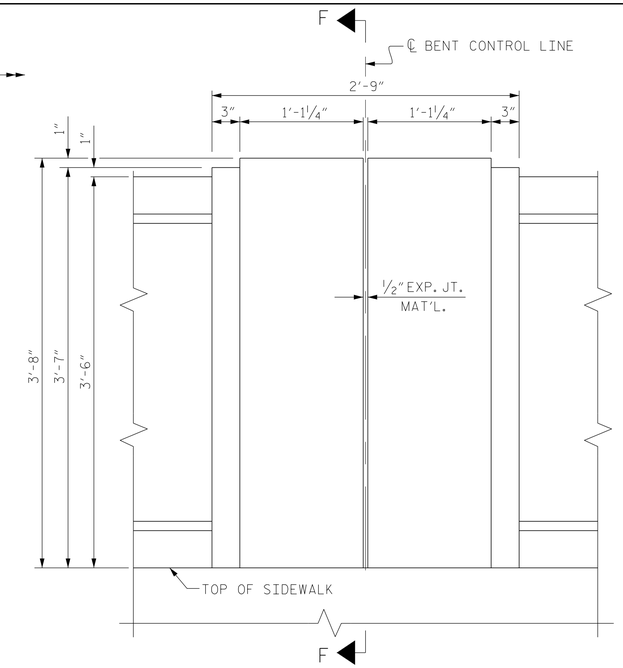

BENT PILASTER

EXTERIOR PILASTER ELEVATIONS

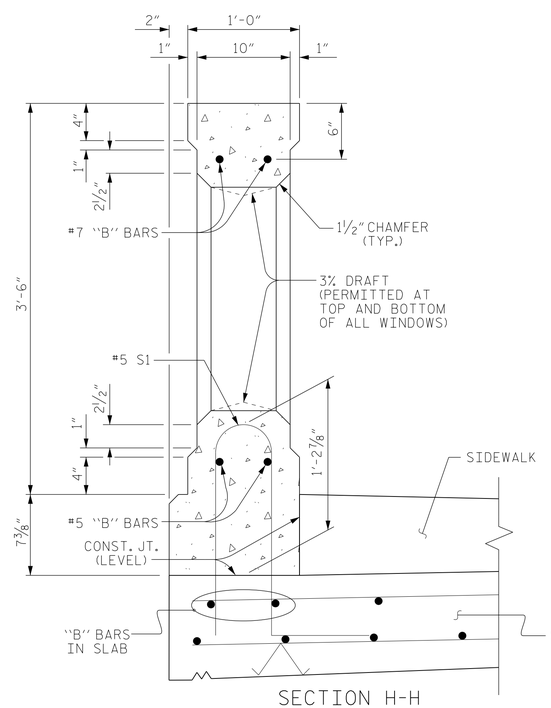

SECTION H-H
(SHOWING WINDOW OF RAIL)

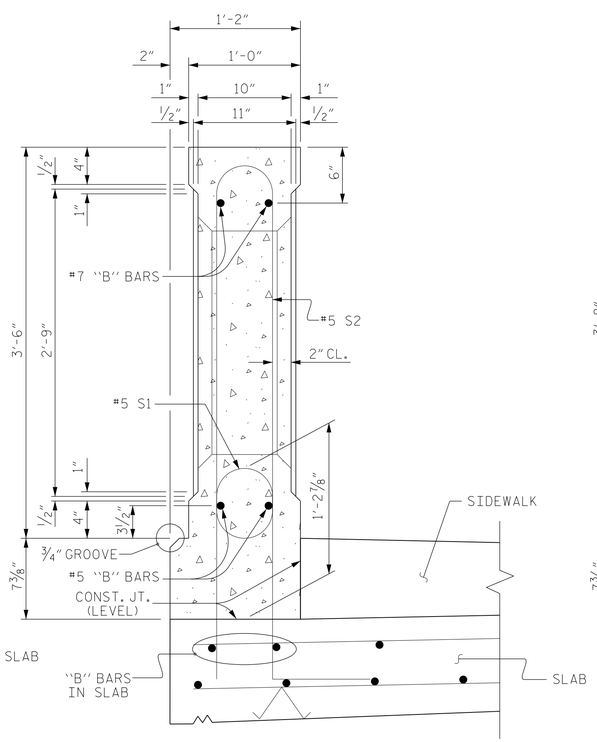

SECTION G-G
(SHOWING SPAN PILASTER)

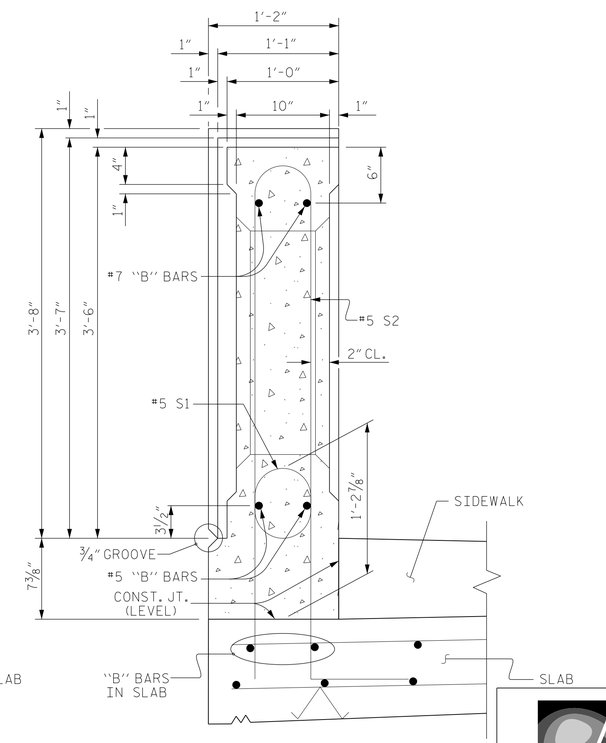

SECTION F-F
(SHOWING BENT PILASTER)

DRAWN BY: J. LOFTUS	DATE : 09/14		
CHECKED BY: P. JACOB	DATE : 09/14		
DESIGN ENGINEER OF RECORD: D. RUGGLES	DATE : 09/14		

PROJECT NO. I-0914BA

VANCE COUNTY

STATION: 22+06.96 -Y1- POT

SHEET 2 OF 3

NORTH CAROLINA PROFESSIONAL SEAL 11725 ENGINEER DAVID R. RUGGLES

DocuSigned by: David Ruggles 11/17/2014
C462768DF412422...

DWG. 29 OF 48

STEWART

Firm License No. C-1051
421 Fayetteville St,
Suite 400
Raleigh, NC 27601
T 919.380.8750
www.stewartinc.com

STATE OF NORTH CAROLINA
DEPARTMENT OF TRANSPORTATION
RALEIGH

STANDARD

CLASSIC CONCRETE
BRIDGE RAIL WITH
SIDEWALK

REVISIONS						SHEET NO.
NO.	BY:	DATE:	NO.	BY:	DATE:	S-29
1			3			TOTAL SHEETS
2			4			177

STD. No. CCR2