*FOR END BENT NOTES, SEE "INTEGRAL END BENT No. 1" (SHEET 1 OF 4)

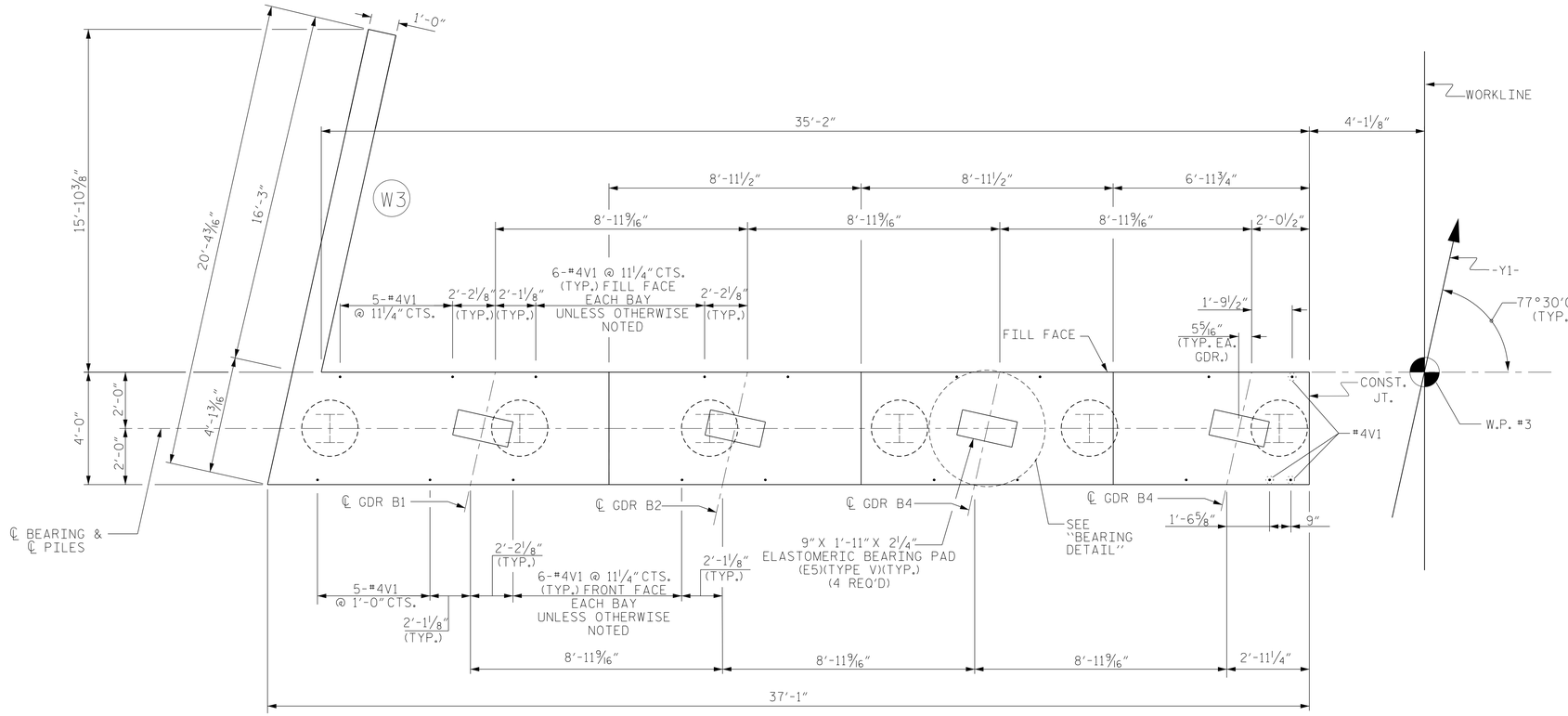

PLAN

(STAGE I)

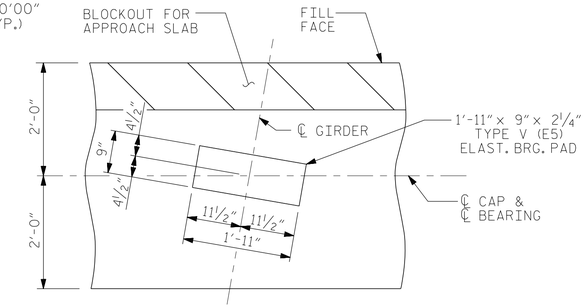

BEARING DETAIL

(DIMENSIONS ARE TYPICAL EACH GIRDER)
(HP 12X53 PILES NOT SHOWN FOR CLARITY)

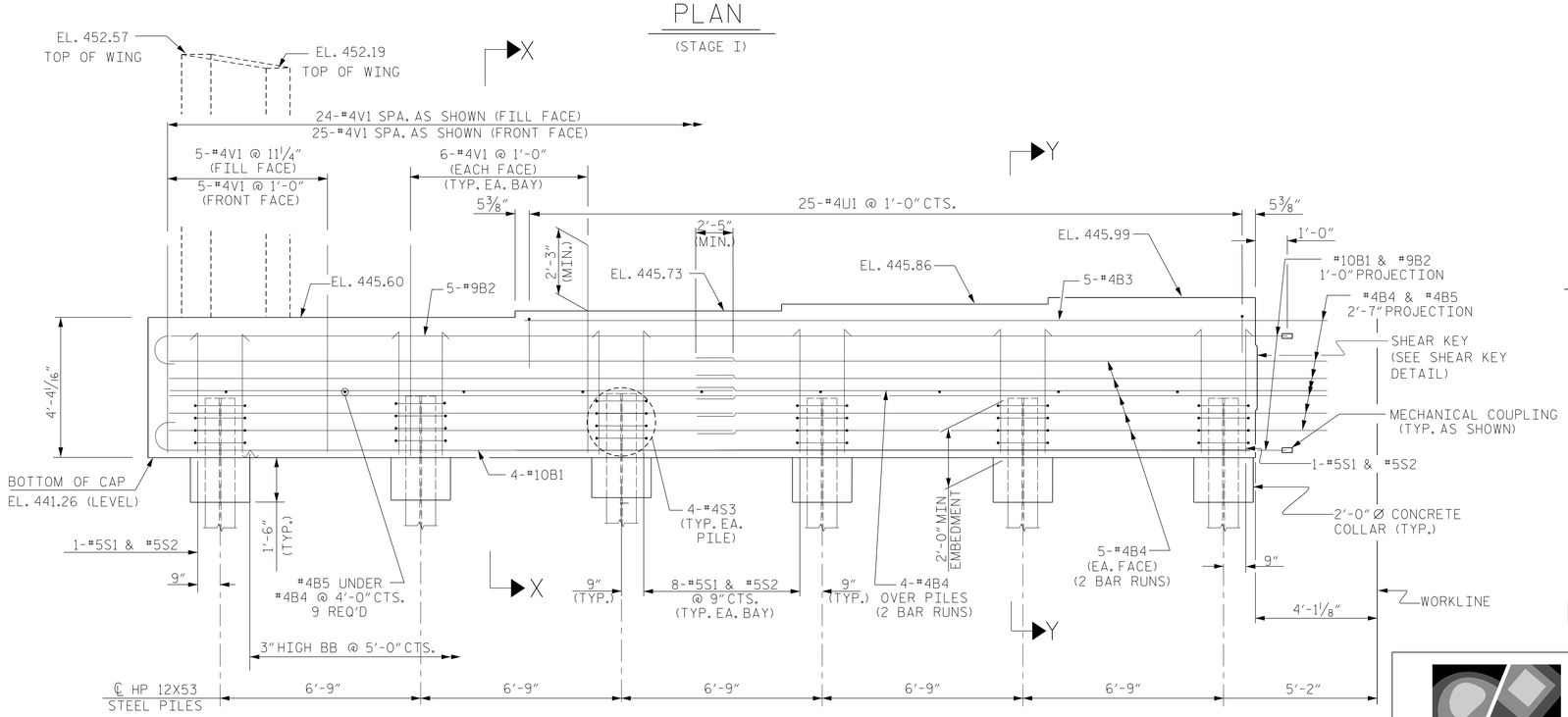

ELEVATION

(STAGE I)

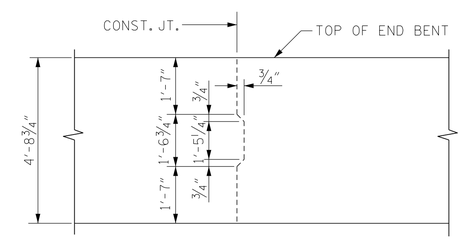

SHEAR KEY DETAIL

NOTE: REINFORCING STEEL IN END BENT NOT SHOWN.
LONGITUDINAL STEEL SHALL BE CONTINUOUS THROUGH JOINT.

PROJECT NO. I-0914BA

VANCE COUNTY

STATION: 22+06.96 -Y1- POT

SHEET 1 OF 4

NORTH CAROLINA PROFESSIONAL SEAL 11725 ENGINEER DAVID R. RUGGLES

DocuSigned by: David Ruggles C462768DF412422... 11/17/2014

DWG. 42 OF 48

Firm License No. C-1051
421 Fayetteville St,
Suite 400
Raleigh, NC 27601
T 919.380.8750
www.stewartinc.com

STEWART

STATE OF NORTH CAROLINA
DEPARTMENT OF TRANSPORTATION
RALEIGH

INTEGRAL END BENT NO. 2 STAGE I

REVISIONS							SHEET NO.
NO.	BY:	DATE:	NO.	BY:	DATE:		S-42
1			3				TOTAL SHEETS
2			4				177

DRAWN BY:	H.ASSFOURA	DATE :	08/14
CHECKED BY:	P.JACOB	DATE :	09/14
DESIGN ENGINEER OF RECORD:	D.RUGGLES	DATE :	09/14