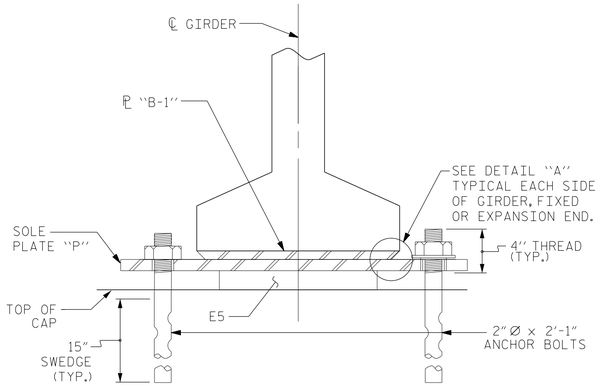

SECTION E-E
AT INTERIOR BENT

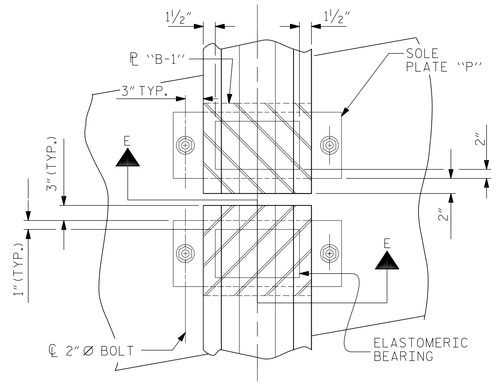

TYPICAL PLAN @ BENT
(SHOWING CONTINUOUS BENT)

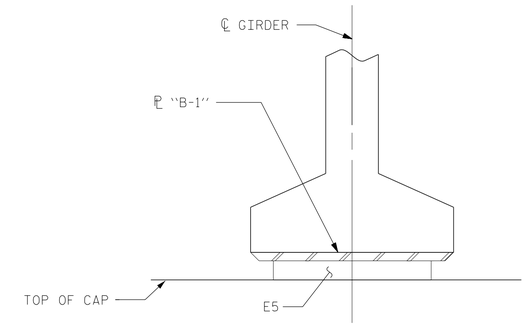

SECTION F-F
AT INTEGRAL END BENT

NOTES

AT ALL FIXED POINTS OF SUPPORT, NUTS FOR ANCHOR BOLTS ARE TO BE TIGHTENED FINGER TIGHT AND THEN BACKED OFF ½ TURN. THE THREAD OF THE NUT AND BOLT SHALL THEN BE BURRED WITH A SHARP POINTED TOOL.

THE 2" Ø PIPE SLEEVE SHALL BE CUT FROM SCHEDULE 40 PVC PLASTIC PIPE. THE PVC PLASTIC PIPE SHALL MEET THE REQUIREMENTS OF ASTM D1785.

STEEL SOLE PLATES, ANCHOR BOLTS, NUTS, AND WASHERS SHALL BE GALVANIZED IN ACCORDANCE WITH THE STANDARD SPECIFICATIONS.

PRIOR TO WELDING, GRIND THE GALVANIZED SURFACE OF THE PORTION OF THE EMBEDDED PLATE AND SOLE PLATE THAT ARE TO BE WELDED. AFTER WELDING, DAMAGED GALVANIZED SURFACES SHALL BE REPAIRED IN ACCORDANCE WITH THE STANDARD SPECIFICATIONS.

WHEN WELDING THE SOLE PLATE TO THE EMBEDDED PLATE IN THE GIRDER, USE TEMPERATURE INDICATING WAX PENS, OR OTHER SUITABLE MEANS, TO ENSURE THAT THE TEMPERATURE OF THE SOLE PLATE DOES NOT EXCEED 300°F. TEMPERATURES ABOVE THIS MAY DAMAGE THE ELASTOMER.

SOLE PLATE "P", BOLTS, NUTS, WASHERS, AND PIPE SLEEVE SHALL BE INCLUDED IN THE PAY ITEM FOR PRESTRESSED CONCRETE GIRDERS.

ANCHOR BOLTS SHALL MEET THE REQUIREMENTS OF ASTM A449. NUTS SHALL MEET THE REQUIREMENTS OF AASHTO M291-DH OR AASHTO M292-2H. WASHERS SHALL MEET THE REQUIREMENTS OF AASHTO M293. NO SHOP DRAWINGS ARE REQUIRED FOR ANCHOR BOLTS, NUTS AND WASHERS. SHOP INSPECTION IS REQUIRED.

ALL SURFACES OF BEARING PLATES SHALL BE SMOOTH AND STRAIGHT.

THE ELASTOMER IN THE STEEL REINFORCED BEARINGS SHALL HAVE A SHEAR MODULUS OF 0.160 KSI, IN ACCORDANCE WITH AASHTO M251.

FOR STEEL REINFORCED ELASTOMERIC BEARINGS, SEE SPECIAL PROVISIONS.

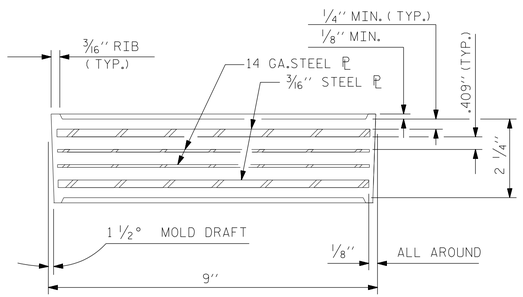

TYPICAL SECTION OF ELASTOMERIC BEARINGS

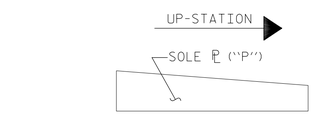

SOLE ℗ PLACEMENT DETAIL

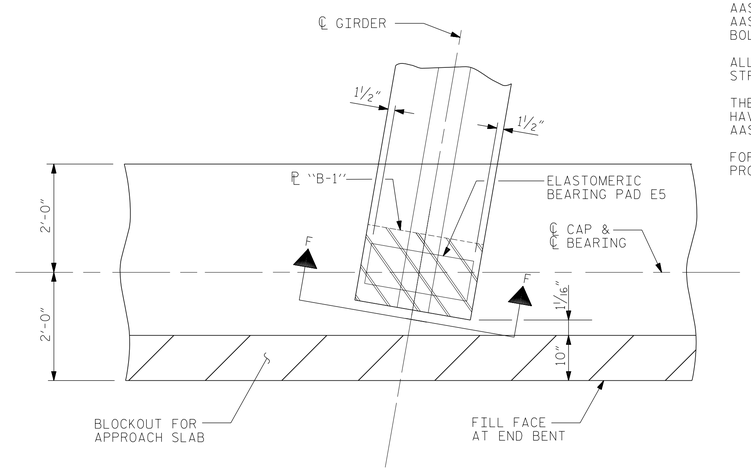

TYPICAL PLAN AT END BENT

MAXIMUM ALLOWABLE SERVICE LOADS	
D.L.+L.L. (NO IMPACT)	
TYPE V	365 k

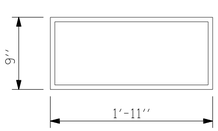

E5 (32 REQ'D)
PLAN VIEW OF ELASTOMERIC BEARING
TYPE V

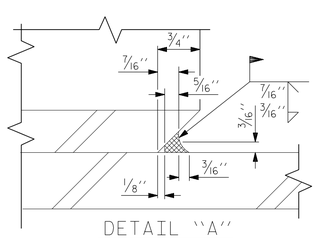

DETAIL "A"

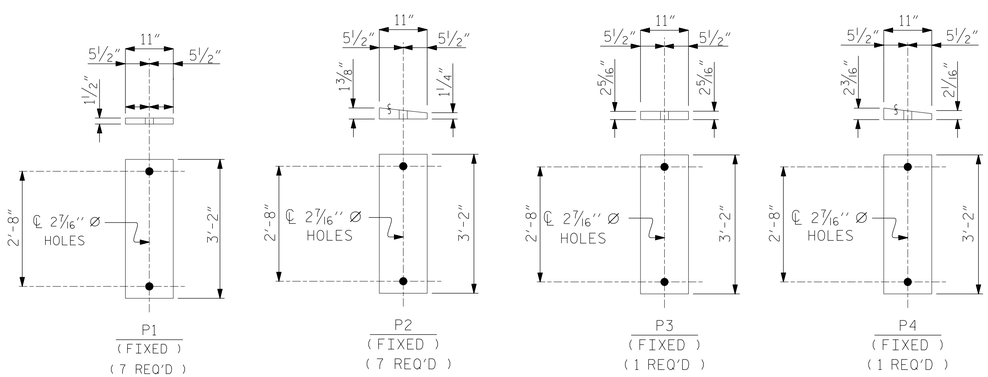

SOLE PLATE DETAILS ("P")

PROJECT NO. I-0914BA
VANCE COUNTY
STATION: 22+06.96 -Y1- POT

NORTH CAROLINA PROFESSIONAL SEAL 11725 ENGINEER DAVID R. RUGGLES

DocuSigned by: David Ruggles C462768DF412422... 11/17/2014

DWG. 26 OF 48

STEWART
Firm License No. C-1051
421 Fayetteville St,
Suite 400
Raleigh, NC 27601
T 919.380.8750
www.stewartinc.com

STATE OF NORTH CAROLINA
DEPARTMENT OF TRANSPORTATION
RALEIGH

STANDARD

ELASTOMERIC BEARING DETAILS

PRESTRESSED CONCRETE GIRDER SUPERSTRUCTURE

REVISIONS						SHEET NO.
NO.	BY:	DATE:	NO.	BY:	DATE:	S-26
1			3			TOTAL SHEETS
2			4			177

DRAWN BY:	H.ASSFOURA	DATE :	08/14
CHECKED BY:	P.JACOB	DATE :	09/14
DESIGN ENGINEER OF RECORD:	D. RUGGLES	DATE :	09/14

STD. NO. EB4 (SHT 1)