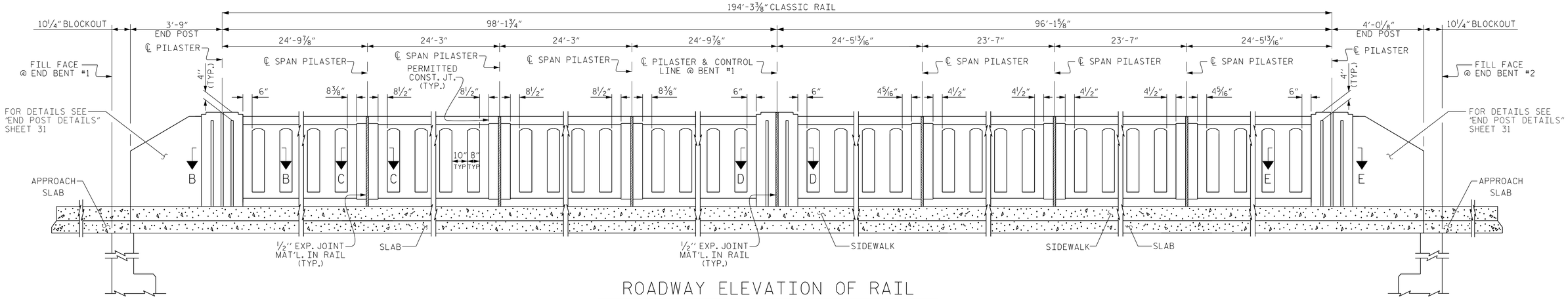

ROADWAY ELEVATION OF RAIL

CHAMFERS NOT SHOWN FOR CLARITY

NOTES

CLASSIC CONCRETE BRIDGE RAIL IN A CONTINUOUS UNIT SHALL NOT BE CAST UNTIL ALL SLAB CONCRETE IN THE UNIT HAS BEEN CAST AND HAS REACHED A MINIMUM COMPRESSIVE STRENGTH OF 3,000 PSI.

ALL REINFORCING STEEL IN THE CLASSIC CONCRETE BRIDGE RAIL SHALL BE EPOXY COATED.

FOR CLASSIC CONCRETE BRIDGE RAIL, SEE SPECIAL PROVISIONS.

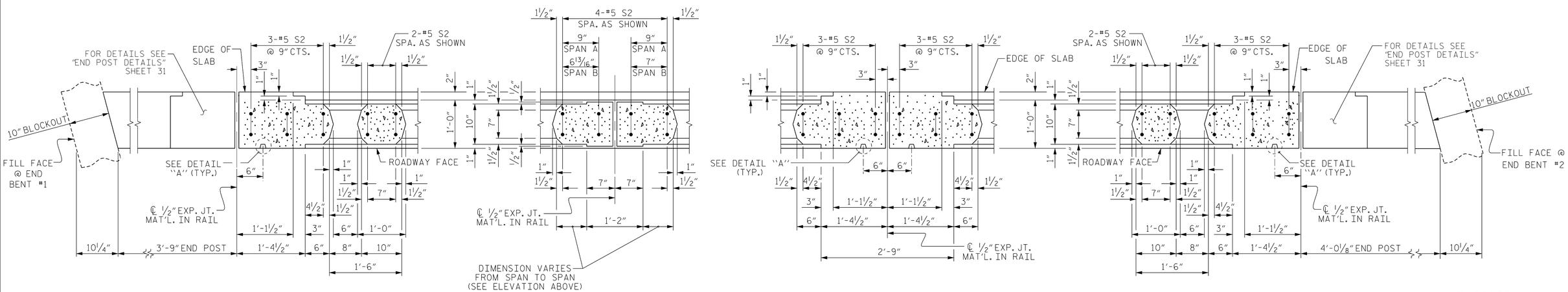

SECTION B-B
SHOWING END BENT #1 PILASTER

SECTION C-C
SHOWING SPAN PILASTER

SECTION D-D
SHOWING BENT PILASTER

SECTION E-E
SHOWING END BENT #2 PILASTER

PARTIAL PLAN

STAGE I SHOWN, STAGE II SIMILAR

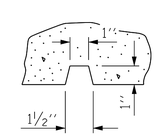

DETAIL "A"

PROJECT NO. I-0914BA

VANCE COUNTY

STATION: 22+06.96 -Y1- POT

SHEET 1 OF 3

NORTH CAROLINA PROFESSIONAL SEAL 11725 ENGINEER DAVID R. RUGGLES

DocuSigned by: David Ruggles C462768DF412422... 11/17/2014

DWG. 28 OF 48

STATE OF NORTH CAROLINA
DEPARTMENT OF TRANSPORTATION
RALEIGH

STANDARD

CLASSIC CONCRETE BRIDGE RAIL WITH SIDEWALK

Firm License No. C-1051
421 Fayetteville St,
Suite 400
Raleigh, NC 27601
T 919.380.8750
www.stewartinc.com

STEWART

REVISIONS						SHEET NO.
NO.	BY:	DATE:	NO.	BY:	DATE:	S-28
1			3			TOTAL SHEETS
2			4			177

STD. No. CCR1

DRAWN BY:	J. LOFTUS	DATE :	08/14
CHECKED BY:	P. JACOB	DATE :	08/14
DESIGN ENGINEER OF RECORD:	D. RUGGLES	DATE :	09/14