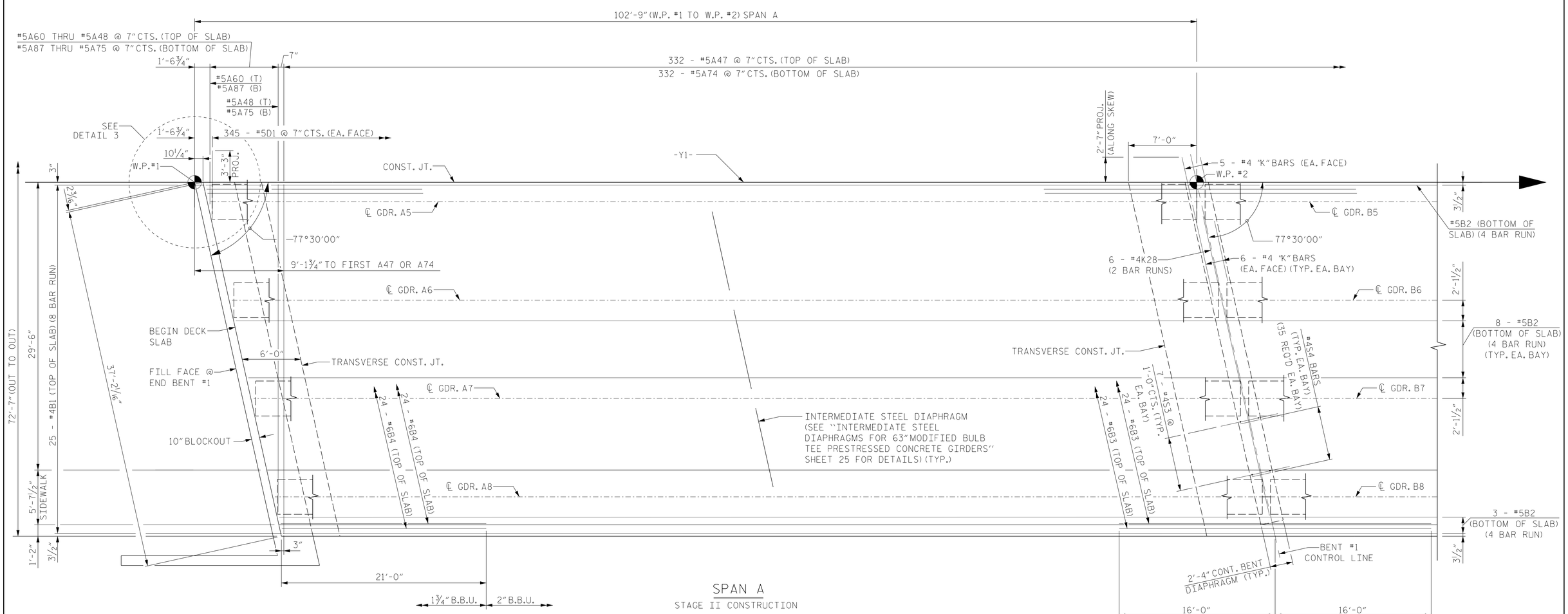

SPAN A
STAGE II CONSTRUCTION

PLAN OF SPANS

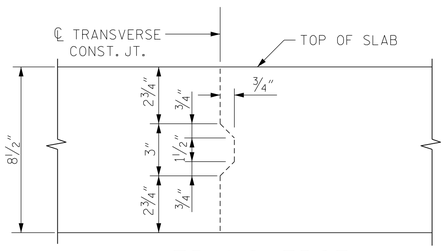

TRANSVERSE CONSTRUCTION JOINT DETAIL

NOTE: REINFORCING STEEL IN SLAB NOT SHOWN.
LONGITUDINAL STEEL SHALL BE CONTINUOUS THROUGH JOINT.

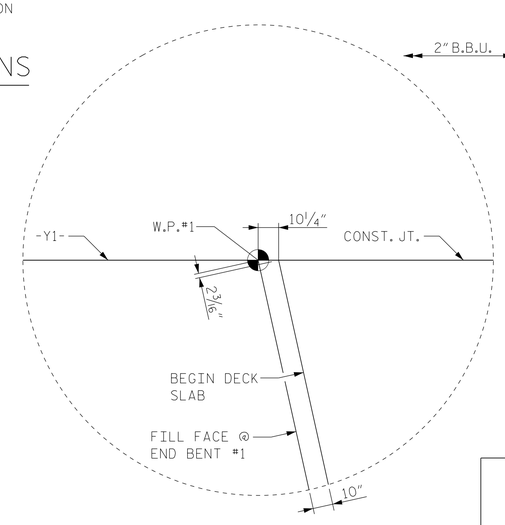

DETAIL 3

PROJECT NO. I-0914BA
VANCE COUNTY
STATION: 22+06.96 -Y1- POT

SHEET 5 OF 9

NORTH CAROLINA PROFESSIONAL SEAL 11725 ENGINEER DAVID R. RUGGLES

DocuSigned by: David Ruggles C462768DF412422... 11/17/2014

DWG. 15 OF 48

STEWART
Firm License No. C-1051
421 Fayetteville St,
Suite 400
Raleigh, NC 27601
T 919.380.8750
www.stewartinc.com

STATE OF NORTH CAROLINA
DEPARTMENT OF TRANSPORTATION
RALEIGH

SUPERSTRUCTURE
PLAN OF SPANS
SPAN A - STAGE II

REVISIONS						SHEET NO.
NO.	BY:	DATE:	NO.	BY:	DATE:	S-15
1			3			TOTAL SHEETS
2			4			177

DRAWN BY: J. LOFTUS DATE: 08/14
CHECKED BY: D. RUGGLES DATE: 09/14
DESIGN ENGINEER OF RECORD: D. RUGGLES DATE: 09/14