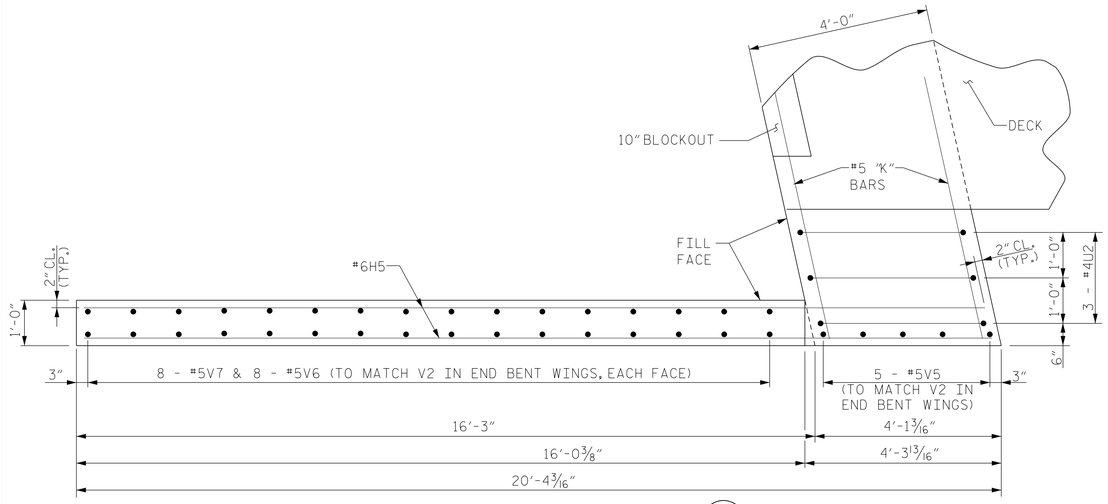

PLAN OF WING (W2)

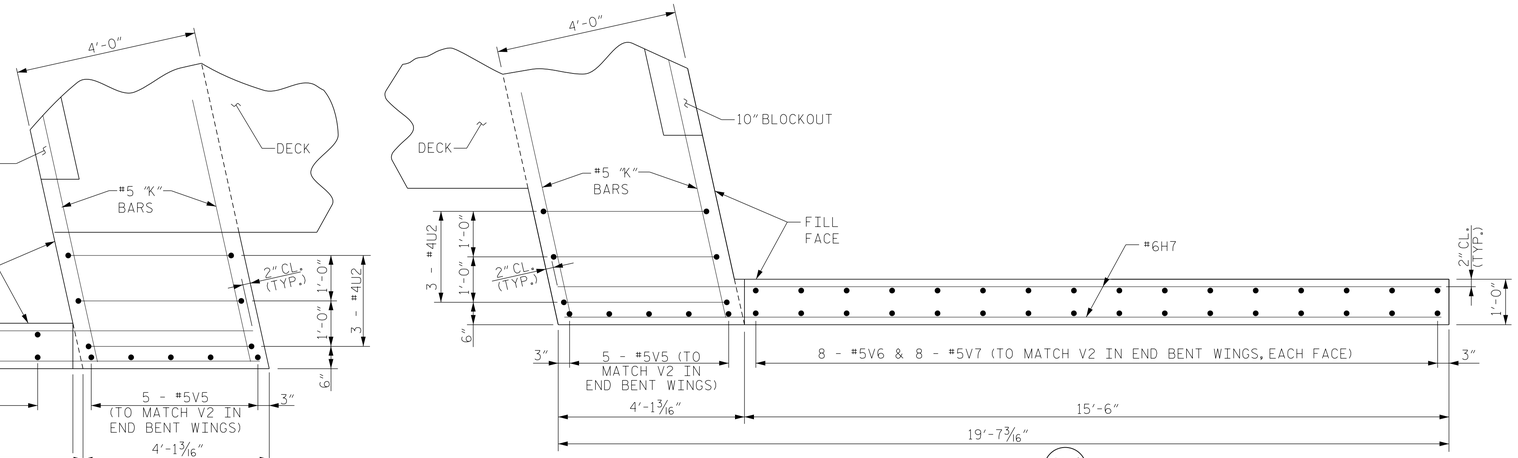

PLAN OF WING (W4)

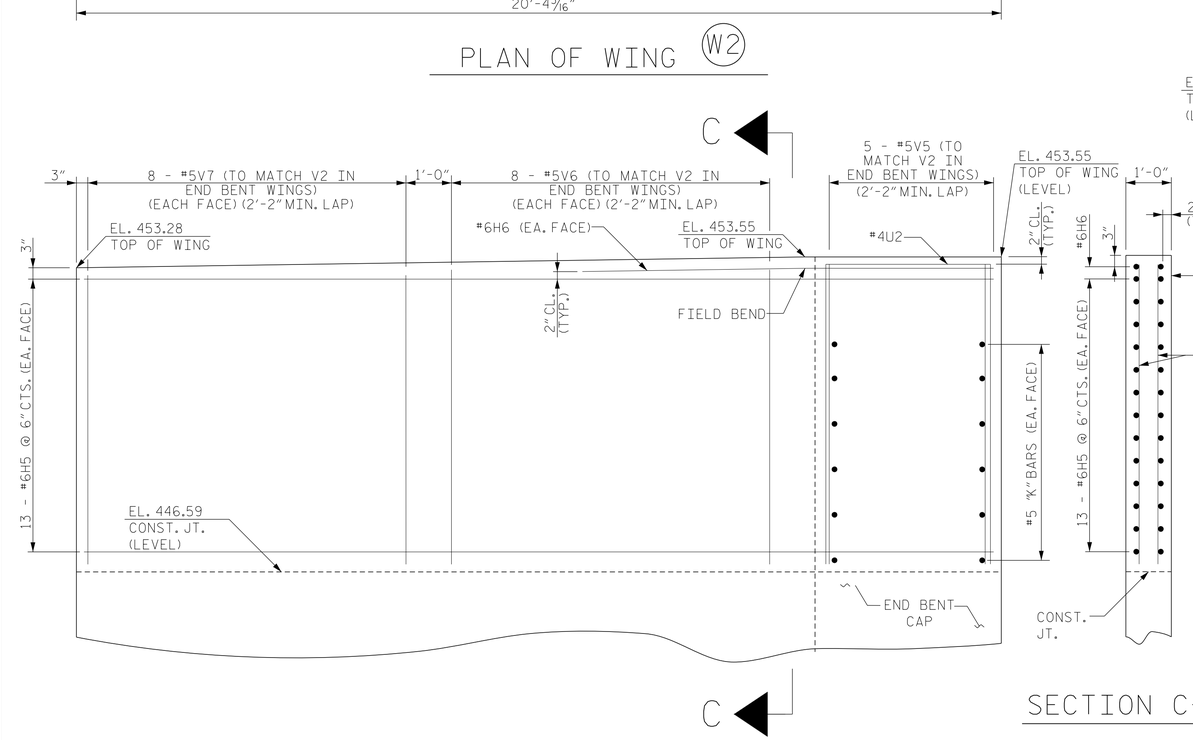

SECTION C-C

ELEVATION OF WING (W2)

FOR REINFORCING STEEL IN LOWER PORTION OF WING, SEE END BENT SHEETS

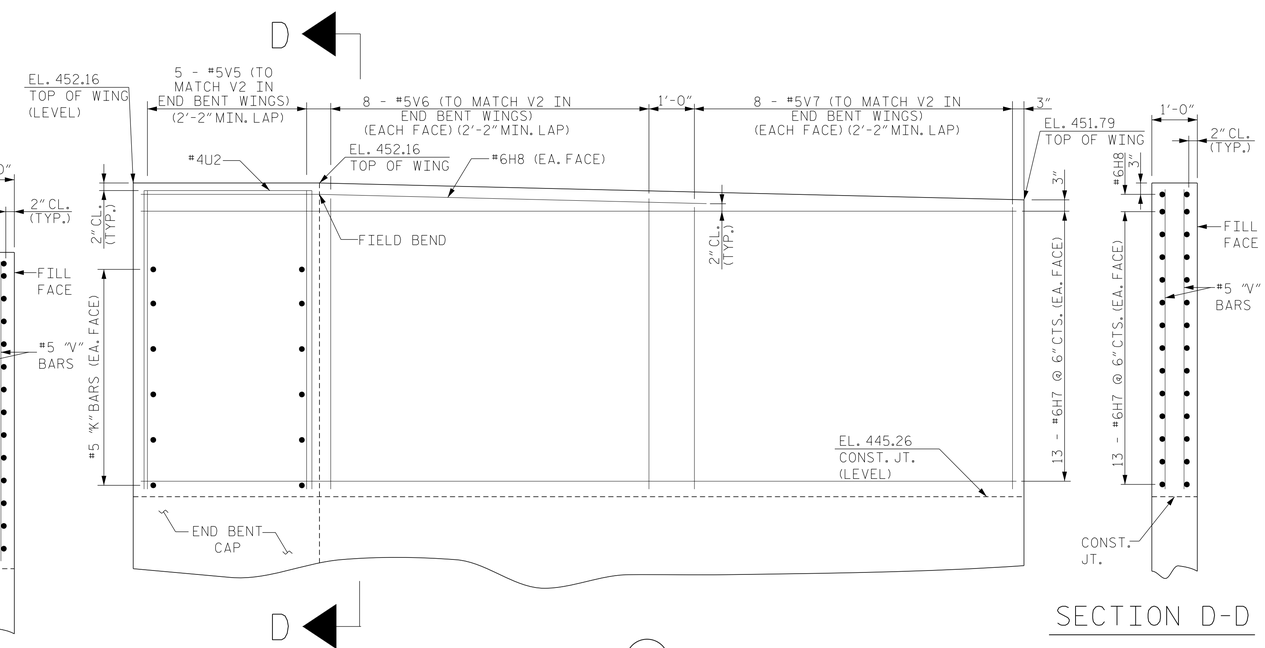

SECTION D-D

ELEVATION OF WING (W4)

FOR REINFORCING STEEL IN LOWER PORTION OF WING, SEE END BENT SHEETS

PROJECT NO. I-0914BA

VANCE COUNTY

STATION: 22+06.96 -Y1- POT

SHEET 8 OF 9

NORTH CAROLINA PROFESSIONAL SEAL 11725 ENGINEER DAVID R. RUGGLES

DocuSigned by: David Ruggles C462768DF412422 11/17/2014

DWG. 18 OF 48

STEWART

Firm License No. C-1051
421 Fayetteville St,
Suite 400
Raleigh, NC 27601
T 919.380.8750
www.stewartinc.com

STATE OF NORTH CAROLINA
DEPARTMENT OF TRANSPORTATION
RALEIGH

SUPERSTRUCTURE
PLAN OF SPANS DETAILS
STAGE II

REVISIONS						SHEET NO.
NO.	BY:	DATE:	NO.	BY:	DATE:	S-18
1			3			TOTAL SHEETS
2			4			177

DRAWN BY: J. LOFTUS	DATE : 08/14	
CHECKED BY: D. RUGGLES	DATE : 09/14	
DESIGN ENGINEER OF RECORD: D. RUGGLES	DATE : 09/14	