PROJECT NO.	SHEET NO.
I-0914BA	Sig. P2

STATE OF
NORTH CAROLINA
DEPT. OF TRANSPORTATION
DIVISION OF HIGHWAYS
RALEIGH, N.C.

06-14

ENGLISH DETAIL DRAWING FOR

PEDESTRIAN PUSHBUTTON LOCATIONS

PLACEMENT DETAIL

SHEET 2 OF 3

1705D01

TYPICAL PUSHBUTTON LOCATIONS (CASE I)

SEPARATE CURB RAMPS W/ TYPE I PEDESTALS

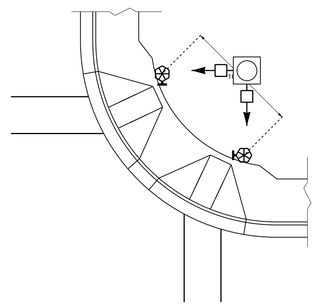

BACK OF SIDEWALK IS WITHIN 10'
OF CURB OR PAVEMENT/SHOULDER

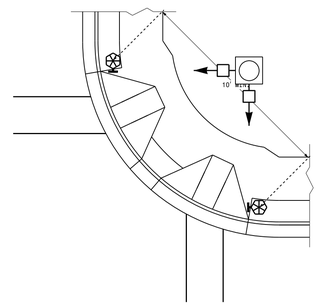

GRASS STRIP PLACEMENT IF BACK
OF SIDEWALK EXCEEDS 10' FROM
CURB OR PAVEMENT/SHOULDER

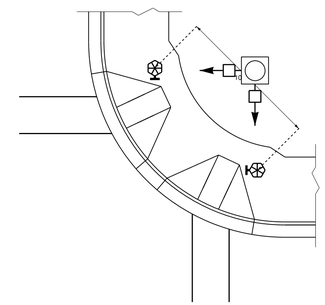

PUSHBUTTON PLACEMENT
IN WIDE SIDEWALK

PROPOSED

LEGEND

- Signal Pole
- Type I Pushbutton Post
- Type II Signal Pedestal
- Pushbutton & Sign
- Pedestrian Signal Head
- Curb Ramp
- Pushbutton Location Area

TYPICAL PUSHBUTTON LOCATIONS (CASE II)

SEPARATE CURB RAMPS W/ TYPE II PEDESTALS

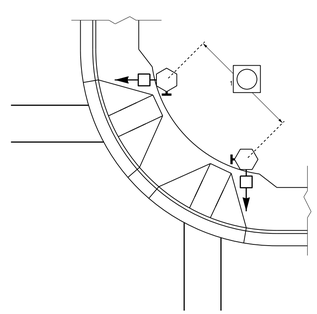

BACK OF SIDEWALK IS WITHIN 10'
OF CURB OR PAVEMENT/SHOULDER

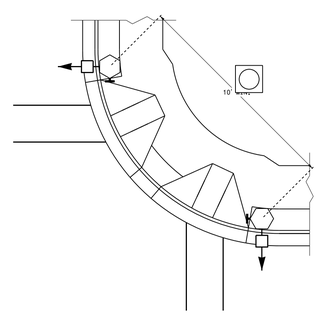

GRASS STRIP PLACEMENT IF BACK
OF SIDEWALK EXCEEDS 10' FROM
CURB OR PAVEMENT/SHOULDER

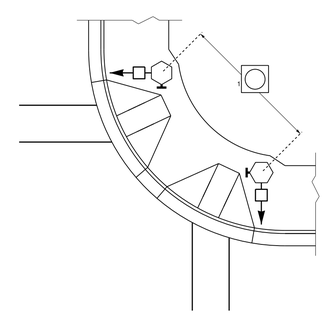

PUSHBUTTON PLACEMENT
IN WIDE SIDEWALK

OPTIONAL PUSHBUTTON EXTENSION

FACE OF PUSHBUTTON PARALLEL TO
APPLICABLE CROSSWALK

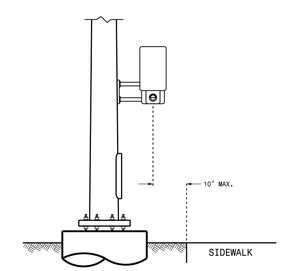

STATE OF
NORTH CAROLINA
DEPT. OF TRANSPORTATION
DIVISION OF HIGHWAYS
RALEIGH, N.C.

06-14

ENGLISH DETAIL DRAWING FOR

PEDESTRIAN PUSHBUTTON LOCATIONS

PLACEMENT DETAIL

SHEET 2 OF 3

1705D01

See Plate for Title

Prepared in the Offices of:

Transportation Mobility and Safety Division
Signal Design Section

750 N. Greenfield Parkway
Garner, NC 27529

SEAL

NORTH CAROLINA PROFESSIONAL SEAL 026486 ENGINEER ROBERT J. ZIEMBA

DocuSigned by: 1B9D4B6274A4B4...

SIGNATURE

6/17/2014

DATE

26-AUG-2014 16:38
S:\TIS\SGN\TIS\Signals\Signal Design Section\Central Region\Rob's Files\Ped Stds\Pushbutton Drawings\Pushbutton Plate Drawings_20140617.dgn
rziemba