PROJECT REFERENCE NO.	SHEET NO.
I-0914BA	Sig. 12.1

EDI MODEL 2018ECL-NC CONFLICT MONITOR PROGRAMMING DETAIL

(remove jumpers and set switches as shown)

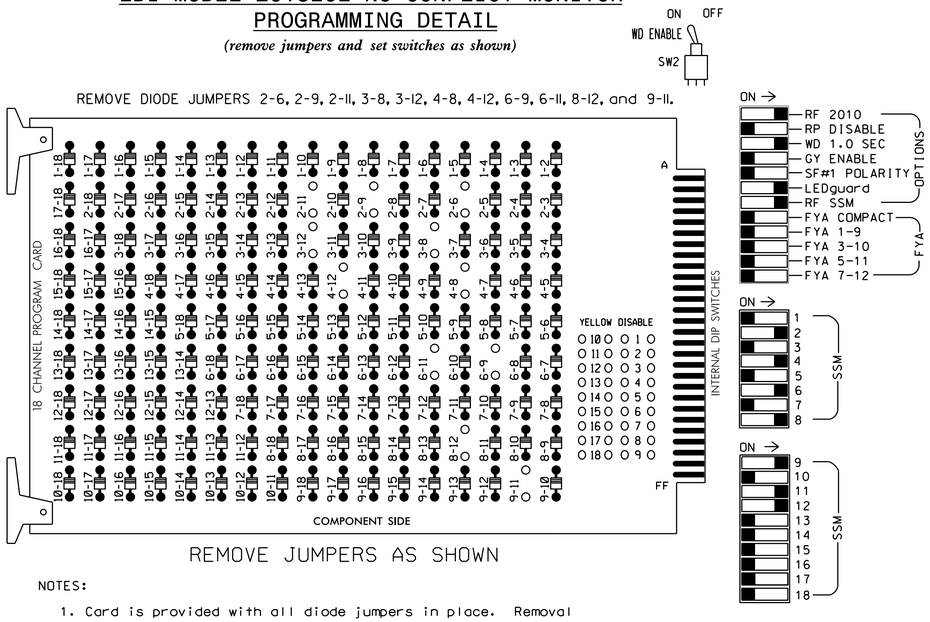

REMOVE JUMPERS AS SHOWN

NOTES:

1. Card is provided with all diode jumpers in place. Removal of any jumper allows its channels to run concurrently.
2. Ensure jumpers SEL2-SEL5 and SEL9 are present on the monitor board.
3. Ensure that Red Enable is active at all times during normal operation.
4. Connect serial cable from conflict monitor to comm. port 1 of 2070 controller. Ensure conflict monitor communicates with 2070.

NOTES

1. To prevent "flash-conflict" problems, insert red flash program blocks for all unused vehicle load switches in the output file. The installer shall verify that signal heads flash in accordance with the Signal Plans.
2. Program phases 4 and 8 for Dual Entry.
3. Enable Simultaneous Gap-Out for all phases.
4. Program phases 2 and 6 for Start Up In Green.
5. Program phases 2 and 6 for Yellow Flash, and overlap 1 as Wag overlaps.

EQUIPMENT INFORMATION

CONTROLLER.....2070L
CABINET.....332 W/ AUX
SOFTWARE.....ECONOLITE OASIS
CABINET MOUNT.....BASE
OUTPUT FILE POSITIONS...18 WITH AUX OUTPUT FILE
LOAD SWITCHES USED.....S2,S3*,S4,S5,S8,S11,
AUX S1,AUX S4,AUX S5
PHASES USED.....2,3**,4,6,8
OVERLAP A.....6
OVERLAP B.....NOT USED
OVERLAP C.....2
OVERLAP D.....8

* USED FOR FIREHOUSE PILOT LAMP
** USED DURING EV PREEMPT ONLY

SIGNAL HEAD HOOK-UP CHART

LOAD SWITCH NO.	S1	S2	S3	S4	S5	S6	S7	S8	S9	S10	S11	S12	AUX S1	AUX S2	AUX S3	AUX S4	AUX S5	AUX S6
CMU CHANNEL NO.	1	2	13	3	4	14	5	6	15	7	8	16	9	10	17	11	12	18
PHASE	1	2	2 PED	3	4	4 PED	5	6	6 PED	7	8	8 PED	OLA	OLB	SPARE	OLC	OLD	SPARE
SIGNAL HEAD NO.	NU	21,22	FIRE PILOT LAMP	81	41,42	NU	NU	61,62	NU	NU	81,82	NU	63★	NU	NU	23★	43★	NU
RED		128			101			134			107							
YELLOW		129	* 114	*	102			135			108							
GREEN		130			103			136			109							
RED ARROW													A121			A114	A101	
YELLOW ARROW													A122			A115	A102	
FLASHING YELLOW ARROW													A123			A116	A103	
GREEN ARROW			* 115	118														

NU = Not Used

* Denotes install load resistor. See load resistor installation detail this sheet.

★ See pictorial of head wiring in detail below.

FYA SIGNAL WIRING DETAIL

(wire signal heads as shown)

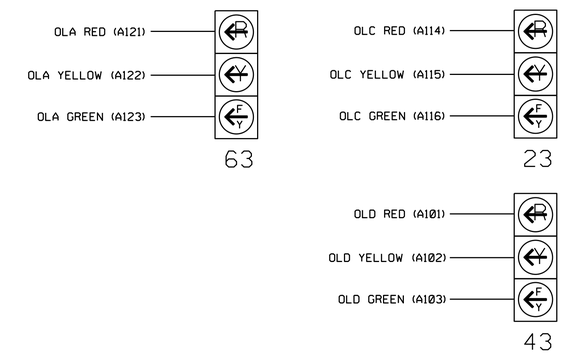

INPUT FILE POSITION LAYOUT

(front view)

		1	2	3	4	5	6	7	8	9	10	11	12	13	14
FILE "I"	U	SLOT	Ø 2 2A,2B	Ø 2 2E	SLOT	SLOT	Ø 4 4A	SLOT	SLOT	SLOT	SLOT	SLOT	SLOT	SLOT	FS DC ISOLATOR
	L	EMPTY	Ø 2 2C,2D	NOT USED	EMPTY	EMPTY	Ø 4 4B	EMPTY	EMPTY	EMPTY	EMPTY	EMPTY	EMPTY	EMPTY	ST DC ISOLATOR
FILE "J"	U	SLOT	Ø 6 6A,6B	Ø 6 6E	SLOT	SLOT	Ø 8 8A	SLOT	SLOT	SLOT	SLOT	SLOT	SLOT	SLOT	NOT USED
	L	EMPTY	Ø 6 6C,6D	NOT USED	EMPTY	EMPTY	NOT USED	EMPTY	EMPTY	EMPTY	EMPTY	EMPTY	EMPTY	EMPTY	PRE2 AC ISOLATOR

EX.: 1A, 2A, ETC. = LOOP NO.'S

FS = FLASH SENSE
ST = STOP TIME
PRE2 = FIRE EV PREEMPT

INPUT FILE CONNECTION & PROGRAMMING CHART

LOOP NO.	LOOP TERMINAL	INPUT FILE POS.	PIN NO.	INPUT ASSIGNMENT NO.	DETECTOR NO.	NEMA PHASE	CALL	EXTEND	FULL TIME DELAY	STRETCH TIME	DELAY TIME
2A,2B	TB2-5,6	I2U	39	1	2	2	Y	Y		2.0	
2C,2D	TB2-7,8	I2L	43	5	12	2	Y	Y			
2E	TB2-9,10	I3U	63	25	32	2	Y	Y			
4A	TB4-9,10	I6U	41	3	4	4	Y	Y			
4B	TB4-11,12	I6L	45	7	14	4	Y	Y			
6A,6B	TB3-5,6	J2U	40	2	6	6	Y	Y		2.0	
6C,6D	TB3-7,8	J2L	44	6	16	6	Y	Y			
6E	TB3-9,10	J3U	64	26	36	6	Y	Y			
8A	TB5-9,10	J6U	42	4	8	8	Y	Y			5

INPUT FILE POSITION LEGEND: J2L
FILE J
SLOT 2
LOWER

PREEMPT ONLY PHASE OMIT NOTE

(program controller as shown below)

From Main Menu press '2' (Phase Control). Then '1' (Phase Control Functions). Program Phase 3 for 'Omit Phase' and Phases 2, 4, 6 and 8 for 'Startup Calls'. This is to prevent Phase 3 from being served when not in Preempt.

LOAD RESISTOR INSTALLATION DETAIL

(install resistors as shown below)

ACCEPTABLE VALUES

VALUE (ohms)	WATTAGE
1.5K - 1.9K	25W (min)
2.0K - 3.0K	10W (min)

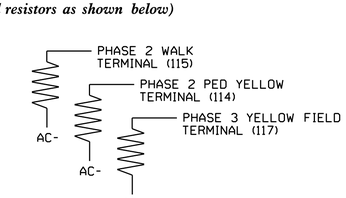

THIS ELECTRICAL DETAIL IS FOR
THE SIGNAL DESIGN: 05-0543
DESIGNED: September 2014
SEALED: 10/23/2014
REVISED: N/A

Electrical Detail - Final Design - Sheet 1 of 3

ELECTRICAL AND PROGRAMMING DETAILS FOR:

Prepared in the Offices of:

Transportation Mobility and Safety Division
STATE OF NORTH CAROLINA
DEPARTMENT OF TRANSPORTATION
Signal Management Section

750 N.Greenfield Pkwy,Garner,NC 27529

US 1-158 Bus. (N. Garnett St.)
at
I-85/US 158 Bypass Ramp
and SR 1271 (Bickett St.)

Division 5 Vance County Henderson

PLAN DATE: October 2014 REVIEWED BY: DS
PREPARED BY: S. Armstrong REVIEWED BY: JTR

REVISIONS	INIT.	DATE

SEAL
NORTH CAROLINA PROFESSIONAL SEAL 008453 ENGINEER JOHN T. ROWE, JR.

DocuSigned by:
John T. Rowe, Jr. 10/27/2014
641D60C145EE4F5...
DATE

SIG. INVENTORY NO. 05-0543

24-OCT-2014 07:26
S:\HITSS\04TIS\Signals\Workgroups\Sig Mgmt\Armstrong\050543_sm_ele_xxx.dgn
armstrong