PROJECT REFERENCE NO.	SHEET NO.
I-0914BA	Sig. 10.1

EDI MODEL 2010ECL-NC CONFLICT MONITOR PROGRAMMING DETAIL

(remove jumpers and set switches as shown)

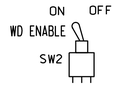

REMOVE DIODE JUMPERS 1-6, 1-7, 1-8, 1-9, 1-11, 1-12, 1-15, 2-5, 2-6, 2-8, 2-9, 2-10, 2-11, 2-12, 2-15, 3-7, 3-8, 3-11, 3-12, 3-16, 4-9, 4-10, 5-9, 5-10, 5-11, 5-12, 6-7, 6-8, 6-9, 6-10, 6-11, 6-12, 6-15, 7-8, 7-9, 7-11, 7-12, 7-15, 7-16, 8-9, 8-10, 8-11, 8-12, 8-15, 8-16, 9-10, 9-11, 9-12, 9-15, 10-11, 10-12, 10-15, 11-12, 11-15, 11-16, 12-15, and 12-16.

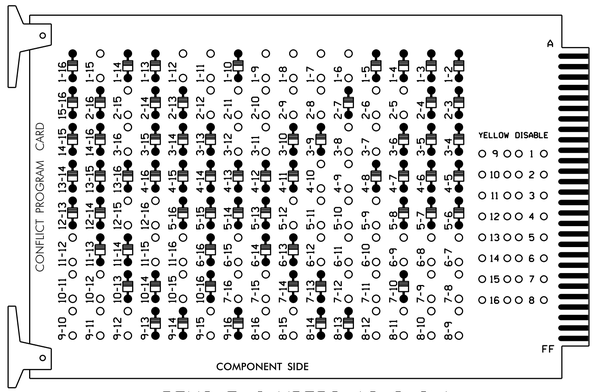

REMOVE JUMPERS AS SHOWN

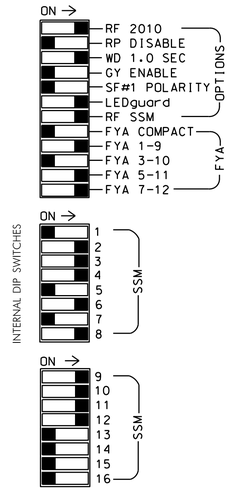

■ = DENOTES POSITION OF SWITCH

NOTES:

1. Card is provided with all diode jumpers in place. Removal of any jumper allows its channels to run concurrently.
2. Make sure jumpers SEL2-SEL5 are present on the monitor board.

NOTES

1. To prevent "flash-conflict" problems, insert red flash program blocks for all unused vehicle load switches in the output file. The installer shall verify that signal heads flash in accordance with the Signal Plans.
2. Ensure that Red Enable is active at all times during normal operation. To prevent Red Failures on unused monitor channels, tie unused red monitor inputs 1,5, 7,13,14,15 & 16 to load switch AC+ per the cabinet manufacturer's instructions.
3. Enable Simultaneous Gap-Out for all phases.
4. Program phases 2 and 6 for Start Up In Green.
5. Program phases 3 and 6 for 'STARTUP PED CALL'.
6. Program phases 2 and 6 for Yellow Flash, and overlap 1 as Wag Overlaps.

EQUIPMENT INFORMATION

CONTROLLER.....2070L
CABINET.....332 /W/ AUX
SOFTWARE.....ECONOLITE OASIS
CABINET MOUNT.....BASE
OUTPUT FILE POSITIONS...18 WITH AUX. OUTPUT FILE
LOAD SWITCHES USED.....S1,S2,S3,S4,S5,S6,S6P,S7,S8,S8P, S9,S10,S12,S13
PHASES USED.....1,2,3,3PED,4,5,6,6PED
OVERLAP "A".....1+2+4
OVERLAP "B".....2+4
OVERLAP "C".....3+5+6
OVERLAP "D".....1+2+3
OVERLAP "E".....1+3
OVERLAP "F".....3+6

SIGNAL HEAD HOOK-UP CHART

LOAD SWITCH NO.	S1	S2	S2P	S3	S4	S4P	S5	S6	S6P	S7	S8	S8P	S9	S10	S11	S12	S13	S14
PHASE	1	2	2 PED	3	4	4 PED	5	6	6 PED	OLE	OLF	3 PED	OLA	OLB	SPARE	OLC	OLD	SPARE
SIGNAL HEAD NO.	11★	21,22	NU	31, 32,33	41,42, 43,44	NU	51★	61,62	P61, P62	12★	63,64	P31, P32	11★	23,24	NU	51★	12★	NU
RED		128		116	101			134			107			A124				
YELLOW	✳	129		117	102		✳	135		✳	108			A125				
GREEN		130		118	103			136			109			A126				
RED ARROW													A121			A114	A101	
YELLOW ARROW													A122			A115	A102	
FLASHING YELLOW ARROW													A123			A116	A103	
GREEN ARROW	127						133			124								
✋									119			110						
🚶									121			112						

NU = Not Used

✳ Denotes install load resistor. See load resistor installation detail this sheet.

★ See pictorial of head wiring in detail below.

FYA SIGNAL WIRING DETAIL

(wire signal heads as shown)

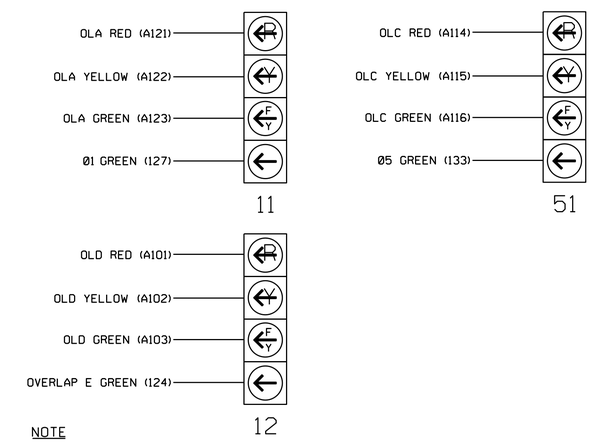

NOTE

The sequence display for signal heads 11, 12, and 51 requires special logic programming. See sheet 2 for programming instructions.

INPUT FILE POSITION LAYOUT

(front view)

		1	2	3	4	5	6	7	8	9	10	11	12	13	14
FILE "I"	U	Ø1	Ø1	Ø2	WIRED INPUT ⊗	Ø3	Ø3	Ø4	Ø4	SLOT EMPTY	SLOT EMPTY	SLOT EMPTY	SLOT EMPTY	Ø6 PED DC ISOLATOR	FS DC ISOLATOR
	L	1A NOT USED	1B ⊗⊗ WIRED INPUT	2A,2B Ø2 2C,2D		3A NOT USED	3B NOT USED	4A Ø4 4B	4C NOT USED					Ø3 PED DC ISOLATOR	ST DC ISOLATOR
FILE "J"	U	Ø5	Ø6	SLOT EMPTY	WIRED INPUT ⊗	SLOT EMPTY	SLOT EMPTY	SLOT EMPTY	SLOT EMPTY	SLOT EMPTY	SLOT EMPTY	SLOT EMPTY	SLOT EMPTY	SLOT EMPTY	SLOT EMPTY
	L	5A NOT USED	6A,6B Ø6 6C,6D												

EX.: 1A, 2A, ETC. = LOOP NO.'S

FS = FLASH SENSE
ST = STOP TIME

⊗ Wired Input - Do not populate slot with detector card
⊗⊗ Disable Channel 2

INPUT FILE CONNECTION & PROGRAMMING CHART

LOOP NO.	LOOP TERMINAL	INPUT FILE POS.	PIN NO.	INPUT ASSIGNMENT NO.	DETECTOR NO.	NEMA PHASE	CALL	EXTEND	FULL TIME DELAY	STRETCH TIME	DELAY TIME
1A[1]	TB2-1,2	I1U	56	18	1	1	Y	Y			15
	-	J4U	48	10	26	6	Y	Y			
1B[2]	TB2-5,6	I2U	39	1	2	1	Y	Y			20
	-	I2L	43	5	12	6	Y	Y			
2A,2B	TB2-9,10	I3U	63	25	32	2	Y	Y			
2C,2D	TB2-11,12	I3L	76	38	42	2	Y	Y			
3A	TB4-5,6	I5U	58	20	3	3	Y	Y			
3B	TB4-9,10	I6U	41	3	4	3	Y	Y			15
4A	TB6-1,2	I7U	65	27	34	4	Y	Y			3
4B	TB6-3,4	I7L	78	40	44	4	Y	Y			15
4C	TB6-5,6	I8U	49	11	24	4	Y	Y			5
5A[3]	TB3-1,2	J1U	55	17	5	5	Y	Y			20
	-	I4U	47	9	22	2	Y	Y			
6A,6B	TB3-5,6	J2U	40	2	6	6	Y	Y			
6C,6D	TB3-7,8	J2L	44	6	16	6	Y	Y			
PED PUSH BUTTONS											
P31,P32	TB8-8,9	I3L	70	32	PED 8	3 PED					
P61,P62	TB8-7,9	I3U	68	30	PED 6	6 PED					

NOTE:
INSTALL DC ISOLATOR IN INPUT FILE SLOT I13.

REINSTALL JUMPER →

[1] Add jumper from I1-W to J4-W, on rear of input file.

[2] Add jumper from I2-F to I2-W, on rear of input file.

[3] Add jumper from J1-W to I4-W, on rear of input file.

INPUT FILE POSITION LEGEND: J2L
FILE J
SLOT 2
LOWER

LOAD RESISTOR INSTALLATION DETAIL

(install resistors as shown below)

ACCEPTABLE VALUES

VALUE (ohms)	WATTAGE
1.5K - 1.9K	25W (min)
2.0K - 3.0K	10W (min)

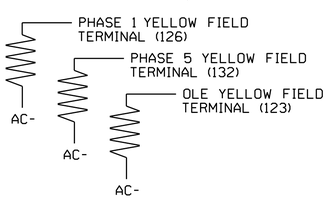

! IMPORTANT: Reinstall Phase 1 load resistor as shown above.

THIS ELECTRICAL DETAIL IS FOR
THE SIGNAL DESIGN: 05-1919
DESIGNED: September 2014
SEALED: 10/27/2014
REVISED: N/A

Electrical Detail - Final Design - Sheet 1 of 4

ELECTRICAL AND PROGRAMMING DETAILS FOR:

Prepared in the Offices of:
Transportation Mobility and Safety Division
STATE OF NORTH CAROLINA DEPARTMENT OF TRANSPORTATION
Signals Management Section
750 N.Greenfield Pkwy,Garner,NC 27529

NC 39 (W. Andrews Ave.)
at
I-85 NB/US 158 EB Ramps and
Ramsey Street/Outlet City

Division 5 Vance County Henderson

PLAN DATE: October 2014 REVIEWED BY: JTR
PREPARED BY: S. Armstrong REVIEWED BY:

REVISIONS	INIT.	DATE

SEAL
NORTH CAROLINA PROFESSIONAL SEAL 008453 ENGINEER JOHN T. ROWE, JR.

DocuSigned by: John T. Rowe, Jr. 641D60C145EE4F5... 10/30/2014
DATE

SIG. INVENTORY NO. 05-1919

30-OCT-2014 06:58
S:\TTSSGU\ITS\Signals\Workgroups\Sig Man\Armstrong\05191 9_sm_ele_xxx.dgn
armstrong