PROJECT REFERENCE NO.	SHEET NO.
I-0914BA	Sig. 12.3

EMERGENCY VEHICLE PREEMPTION PROGRAMMING DETAIL

(program controller as shown below)

From Main Menu press 'A' (Preemption), then '1' (Standard Preemptions). Press 'NEXT' to advance to Preemption #2.

```
   PREEMPTION  #2  SETTINGS (NEXT:1-10)
INTERVAL/TIMING  |  CLEAR/DWELL PHASES
  GRN YEL  RED   |123456789101112131415 16
1 255  4.5  2.8   |  X    X
2   0  0.0  0.0   |
3   0  0.0  0.0   |
4   0  0.0  0.0   |
5   1  0.0  0.0   | X   X
EXIT CALLS        |
            OPTIONS
PRIORITY (Y/N TO SELECT) ............MED
DELAY TIMER (0-255 SEC) .............*
MIN GREEN BEFORE PRE (0= DEFAULT)....1
PED CLEAR BEFORE PRE (0= DEFAULT)....0
YELLOW CLEAR BEFORE PRE (0= DEFAULT).0.0
RED CLEAR BEFORE PRE (0= DEFAULT)....0.0
DWELL MIN TIMER (0-255 SEC) .........*
DWELL MAX TIMER (0=OFF,1-255MIN) ....0
DWELL HOLD-OVER TIMER (0-255) .......0
LATCH CALL? .........................Y
LINK TO NEXT PREEMPT? ...............N
ENABLE BACKUP PROTECTION? ...........N
HOLD CLEAR 1 PHASES DURING DELAY? ...N
FAST GREEN FLASH DWELL PHASES? ......N
PED CLEARANCE THROUGH YELLOW? .......N
INHIBIT OVERLAP GREEN EXTENSION? ....N
SERVICE DURING SOFTWARE FLASH? ......N
REST IN RED DURING DWELL INTERVAL? ..N
FLASH DWELL INTERVAL? ...............N
ALLOW PEDS IN DWELL INTERVAL? .......N
RE-TIME DWELL INTERVAL? .............Y
OVERLAPS:                | ABCDEFGHIJKLMNOP
DWELL INT FLASH YELLOW   |
OMIT OVERLAPS:           |
```

* Denotes timing to be determined in field.

PREEMPT 2 AC ISOLATOR (MODEL 252) OUTPUT PROGRAMMING DETAIL

(set DIP switches as shown below)

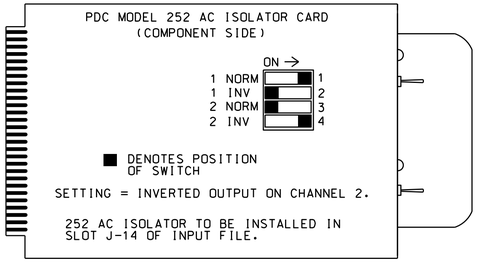

NOTE: IF ANOTHER MANUFACTURER TYPE OF AC ISOLATOR IS USED, OUTPUT PROGRAMMING IS LIKELY NOT TO EQUATE TO THAT SHOWN ABOVE.

EV Preemption Control Box Wiring Detail

(wire as shown below)

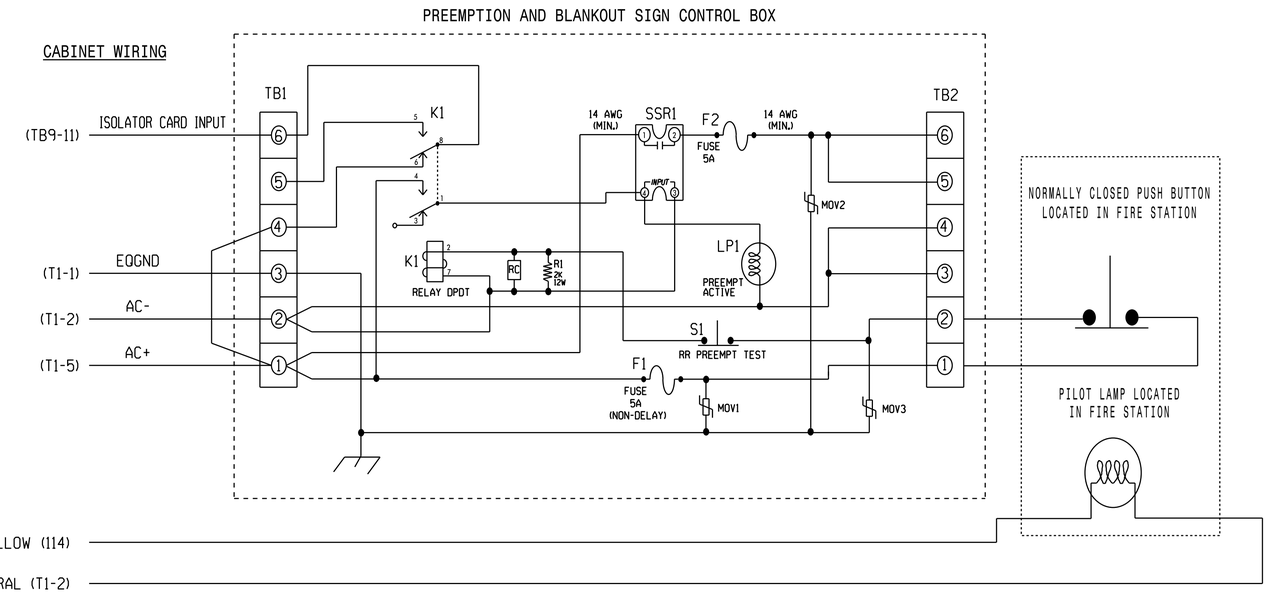

NOTES

1. Relay K1 is shown in the energized (Preempt not active) normal operation state.
2. Relay K1 is a DPDT with 120VAC coil with an octal base.
3. Relay SSR1 is a SPST (normally open) Solid State Relay with AC input and AC (25 amp) output.
4. AC Isolator Card shall activate preemption upon removal of AC+ from the input (as shown above). To accomplish this, set invert dip switch on AC Isolator Card.
5. IMPORTANT!! Terminal TB9-12 (on input panel) shall be connected to AC neutral (jumper may have to be added).

FRONT VIEW

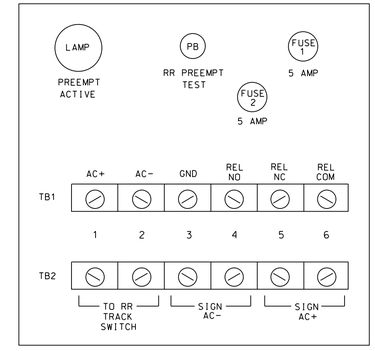

LAMP NOTES

1. If field terminal 114 has a conflict monitor wire attached, remove, tape, and label wire.
2. Make sure load resistors are in place as shown in the Load Resistor Installation Detail on sheet 1.
3. Install a loadswitch in Output File Slot S3.

THIS ELECTRICAL DETAIL IS FOR
THE SIGNAL DESIGN: 05-0543
DESIGNED: September 2014
SEALED: 10/23/2014
REVISED: N/A

Electrical Detail - Final Design - Sheet 3 of 3

ELECTRICAL AND PROGRAMMING DETAILS FOR:

Prepared in the Offices of:
Transportation Mobility and Safety Division
STATE OF NORTH CAROLINA
DEPARTMENT OF TRANSPORTATION
Signals Management Section
750 N.Greenfield Pkwy,Garner,NC 27529

US 1-158 Bus. (N. Garnett St.)
at
I-85/US 158 Bypass Ramp
and SR 1271 (Bickett St.)

Division 5 Vance County Henderson

PLAN DATE:	October 2014	REVIEWED BY:	DS JTR
PREPARED BY:	S. Armstrong	REVIEWED BY:	

REVISIONS	INIT.	DATE

SEAL
NORTH CAROLINA PROFESSIONAL SEAL 008453 ENGINEER JOHN T. ROWE, JR.

DocuSigned by: John T. Rowe, Jr. 10/27/2014
641D60C145EE4F5... DATE

SIG. INVENTORY NO. 05-0543

24-OCT-2014 07:27
S:\TSSGU\ITS Signals\Workgroups\Sig Mon\Armstrong\050543_sm_ele_xxx.dgn
armstrong