STATE	PROJECT NO.	SHEET NO.	TOTAL SHEETS
N.C.	10CR.10901.40,ETC.	21	
F.A. PROJECT NO.			

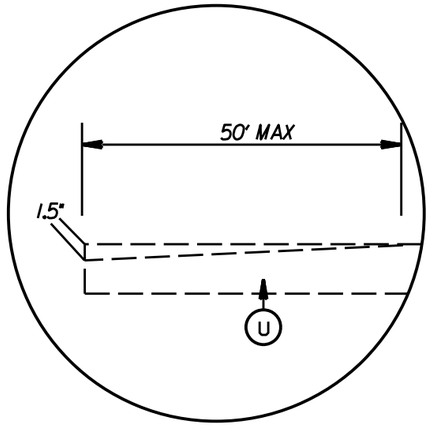

DETAIL FOR INCIDENTAL MILLING (0" TO 1.5")

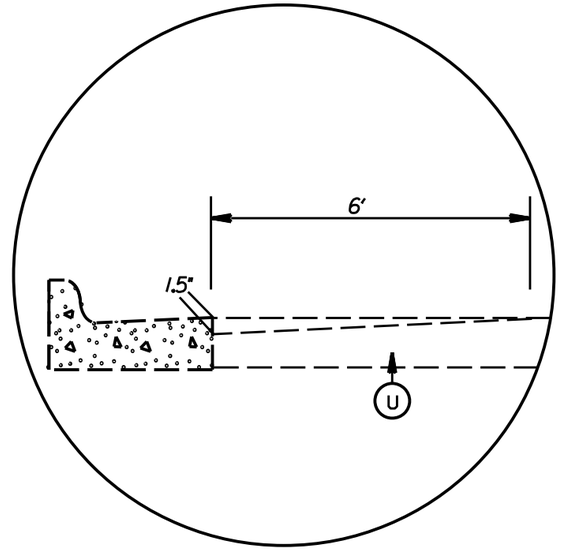

DETAIL FOR PROFILE MILLING (0" TO 1.5")

PAVEMENT SCHEDULE

C1	PROP. APPROX. 1.5" ASPHALT CONC. SURFACE COURSE, TYPE S9.5C, AT AN AVERAGE RATE OF 168 LBS. PER SQ. YD.
C2	PROP. APPROX. 1.5" ASPHALT CONC. SURFACE COURSE, TYPE S9.5B, AT AN AVERAGE RATE OF 168 LBS. PER SQ. YD.
C3	PROP. APPROX. 1.0" ASPHALT CONC. SURFACE COURSE, TYPE SF9.5A, AT AN AVERAGE RATE OF 110 LBS. PER SQ. YD.
C4	PROP. ASPHALT SURFACE TREATMENT TO BE PLACED AT THE END OF EACH DAY'S PRODUCTION.
D1	PROP. APPROX. 2.5" ASPHALT CONC. INTERMEDIATE COURSE, TYPE I19.0C, AT AN AVERAGE RATE OF 285 LBS. PER SQ. YD.
D2	PROP. APPROX. 2.5" ASPHALT CONC. INTERMEDIATE COURSE, TYPE I19.0B, AT AN AVERAGE RATE OF 285 LBS. PER SQ. YD.
U	EXISTING PAVEMENT
T1	SHOULDER RECONSTRUCTION
V1	0 - 1.5" PROFILE MILLING
V2	MILLING OF EXISTING PAVEMENT, 1.5" IN DEPTH.
V3	MILLING OF EXISTING ASPHALT, 2.5" IN DEPTH
Z	FULL DEPTH RECLAMATION

PATCHING DETAIL # 1

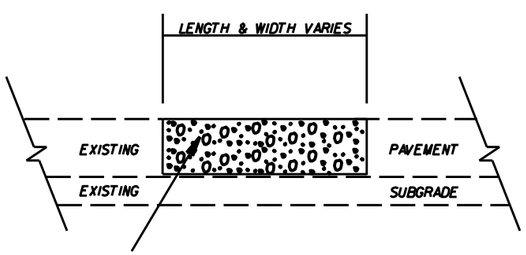

RATE IS VARIABLE AND SHALL BE AS DIRECTED BY THE ENGINEER. ASPHALT TYPE I19.0C SHALL BE PLACED.

PATCHING DETAIL #2

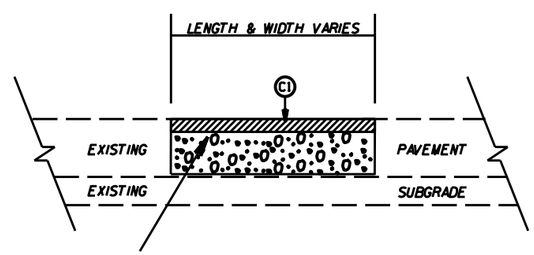

RATE IS VARIABLE AND SHALL BE AS DIRECTED BY THE ENGINEER. ASPHALT TYPE I19.0C SHALL BE PLACED.

NOTES:

1: LEVELING COURSE TO BE PLACED AT LOCATIONS AS DIRECTED BY THE ENGINEER. USE PATCHING DETAIL # 2 ON MAP 12.

2: ON MAPS 5,6,11,14,17 AND 22 BRIDGE TO BE MILLED 1.5" AND INLAID WITH 1.5" S9.5. (MIX TYPE IDENTIFIED ON TYPICALS.)

3: ON MAP 27, DO NOT MILL OR RESURFACE OVER BRIDGE.

4: SHOULDER RECONSTRUCTION WILL BE AS DIRECTED BY THE ENGINEER.

5: WIDENING ON MAPS 16 - 19 AND 30 - 35, TO BE DONE BY STATE FORCES.

MAPS 1-26
EXCEPT MAP 12

NC 200 (DICKERSON BLVD/US 74 EB (MAP 12)

2015-2016
UNION COUNTY RESURFACING

SCALE	-NA-		REVISIONS
DATE	12/14		
DWG. BY	AMO		
DESIGN BY	AMO		
APPROVED	CLA		