PROJECT REFERENCE NO.	SHEET NO.
W-5316	2A-1
ROADWAY DESIGN ENGINEER	PAVEMENT DESIGN ENGINEER
SEAL 18494 — ANTHONY AARON HOWSER — NORTH CAROLINA PROFESSIONAL ENGINEER — DocuSigned by: Anthony Howser 1/12/2015 — 3F7D4DCE8E304ED...	SEAL 022896 — CLARK S. MORRISON — NORTH CAROLINA PROFESSIONAL ENGINEER — DocuSigned by: Clark S. Morrison 1/13/2015 — 8DA1YDDDTEDJRCK...

5/14/99

PAVEMENT SCHEDULE

C1	PROP. APPROX. 1.5″ ASPHALT CONCRETE SURFACE COURSE, TYPE S9.5B AT AN AVERAGE RATE OF 168 LBS. PER SQ. YD.
C2	PROP. APPROX. 3″ DEPTH ASPHALT CONCRETE SURFACE COURSE, TYPE S9.5B, AT AN AVERAGE RATE OF 168 LBS. PER SQ. YD. IN EACH OF TWO LAYERS.
C3	PROP. VAR. DEPTH ASPHALT CONCRETE SURFACE COURSE, TYPE S9.5B, AT AN AVERAGE RATE OF 112 LBS. PER SQ. YD. PER 1″ DEPTH. TO BE PLACED IN LAYERS NOT LESS THAN 1.5″ OR GREATER THAN 2″ IN DEPTH.
D1	PROP. APPROX. 3.0″ ASPHALT CONCRETE INTERMEDIATE COURSE, TYPE I19.0B, AT AN AVERAGE RATE OF 342 LBS, PER SQ. YD.
D2	PROP. VAR. DEPTH ASPHALT CONCRETE INTERMEDIATE COURSE, TYPE I 19.0B, AT AN AVERAGE RATE OF 114 LBS, PER SQ. YD. PER 1″ DEPTH, TO BE PLACED IN LAYERS NOT LESS THAN 2.5″ IN DEPTH OR GREATER THAN 4″ IN DEPTH.
E1	PROP. APPROX. 5.5″ ASPHALT CONCRETE BASE COURSE, TYPE B25.0B AT AN AVERAGE RATE OF 627 LBS. PER SQ. YD.
E2	PROP. APPROX. 6.0″ ASPHALT CONCRETE BASE COURSE, TYPE B25.0B AT AN AVERAGE RATE OF 342 LBS. PER SQ. YD. IN EACH OF TWO LAYERS.
E3	PROP. APPROX. 7.0″ ASPHALT CONCRETE BASE COURSE, TYPE B25.0B AT AN AVERAGE RATE OF 399 LBS. PER SQ. YD. IN EACH OF TWO LAYERS.
E4	PROP. VAR. DEPTH ASPHALT CONCRETE BASE COURSE, TYPE B 25.0B, AT AN AVERAGE RATE OF 114 LBS, PER SQ. YD. PER 1″ DEPTH, TO BE PLACED IN LAYERS NOT LESS THAN 3.0″ IN DEPTH OR GREATER THAN 5 1/2″ IN DEPTH.
T	EARTH MATERIAL.
U	EXISTING PAVEMENT.
W	VARIABLE DEPTH ASPHALT PAVEMENT (SEE WEDGING DETAIL)

NOTE: PAVEMENT EDGE SLOPE ARE 1:1 UNLESS SHOWN OTHERWISE.

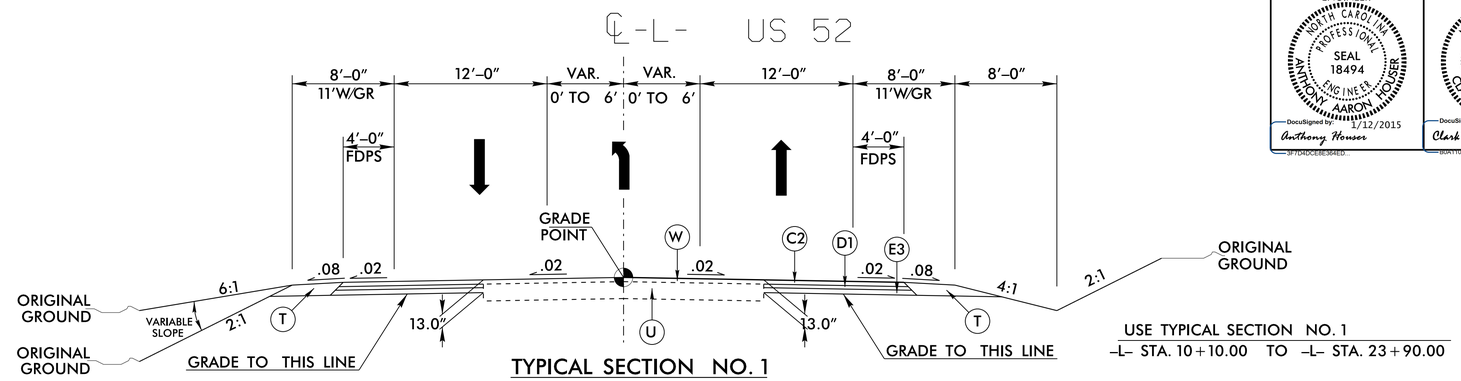

TYPICAL SECTION NO. 1

USE TYPICAL SECTION NO. 1
–L– STA. 10+10.00 TO –L– STA. 23+90.00

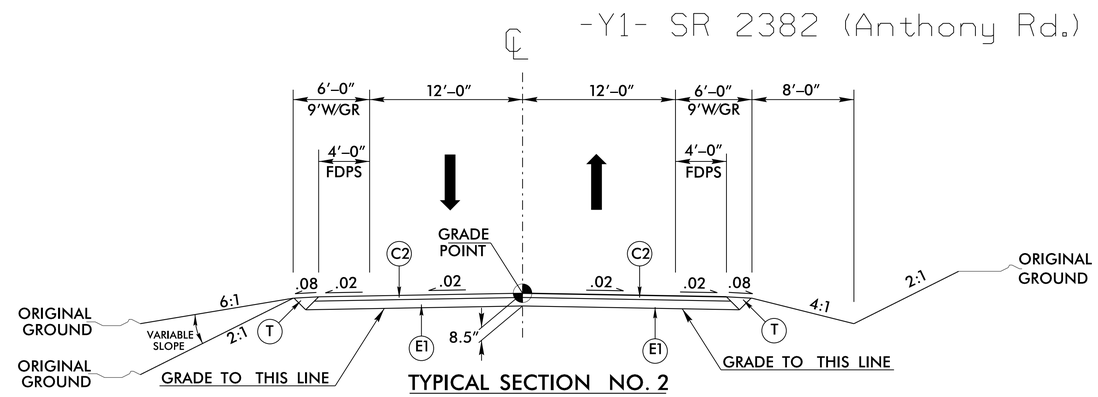

TYPICAL SECTION NO. 2

USE TYPICAL SECTION NO. 3
–Y1– STA. 10+18.00 TO –Y1– STA. 11+13.38

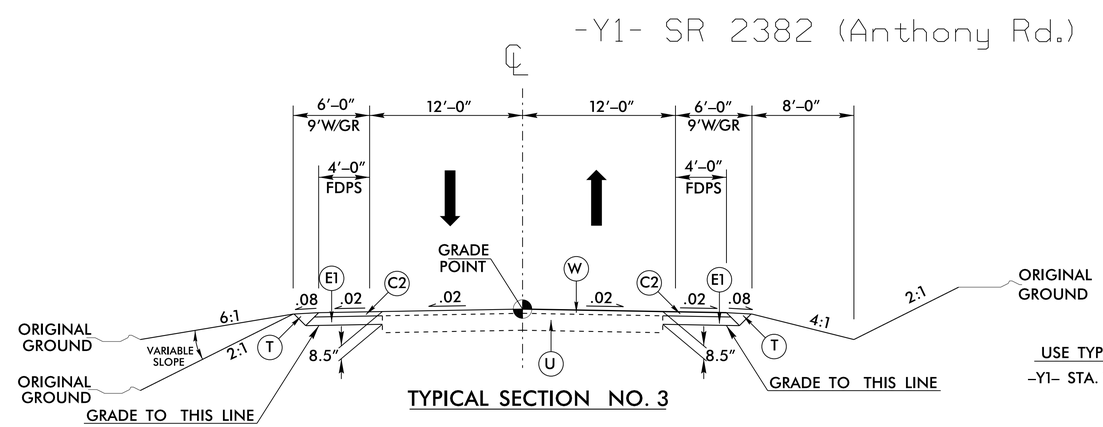

TYPICAL SECTION NO. 3

USE TYPICAL SECTION NO. 2
–Y1– STA. 11+13.38 TO –Y1– STA. 13+15.00

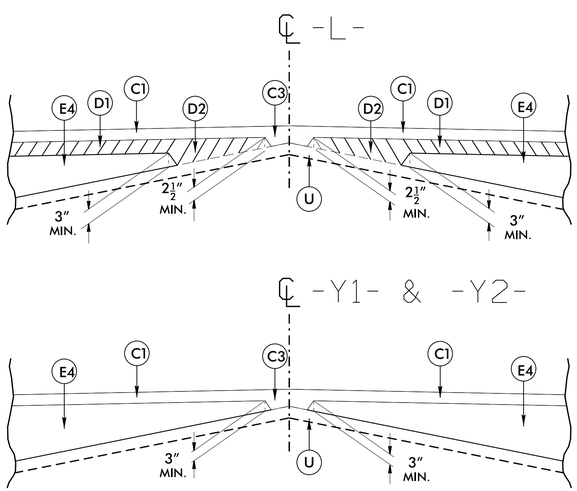

Details Showing Method of Wedging

23-DEC-2014 09:06
R:\Roadway\Proj\W5316_Rdy_typ2a-1-2.dgn
$$$$USERNAME$$$$