PROJECT REFERENCE NO.	SHEET NO.
W-5316	2A-2

ROADWAY DESIGN ENGINEER
NORTH CAROLINA PROFESSIONAL SEAL 18494 ENGINEER ANTHONY AARON HOUSER
DocuSigned by: Anthony Houser 1/12/2015

PAVEMENT DESIGN ENGINEER
NORTH CAROLINA PROFESSIONAL SEAL 022896 ENGINEER CLARK S. MORRISON
DocuSigned by: Clark S. Morrison 1/13/2015

C1	1½" S9.5B
C2	3" S9.5B
C3	VAR. S9.5B
D1	3" I19.0B
D2	VAR. I19.0B
E1	5.5" B25.0B
E2	6.0" B25.0B
E3	7.0" B25.0B
E4	VAR. B25.0B
T	EARTH MATERIAL
U	EXIST. PAVEMENT
W	WEDGING

-Y2- SR 2319 (Crescent Rd.)

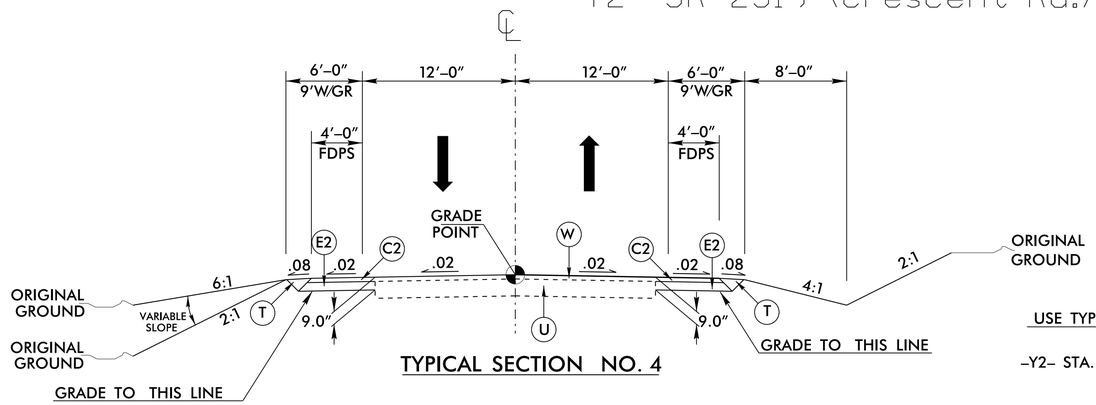

TYPICAL SECTION NO. 4

USE TYPICAL SECTION NO. 2

-Y2- STA. 11+63.00 TO -Y2- STA. 13+40.49

-Y2- SR 2319 (Crescent Rd.)

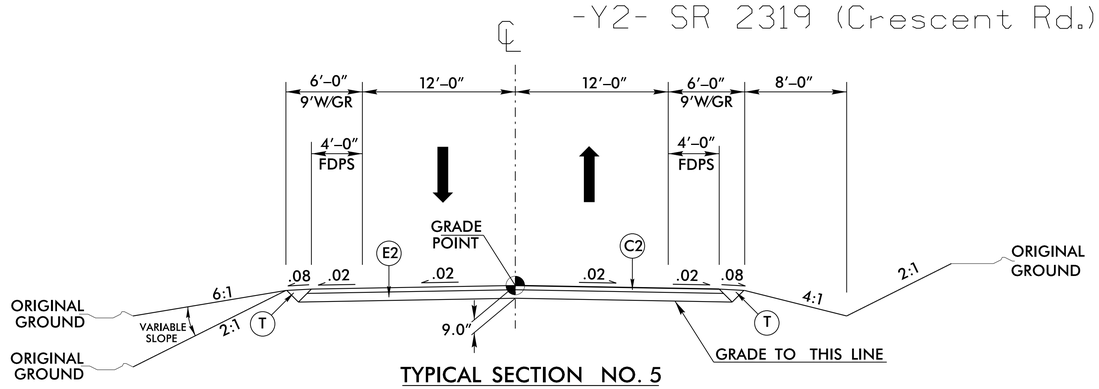

TYPICAL SECTION NO. 5

USE TYPICAL SECTION NO. 3

-Y2- STA. 13+40.49 TO -Y1- STA. 14+45.61

-Y3- SR 2382 (Gold Knob Rd.) Turn Around

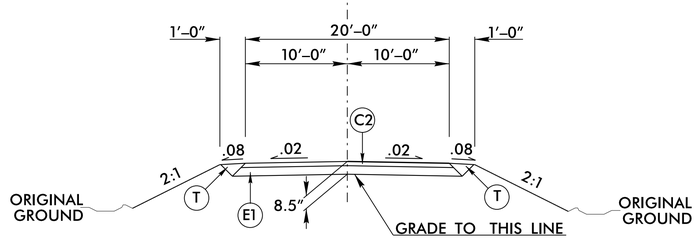

TYPICAL SECTION NO. 6

USE TYPICAL SECTION NO. 4

-Y3- STA. 10+68.00 (END EXISTING PAVEMENT)

5/14/99
23-DEC-2014 09:06
R:\Roadway\Proj\W5316_Rdy_typ2a-1-2.dgn
$$$$USERNAME$$$$