DocuSign Envelope ID: 6F43BBDB-21EE-403D-B7D9-F029B1CC8FA6

PROJECT REFERENCE NO.	SHEET NO.
R-2123CG	ITS-4

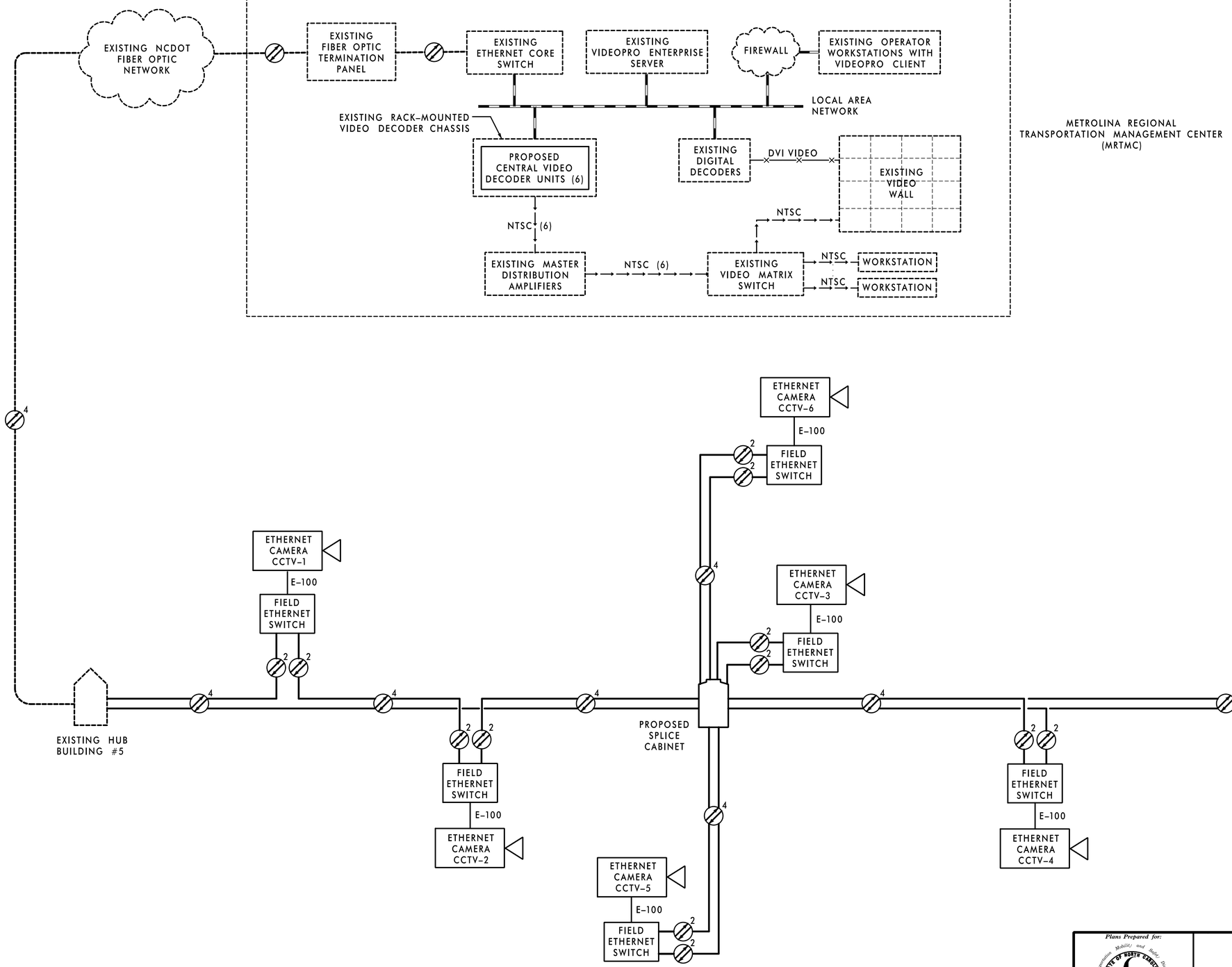

LEGEND

- EXISTING FIBER OPTIC CABLE (1000 BASE FX ETHERNET)
- PROPOSED FIBER OPTIC CABLE (1000 BASE FX ETHERNET)
- FIBER PAIR (XMIT & RECV) X=TOTAL NUMBER OF FIBERS
- 1000 BASE TX ETHERNET
- DVI VIDEO
- ANALOG VIDEO
- EXISTING HUB BUILDING
- EXISTING SPLICE CABINET
- PROPOSED SPLICE CABINET
- EXISTING DEVICE
- PROPOSED DEVICE

Plans Prepared for: Transportation Mobility and Safety Division — Intelligent Transportation Systems — NORTH CAROLINA DEPARTMENT OF TRANSPORTATION
750 N. Greenfield Pkwy., Garner, NC 27529

HNTB NORTH CAROLINA, P.C.
343 E. Six Forks Road, Suite 200
Raleigh, North Carolina 27609
NC License No: C-1554

NETWORK BLOCK DIAGRAM

DIVISION 10 — MECKLENBURG & CABARRUS COUNTIES — CHARLOTTE

PLAN DATE:	DECEMBER 2014	REVIEWED BY:	A.D. KLINKSIEK
PREPARED BY:	T.R. TERRELL	REVIEWED BY:	H.L. WINSTEAD

SCALE: NONE

REVISIONS	INIT.	DATE

SEAL: NORTH CAROLINA PROFESSIONAL SEAL 07983 ENGINEER HARVEY L. WINSTEAD, JR.

DocuSigned by: H L Winstead — F62917C5CE07429... — 12-18-2014
SIGNATURE — DATE

CADD Filename: R2123CG ITS-04.dgn