DocuSign Envelope ID: 6F43BBDB-21EE-403D-B7D9-F029B1CC8FA6

PROJECT REFERENCE NO.	SHEET NO.
R-2123CG	ITS-32

SEE SHEET ITS–28 FOR SPLICING DETAILS WITHIN SPLICE CABINET #1

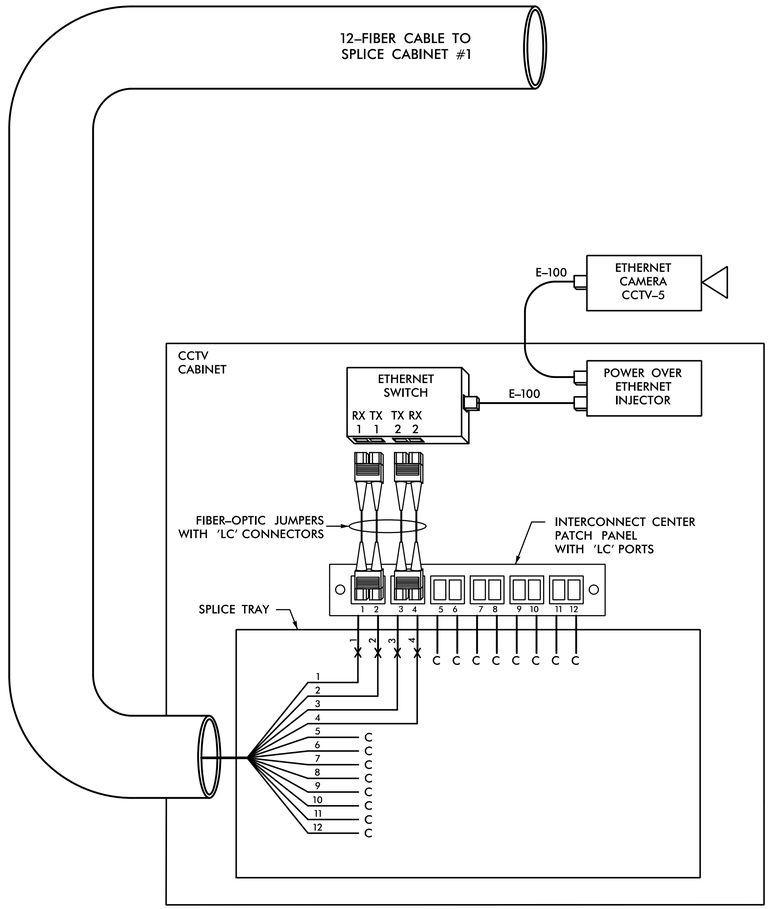

CCTV–5

SEE SHEET ITS–28 FOR SPLICING DETAILS WITHIN SPLICE CABINET #1

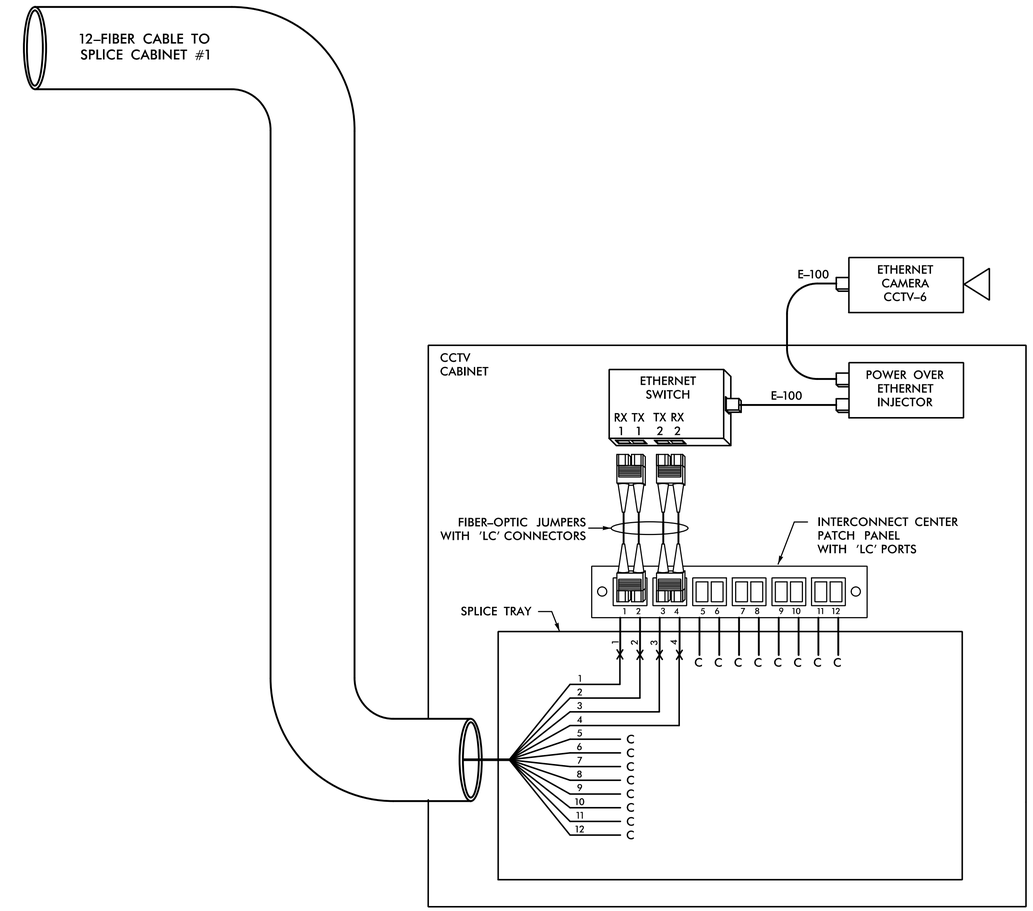

CCTV–6

LEGEND

COLOR CODE TIA/EIA 598–C

(1)	BLUE	(7)	RED
(2)	ORANGE	(8)	BLACK
(3)	GREEN	(9)	YELLOW
(4)	BROWN	(10)	VIOLET
(5)	SLATE	(11)	ROSE
(6)	WHITE	(12)	AQUA

X = NEW FUSION SPLICE INDIVIDUAL FIBER

● = EXISTING FUSION SPLICE

C = CAP AND SEAL

EXPRESS = EXPRESS ENTIRE BUFFER TUBE THROUGH WITHOUT CUTTING

BUFFER SPLICE = SPLICE ALL FIBERS IN BUFFER TUBE COLOR TO COLOR

NOTES

1. UNUSED FIBERS LEFT COILED AND STORED IN SPLICE TRAY.
2. UNUSED BUFFER TUBES LEFT COILED AND STORED IN SPLICE ENCLOSURE.
3. ETHERNET SWITCH TERMINATION CONFIGURATIONS ARE GENERIC. CONTRACTOR IS RESPONSIBLE FOR DETERMINING/ ENSURING PROPER TERMINATION.

HNTB

HNTB NORTH CAROLINA, P.C.
343 E. Six Forks Road, Suite 200
Raleigh, North Carolina 27609
NC License No: C-1554

Plans Prepared for:

Transportation Mobility and Safety Partnerships Innovative Solutions

DEPARTMENT OF TRANSPORTATION

750 N. Greenfield Pkwy., Garner, NC 27529

SCALE: NONE

CCTV-5 & 6
FIBER-OPTIC SPLICE DETAIL

DIVISION 10 MECKLENBURG CO. CHARLOTTE

PLAN DATE:	DECEMBER 2014	REVIEWED BY:	A.D. KLINKSIEK
PREPARED BY:	T.R. TERRELL	REVIEWED BY:	H.L. WINSTEAD

REVISIONS	INIT.	DATE

SEAL

NORTH CAROLINA PROFESSIONAL SEAL 07983 ENGINEER HARVEY L. WINSTEAD, JR.

DocuSigned by: H L Winstead 12-18-2014
F62917C5CE07429
SIGNATURE DATE

CADD Filename: R2123CG_ITS-32.dgn