PROJECT NO.	SHEET NO.	TOTAL SHEETS
I–5372	2	

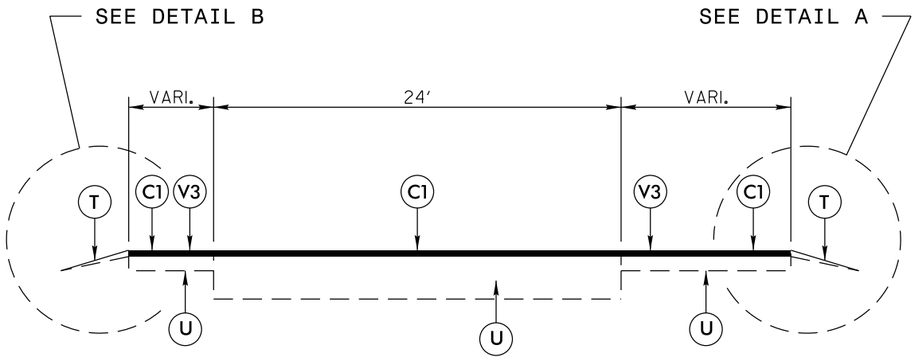

TYPICAL SECTION NO. 1

CLIP/CUT SHOULDERS PER NCDOT STANDARD
DRAWING 560.01 & 560.02
BEFORE RE–INSTALLING GUARDRAIL
IN AREAS AS DIRECTED BY ENGINEER

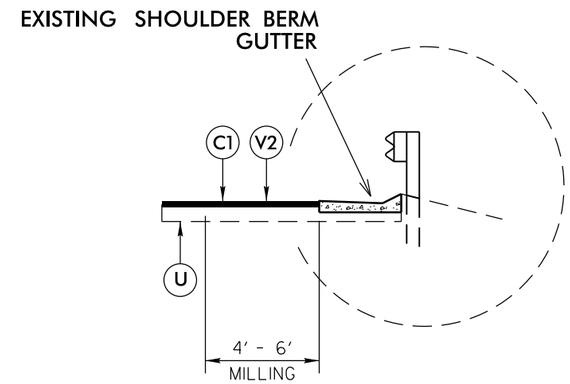

DETAIL A

VARIOUS LOCATIONS

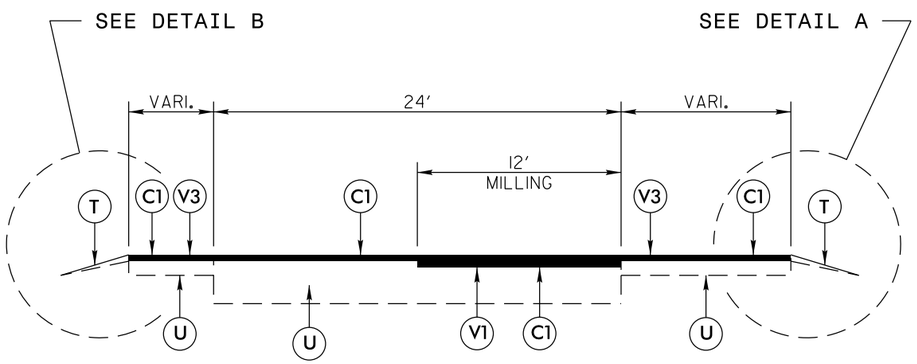

TYPICAL SECTION NO. 2

EASTBOUND FROM BRIDGE 540 TO BRIDGE 429
WESTBOUND FROM NC 213 TO BRIDGE 541

CLIP/CUT SHOULDERS PER NCDOT STANDARD
DRAWING 560.01 & 560.02
BEFORE RE–INSTALLING GUARDRAIL
IN AREAS AS DIRECTED BY ENGINEER

PAVEMENT SCHEDULE	
C1	PROP. APPROX. 1-½" ASPHALT CONCRETE SURFACE COURSE, TYPE S9.5C, AT AN AVERAGE RATE OF 168 LBS. PER SQ. YARD
T	SHOULDER RECONSTRUCTION
U	EXISTING PAVEMENT
V1	MILLING ASPHALT PAVEMENT, 1½" DEPTH
V2	MILLING ASPHALT PAVEMENT, 0" TO 1½" DEPTH
V3	MILLED RUMBLE STRIPS (ASPHALT CONCRETE)

MADISON COUNTY