PROJECT REFERENCE NO.	SHEET NO.
B-5103	ECS-2

USE FOR LIGHTING CONSTRUCTION ONLY

NTS

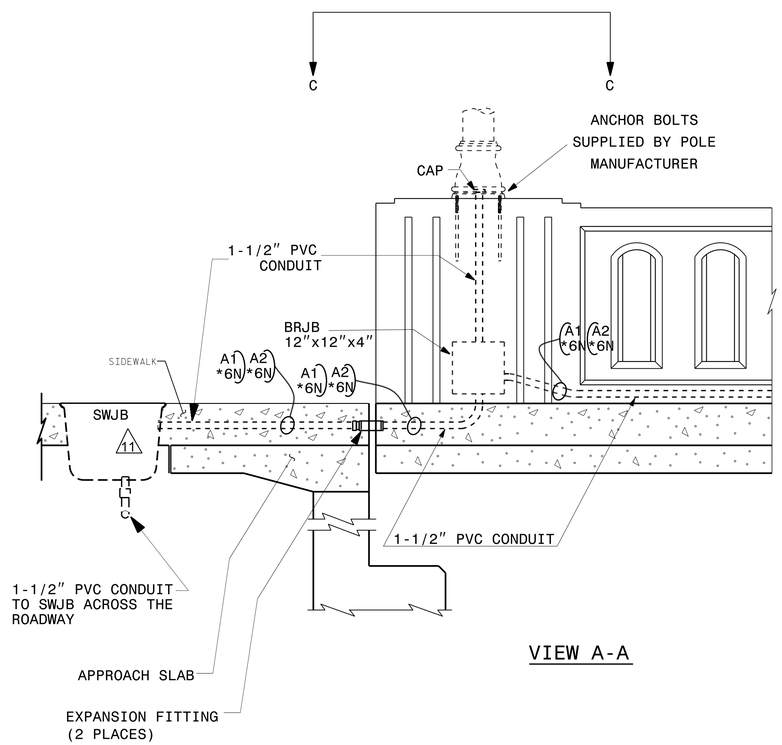

VIEW A-A

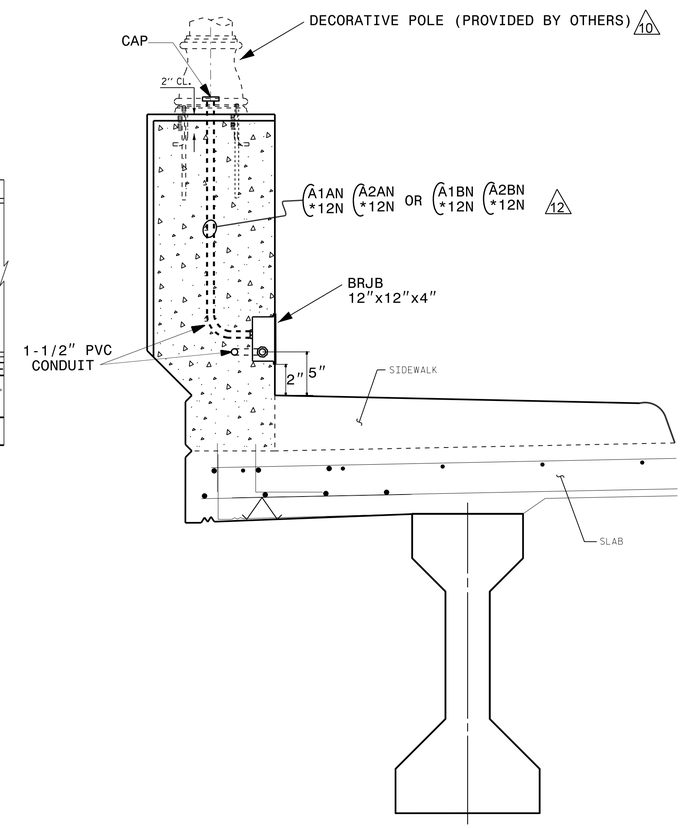

VIEW B-B

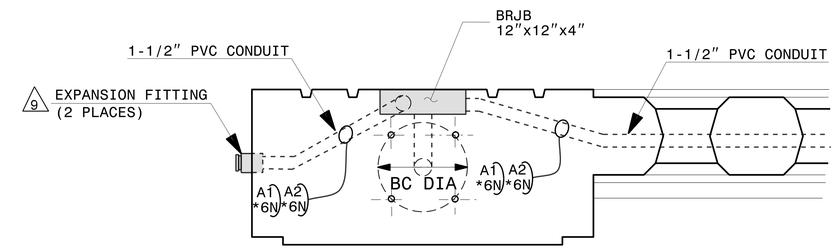

VIEW C-C

PROJECT NO. B-5103

NEW HANOVER COUNTY

STATION: STA. 16+84.96 -L-

STATE OF NORTH CAROLINA
DEPARTMENT OF TRANSPORTATION
RALEIGH
ROADWAY DESIGN LIGHTING & ELECTRICAL

ELECTRICAL CONDUIT SYSTEM

3RD STREET BRIDGE
OVER ABANDON RAILROAD
IN WILMINGTON

NORTH CAROLINA PROFESSIONAL SEAL 022582 ENGINEER PAUL KI-BUN CHAN
DocuSigned by: Paul Chan 11/18/2014
E85C4B9BEEE442...

SEE PROJECT SPECIAL PROVISIONS TITLED "ELECTRICAL CONDUIT SYSTEM" FOR MATERIALS, COSTRUCTION METHOD AND PAYMENT.

REVISIONS							
NO.	BY:	DATE:	NO.	BY:	DATE:	SHEET NO.	ECS-2
1			3			TOTAL SHEETS	2
2			4				

DRAWN BY : A. BROWN DATE : 11/21/14
CHECKED BY : P. CHAN DATE : 11/21/14