DocuSign Envelope ID: FFACE48C-EF9B-4723-AFC0-B1A1551A9670

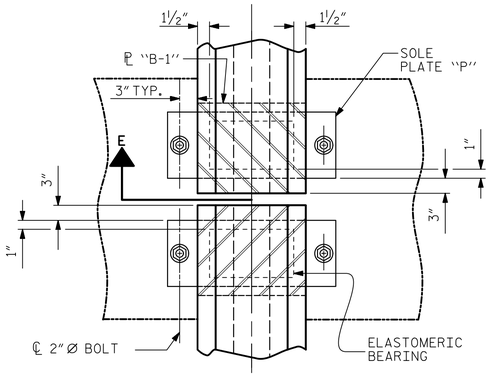

SECTION AT BENT

(FIXED)

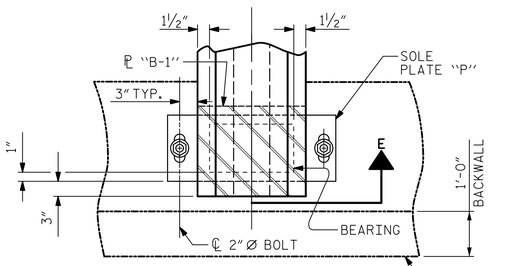

SECTION AT END BENT

(EXPANSION)

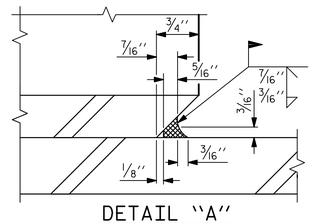

DETAIL "A"

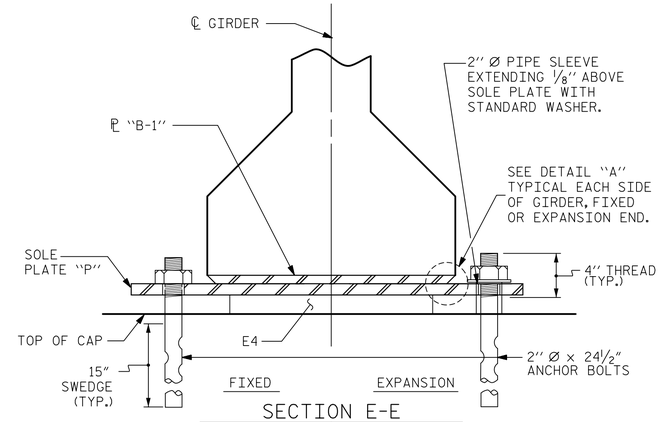

SECTION E-E

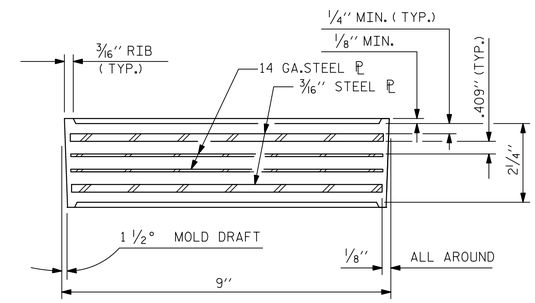

TYPICAL SECTION OF ELASTOMERIC BEARINGS

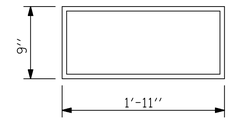

E4 (48 REQ'D)

PLAN VIEW OF ELASTOMERIC BEARING

TYPE V

NOTES

AT ALL FIXED POINTS OF SUPPORT, NUTS FOR ANCHOR BOLTS ARE TO BE TIGHTENED FINGER TIGHT AND THEN BACKED OFF ½ TURN. THE THREAD OF THE NUT AND BOLT SHALL THEN BE BURRED WITH A SHARP POINTED TOOL.

THE 2" Ø PIPE SLEEVE SHALL BE CUT FROM SCHEDULE 40 PVC PLASTIC PIPE. THE PVC PLASTIC PIPE SHALL MEET THE REQUIREMENTS OF ASTM D1785.

STEEL SOLE PLATES, ANCHOR BOLTS, NUTS, AND WASHERS SHALL BE GALVANIZED IN ACCORDANCE WITH THE STANDARD SPECIFICATIONS.

PRIOR TO WELDING, GRIND THE GALVANIZED SURFACE OF THE PORTION OF THE EMBEDDED PLATE AND SOLE PLATE THAT ARE TO BE WELDED. AFTER WELDING, DAMAGED GALVANIZED SURFACES SHALL BE REPAIRED IN ACCORDANCE WITH THE STANDARD SPECIFICATIONS.

WHEN WELDING THE SOLE PLATE TO THE EMBEDDED PLATE IN THE GIRDER, USE TEMPERATURE INDICATING WAX PENS, OR OTHER SUITABLE MEANS, TO ENSURE THAT THE TEMPERATURE OF THE SOLE PLATE DOES NOT EXCEED 300°F. TEMPERATURES ABOVE THIS MAY DAMAGE THE ELASTOMER.

SOLE PLATE "P", BOLTS, NUTS, WASHERS, AND PIPE SLEEVE SHALL BE INCLUDED IN THE PAY ITEM FOR PRESTRESSED CONCRETE GIRDERS.

ANCHOR BOLTS SHALL MEET THE REQUIREMENTS OF ASTM A449. NUTS SHALL MEET THE REQUIREMENTS OF AASHTO M291-DH OR AASHTO M292-2H. WASHERS SHALL MEET THE REQUIREMENTS OF AASHTO M293. NO SHOP DRAWINGS ARE REQUIRED FOR ANCHOR BOLTS, NUTS AND WASHERS. SHOP INSPECTION IS REQUIRED.

ALL SURFACES OF BEARING PLATES SHALL BE SMOOTH AND STRAIGHT.

THE ELASTOMER IN THE STEEL REINFORCED BEARINGS SHALL HAVE A SHEAR MODULUS OF 0.160 KSI, IN ACCORDANCE WITH AASHTO M251.

FOR STEEL REINFORCED ELASTOMERIC BEARINGS, SEE SPECIAL PROVISIONS.

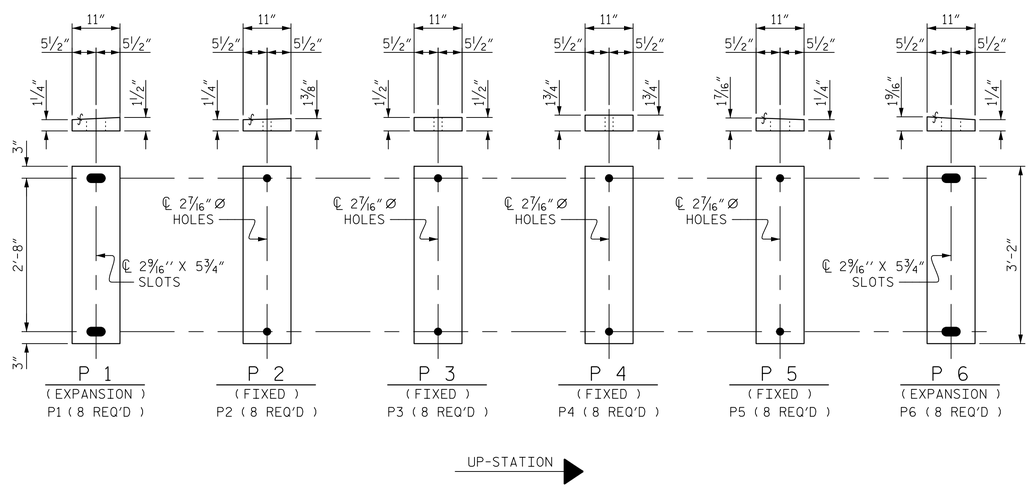

SOLE PLATE DETAILS ("P")

MAXIMUM ALLOWABLE SERVICE LOADS	
D.L.+L.L. (NO IMPACT)	
TYPE V	365 k

PROJECT NO. B-5103

NEW HANOVER COUNTY

STATION: 16+84.96 -L-

ASSEMBLED BY :	M. K. TOM	DATE :	7/31/14
CHECKED BY :	G. L. HAMILTON	DATE :	8/28/14
DESIGNED BY :	G. L. HAMILTON	DATE :	8/1/14
DRAWN BY : WJH 8/89	REV. 7/10/01		RWW/LES
CHECKED BY : CRK 8/89	REV. 5/1/06		TLA/GM
	REV. 10/1/11		MAA/GM

11/5/2014
R:\Structures\Submittals\2014_1101 Final Design and Tracings\Design Files\401_037_S01_B5103_BG_01.dgn
matt_tom

Prepared by
URS
URS Corporation - North Carolina
1600 Perimeter Park Drive, Suite 400
Morrisville, NC 27560
PHONE: (919) 461-1100 FAX: (919) 461-1415
NC LIC. # C-2243

11/5/2014
NORTH CAROLINA PROFESSIONAL SEAL 038447 ENGINEER ANDREW S. MILLER
DocuSigned by: Andrew S. Miller
05D820D940544ED...

STATE OF NORTH CAROLINA
DEPARTMENT OF TRANSPORTATION
RALEIGH

STANDARD

ELASTOMERIC BEARING DETAILS

PRESTRESSED CONCRETE GIRDER SUPERSTRUCTURE

REVISIONS								SHEET NO.
NO.	BY:	DATE:	NO.	BY:	DATE:			S-18
1			3					TOTAL SHEETS
2			4					48

STD. NO. EB4