DocuSign Envelope ID: FFACE48C-EF9B-4723-AFC0-B1A1551A9670

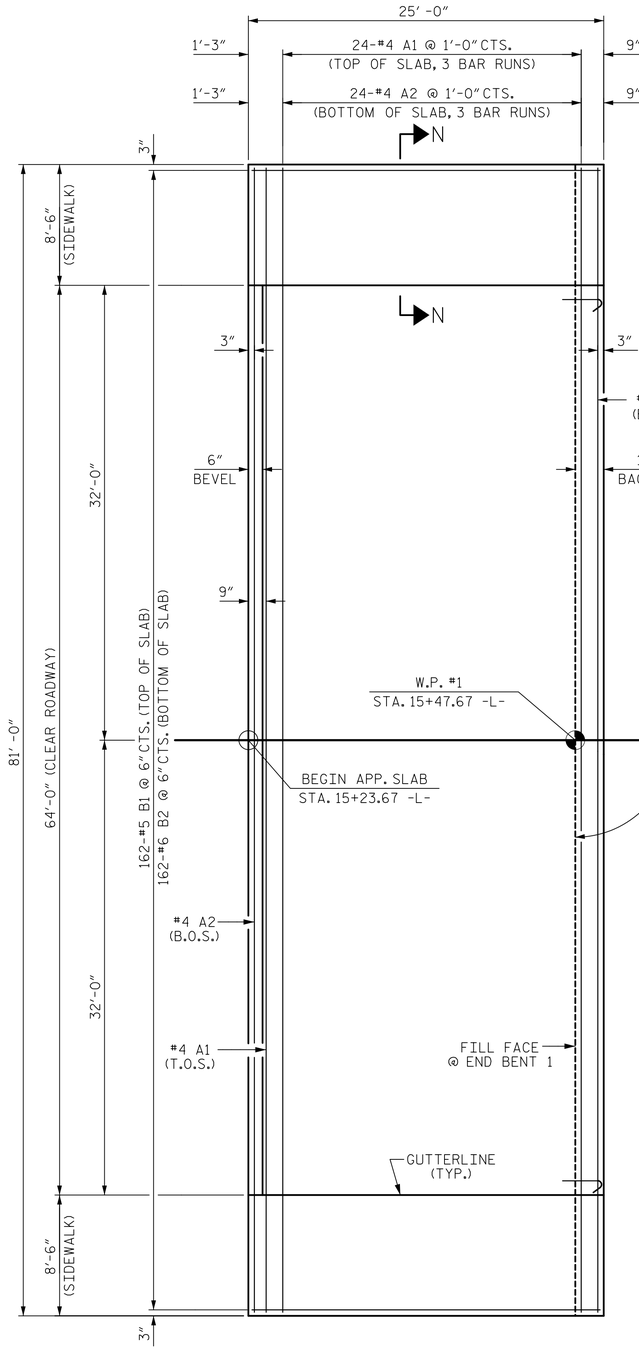

PLAN OF APPROACH SLAB

T.O.S. - DENOTES TOP OF SLAB

B.O.S. - DENOTES BOTTOM OF SLAB

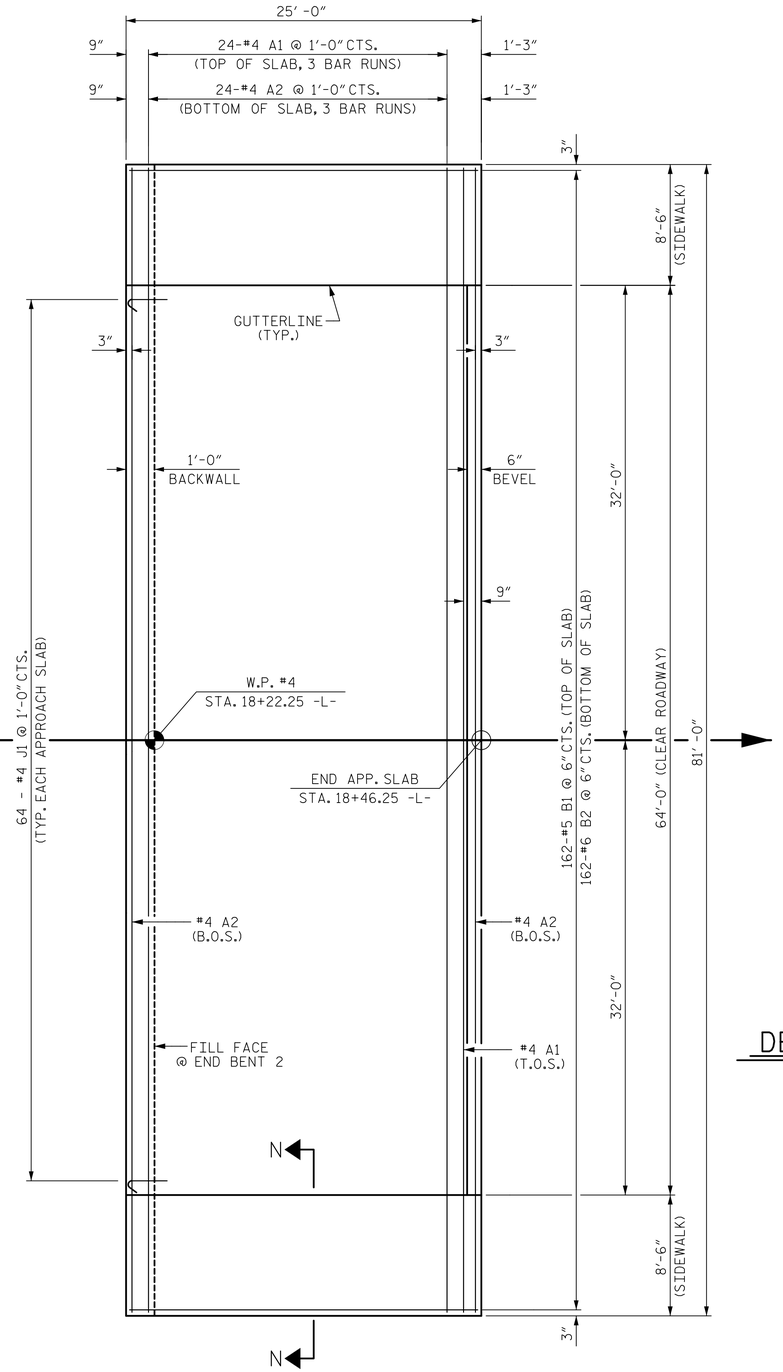

PLAN OF APPROACH SLAB

T.O.S. - DENOTES TOP OF SLAB

B.O.S. - DENOTES BOTTOM OF SLAB

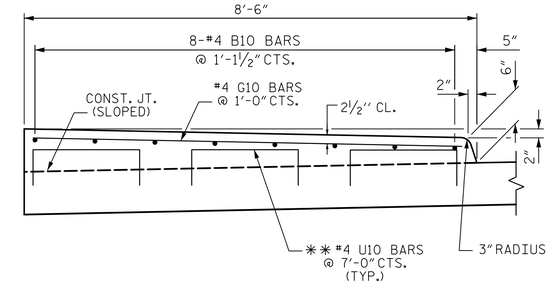

SECTION N-N

✱✱#4 U10 BARS MAY BE PUSHED INTO GREEN CONCRETE AFTER APPROACH SLAB HAS BEEN SCREEDED OFF.

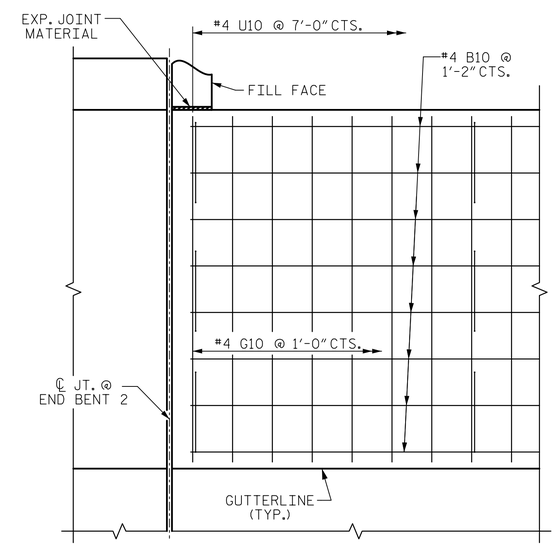

PLAN

LEFT SIDE END BENT 2 SHOWN, OTHER CORNERS ARE SIMILAR.

DETAILS OF SIDEWALK ON APPROACH SLAB

PROJECT NO. B-5103

NEW HANOVER COUNTY

STATION: 16+84.96 -L-

SHEET 1 OF 2

STATE OF NORTH CAROLINA
DEPARTMENT OF TRANSPORTATION
RALEIGH

BRIDGE APPROACH SLAB FOR FLEXIBLE PAVEMENT

Prepared by
URS
URS Corporation - North Carolina
1600 Perimeter Park Drive, Suite 400
Morrisville, NC 27560
PHONE: (919) 461-1100 FAX: (919) 461-1415
NC LIC.# C-2243

11/5/2014
NORTH CAROLINA PROFESSIONAL SEAL 038447 ENGINEER ANDREW S. MILLER
DocuSigned by: Andrew S. Miller
D5D820D9405446D...

REVISIONS							SHEET NO.
NO.	BY:	DATE:	NO.	BY:	DATE:		S-47
1			3				TOTAL SHEETS
2			4				48

DRAWN BY : R. L. WHITCHER DATE : 8/14/14
CHECKED BY : M. K. TOM DATE : 8/20/14
DESIGNED BY : R. L. WHITCHER DATE : 8/14/14

11/5/2014
R:\Structures\Submittals\2014_1101 Final Design and Tracings\Design Files\401_095_S01_B5103_AS_01.dgn
matt_tom