DocuSign Envelope ID: FFACE48C-EF9B-4723-AFC0-B1A1551A9670

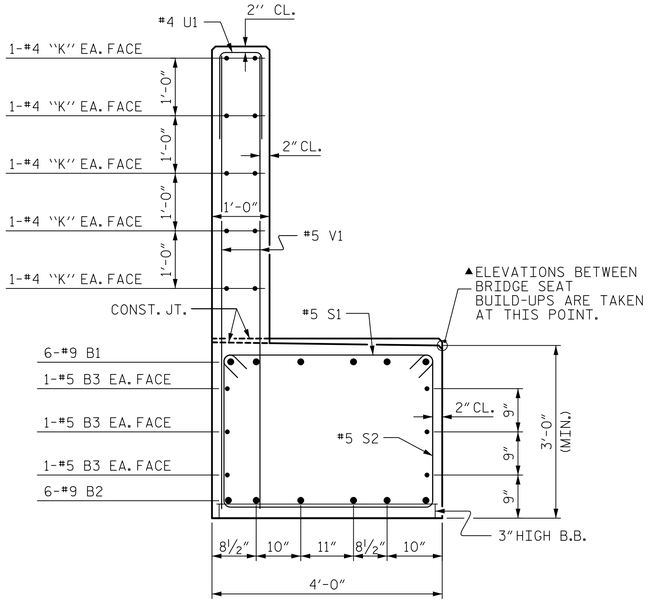

SECTION A-A

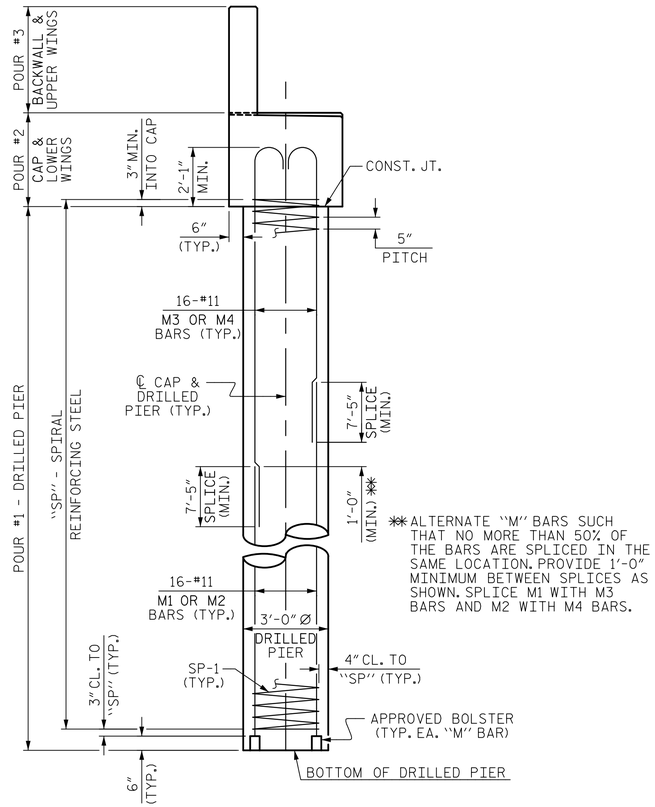

END ELEVATION

BAR TYPES

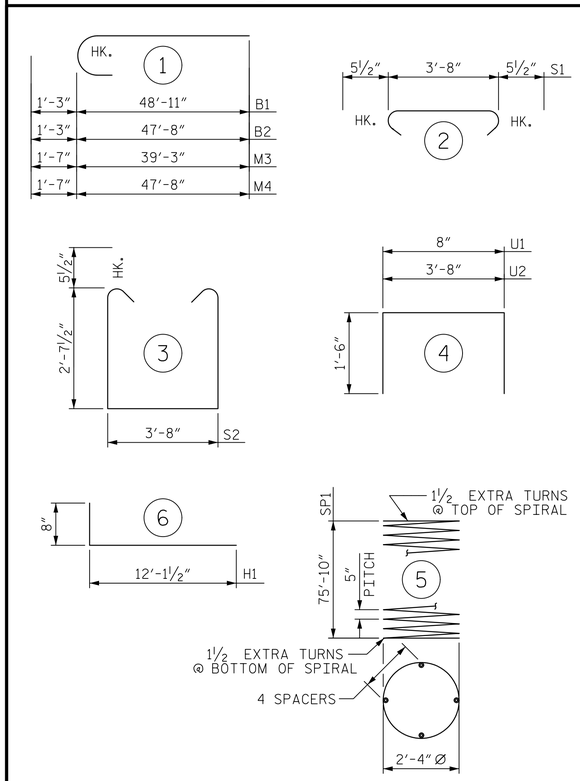

ALL BAR DIMENSIONS ARE OUT TO OUT

BILL OF MATERIAL

BAR	NO.	SIZE	TYPE	LENGTH	WEIGHT
B1	12	9	1	50'-2"	2047
B2	12	9	1	48'-11"	1996
B3	12	5	STR.	46'-0"	576
B4	12	4	STR.	19'-1"	153
B5	24	4	STR.	3'-2"	51
H1	76	5	6	12'-10"	1017
K1	40	4	STR.	24'-1"	644
K2	8	4	STR.	3'-9"	20
M1	56	11	STR.	49'-4"	14678
M2	56	11	STR.	40'-11"	12174
M3	56	11	1	40'-10"	12149
M4	56	11	1	49'-3"	14653
S1	108	5	2	4'-7"	516
S2	108	5	3	9'-10"	1108
U1	82	4	4	3'-8"	201
U2	36	4	4	6'-8"	160
V1	164	5	STR.	7'-2"	1226
V2	20	4	STR.	9'-4"	125
V3	24	4	STR.	8'-11"	143
V4	24	4	STR.	9'-1"	146
REINFORCING STEEL					63,783 LBS.
SP-1	7	*	5	1328'-1"	9,696
SPIRAL COLUMN REINFORCING STEEL					9,696 LBS.

*THE SP-1 SPIRAL REINFORCING STEEL SHALL BE W31 OR D-31 COLD DRAWN WIRE OR #5 PLAIN OR DEFORMED BAR

CLASS A CONCRETE BREAKDOWN	
POUR #2 (CAP & LOWER WINGS)	46.3 C.Y.
POUR #3 (BACKWALL & UPPER WINGS)	21.3 C.Y.
TOTAL CLASS A CONCRETE	67.6 C.Y.

DRILLED PIERS:	
DRILLED PIER CONCRETE	
POUR #1 (DRILLED PIERS)	139.9 C.Y.
3'-0" Ø DRILLED PIER	534.2 LIN. FT.
CSL TUBES	2178.8 LIN. FT.

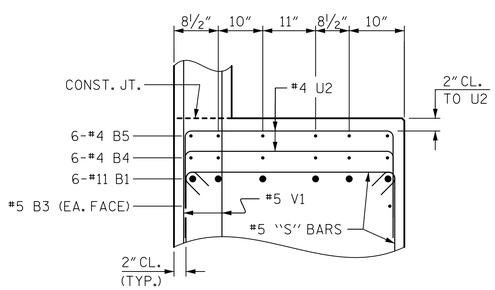

PARTIAL SECTION B-B

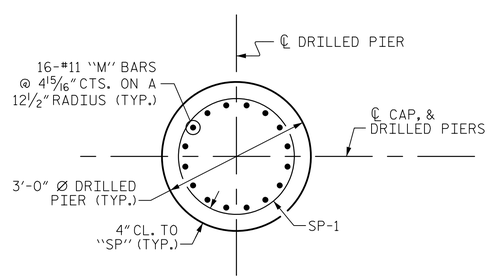

PLAN OF DRILLED PIERS

(REINFORCING STEEL IS TYPICAL FOR EACH DRILLED PIER)

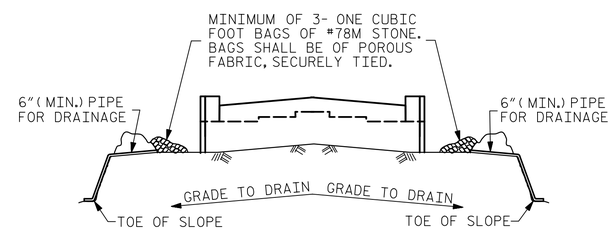

BAGGED STONE AND PIPE SHALL BE PLACED IMMEDIATELY AFTER COMPLETION OF END BENT EXCAVATION. PIPE MAY BE EITHER CONCRETE, CORRUGATED STEEL, CORRUGATED ALUMINUM ALLOY, OR CORRUGATED PLASTIC. PERFORATED PIPE WILL NOT BE ALLOWED.

BAGGED STONE SHALL REMAIN IN PLACE UNTIL THE ENGINEER DIRECTS THAT IT BE REMOVED. THE CONTRACTOR SHALL REMOVE AND DISPOSE OF SILT ACCUMULATIONS AT BAGGED STONE WHEN SO DIRECTED BY THE ENGINEER. BAGS SHALL BE REMOVED AND REPLACED WHENEVER THE ENGINEER DETERMINES THAT THEY HAVE DETERIORATED AND LOST THEIR EFFECTIVENESS.

NO SEPARATE PAYMENT WILL BE MADE FOR THIS WORK AND THE ENTIRE COST OF THIS WORK SHALL BE INCLUDED IN THE UNIT CONTRACT PRICE BID FOR THE SEVERAL PAY ITEMS.

TEMPORARY DRAINAGE AT END BENT

PROJECT NO. B-5103
NEW HANOVER COUNTY
STATION: 16+84.96 -L-

SHEET 3 OF 3

STATE OF NORTH CAROLINA
DEPARTMENT OF TRANSPORTATION
RALEIGH

SUBSTRUCTURE

END BENT 2

Prepared by
URS
URS Corporation - North Carolina
1600 Perimeter Park Drive, Suite 400
Morrisville, NC 27560
PHONE: (919) 461-1100 FAX: (919) 461-1415
NC LIC.# C-2243

11/5/2014
NORTH CAROLINA PROFESSIONAL SEAL 038447 ENGINEER ANDREW S. MILLER
DocuSigned by: Andrew S. Miller
D5B820D9405446D...

REVISIONS						SHEET NO.
NO.	BY:	DATE:	NO.	BY:	DATE:	S-45
1			3			TOTAL SHEETS
2			4			48

DRAWN BY : R. L. WHITCHER DATE : 8/13/14
CHECKED BY : M. K. TOM DATE : 9/4/14
DESIGNED BY : M. K. TOM DATE : 8/1/14

11/5/2014
R:\Structures\Submittals\2014_1101 FinalDesign and Tracings\Design Files\401_091_S01_B5103_EB2_03.dgn
matt_tom