DocuSign Envelope ID: FFACE48C-EF9B-4723-AFC0-B1A1551A9670

NOTE A:

COORDINATE WITH CITY OF WILMINGTON FOR INSTALLATION OF ANCHOR BOLTS. ANCHOR BOLT SIZE & LOCATION ARE TO BE AS SPECIFIED BY LIGHT POLE MANUFACTURER.

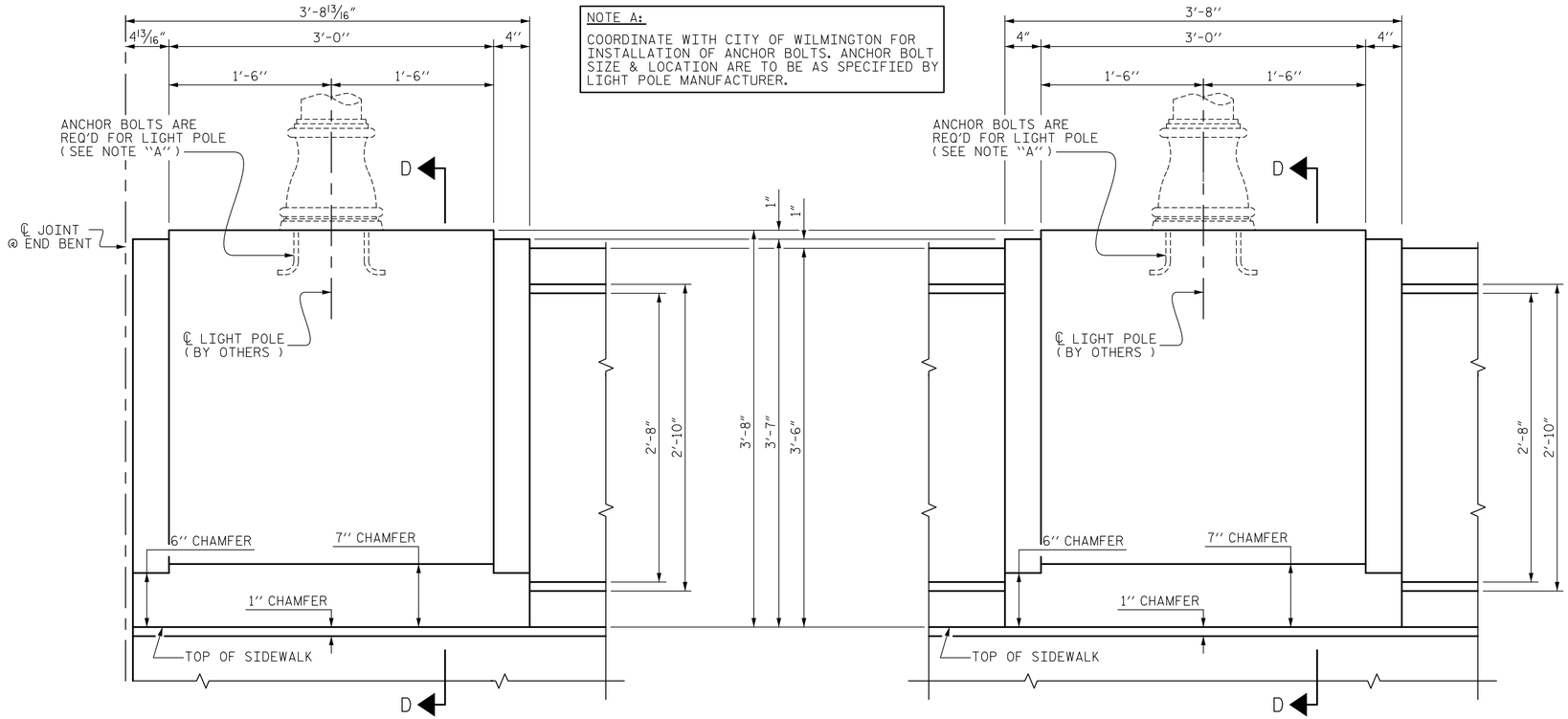

LIGHTING PILASTER @ END BENT

LIGHTING PILASTER

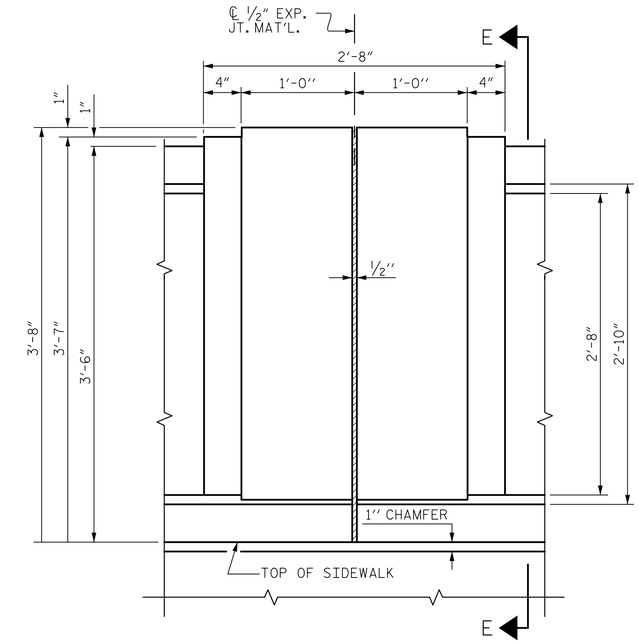

JOINT IN PILASTER

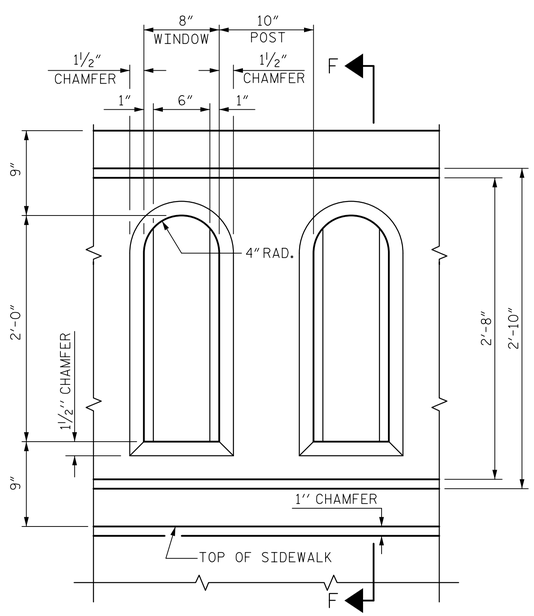

WINDOW DETAIL

NOTE : WINDOW DETAILS ARE TYPICAL FOR EACH FACE.

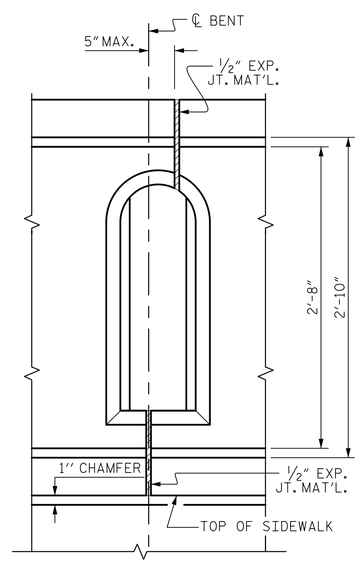

JOINT IN WINDOW @ CONTINUOUS BENTS 1 AND 2

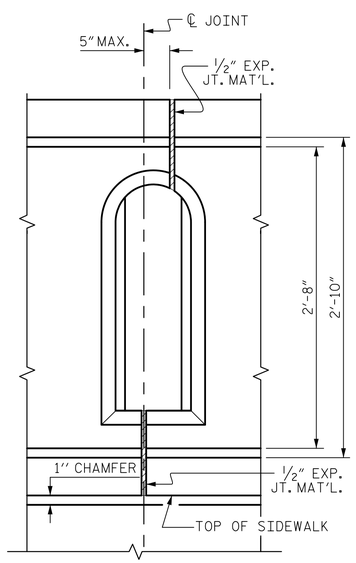

JOINT IN WINDOW

EXTERIOR RAIL & PILASTER ELEVATIONS

DRAWN BY :	M. K. TOM	DATE :	7/23/14
CHECKED BY :	K. H. COMPTON	DATE :	8/22/14
DESIGNED BY :	M. K. TOM	DATE :	7/23/14

11/5/2014
R:\Structures\Submittals\2014_1101 FinalDesign and Tracings\Design Files\401_047_S01_B5103_BR_02.dgn
matt_tom

Prepared by
URS
URS Corporation - North Carolina
1600 Perimeter Park Drive, Suite 400
Morrisville, NC 27560
PHONE: (919) 461-1100 FAX: (919) 461-1415
NC LIC. # C-2243

11/5/2014
NORTH CAROLINA PROFESSIONAL SEAL 038447 ENGINEER ANDREW S. MILLER
DocuSigned by: Andrew S. Miller
D5D820D9405446D...

PROJECT NO. B-5103
NEW HANOVER COUNTY
STATION: 16+84.96 -L-

SHEET 2 OF 7

STATE OF NORTH CAROLINA
DEPARTMENT OF TRANSPORTATION
RALEIGH

SUPERSTRUCTURE

CLASSIC CONCRETE BRIDGE RAIL WITH SIDEWALK

REVISIONS							SHEET NO.
NO.	BY:	DATE:	NO.	BY:	DATE:		S-23
1			3				TOTAL SHEETS
2			4				48