DocuSign Envelope ID: FFACE48C-EF9B-4723-AFC0-B1A1551A9670

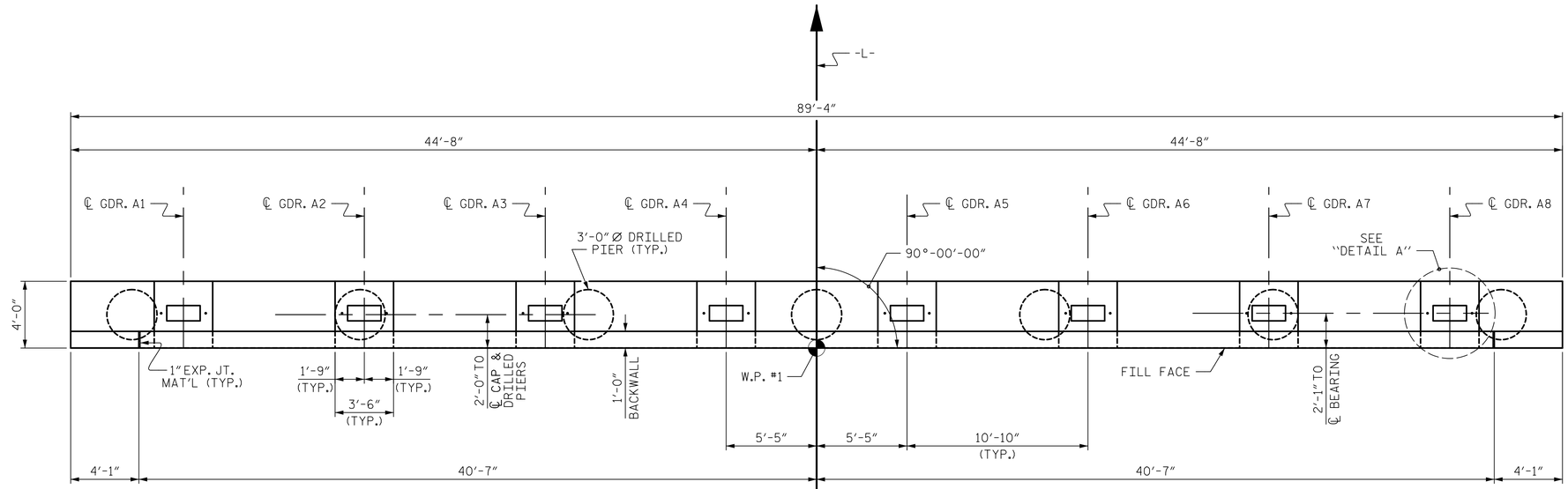

PLAN

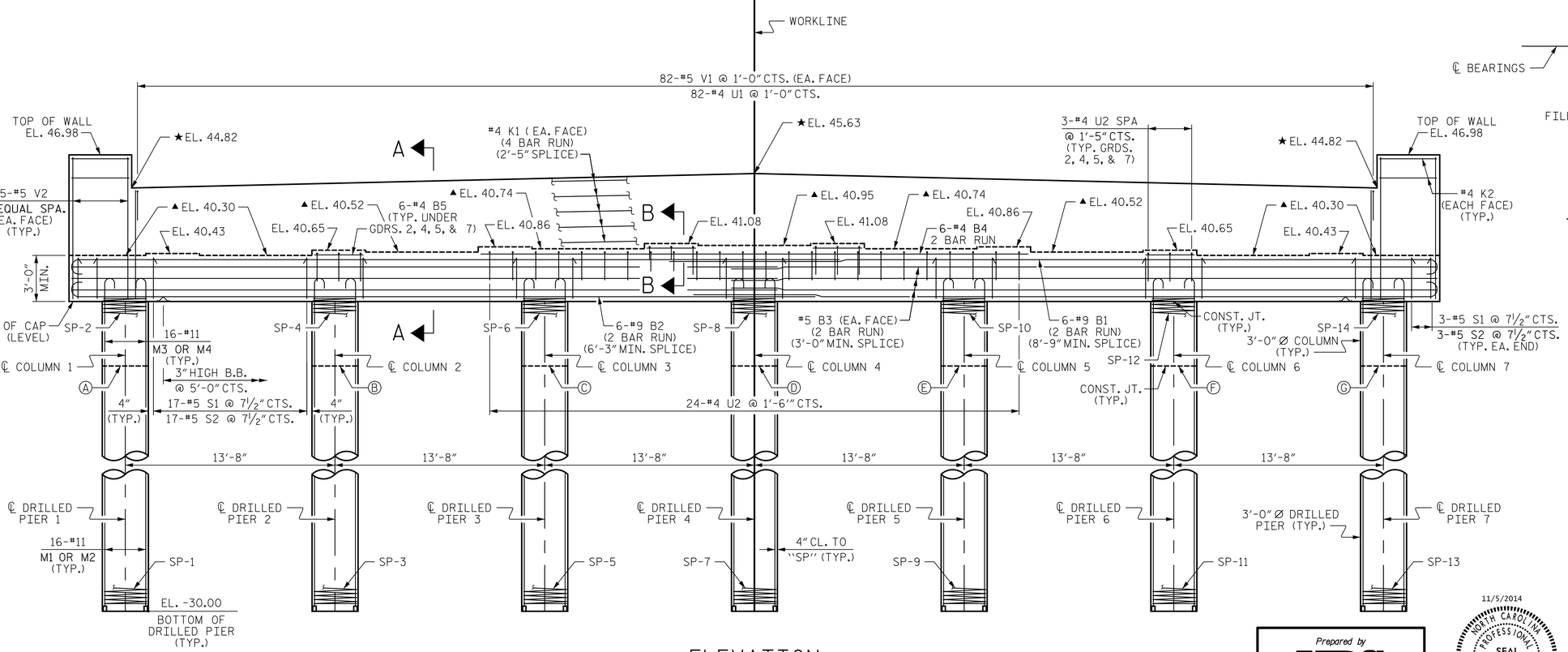

ELEVATION

NOTES

▲ FOR LOCATION OF ELEVATIONS BETWEEN BUILDUPS, SEE SECTION A-A ON SHEET 2 OF 2.

★ THIS ELEVATION TAKEN ON FILL FACE OF BACKWALL.

STIRRUPS AND "U" BARS IN CAP MAY BE SHIFTED AS NECESSARY TO CLEAR ANCHOR BOLTS.

HOOKS ON "M" BARS MAY BE TURNED AS NECASSARY TO FACILITATE CAP REINFORCEMENT PLACEMENT.

ALL STEEL IN THE DRILLED PIERS IS INCLUDED IN THE PAY ITEMS FOR "REINFORCING STEEL" AND "SPIRAL COLUMN REINFORCING STEEL"

THE CONTRACTOR'S ATTENTION IS CALLED TO THE FACT THAT THE LONGITUDINAL REINFORCEMENT FOR THE DRILLED PIERS IS DETAILED WITH 3 FEET OF EXTRA LENGTH.

THE TOP SURFACE AREAS OF THE END BENT CAPS SHALL BE CURED IN ACCORDANCE WITH THE STANDARD SPECIFICATIONS, EXCEPT THE MEMBRANE CURING COMPOUND METHOD SHALL NOT BE USED.

BACKWALL SHALL BE PLACED BEFORE APPLYING THE EPOXY PROTECTIVE COATING.

AT THE CONTRACTORS OPTION EACH DRILLED PIER AND COLUMN MAY BE CAST IN ONE POUR.

THE INTERFACE BETWEEN THE SOLDIER PILE RETAINING WALL AND THE END BENT CAP SHALL BE SEALED WITH AN APPROVED JOINT SEALANT.

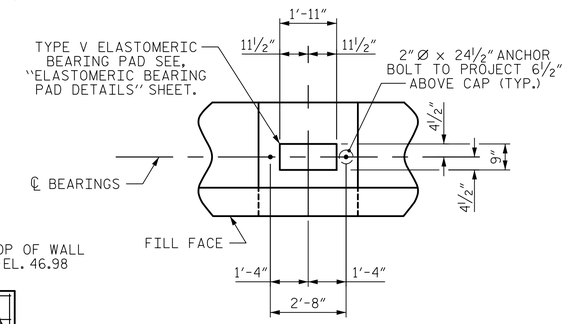

DETAIL "A"

(TYP. EA. BRG.)

TOP OF DRILLED PIER ELEVATIONS	
A	26.30
B	27.10
C	28.00
D	28.80
E	29.70
F	30.70
G	31.40

PROJECT NO. B-5103

NEW HANOVER COUNTY

STATION: 16+84.96 -L-

SHEET 1 OF 2

STATE OF NORTH CAROLINA
DEPARTMENT OF TRANSPORTATION
RALEIGH

SUBSTRUCTURE

END BENT 1

Prepared by
URS
URS Corporation - North Carolina
1600 Perimeter Park Drive, Suite 400
Morrisville, NC 27560
PHONE: 919) 461-1100 FAX: 919) 461-1415
NC LIC.# C-2243

11/5/2014
NORTH CAROLINA PROFESSIONAL SEAL 038447 ENGINEER ANDREW S. MILLER
DocuSigned by: Andrew S. Miller
D5DB20D9405446D...

REVISIONS						SHEET NO.
NO.	BY:	DATE:	NO.	BY:	DATE:	S-35
1			3			TOTAL SHEETS
2			4			48

DRAWN BY : M. K. TOM DATE : 8/1/14
CHECKED BY : R. L. WHITCHER DATE : 9/4/14
DESIGNED BY : M. K. TOM DATE : 8/1/14

11/5/2014
R:\Structures\Submittals\2014_1101 FinalDesign and Tracings\Design Files\401_071_S01_B5103_EB1_01.dgn
matt_tom