DocuSign Envelope ID: FFACE48C-EF9B-4723-AFC0-B1A1551A9670

NOTE A:

COORDINATE WITH CITY OF WILMINGTON FOR INSTALLATION OF ANCHOR BOLTS. ANCHOR BOLT SIZE & LOCATION ARE TO BE AS SPECIFIED BY LIGHT POLE MANUFACTURER.

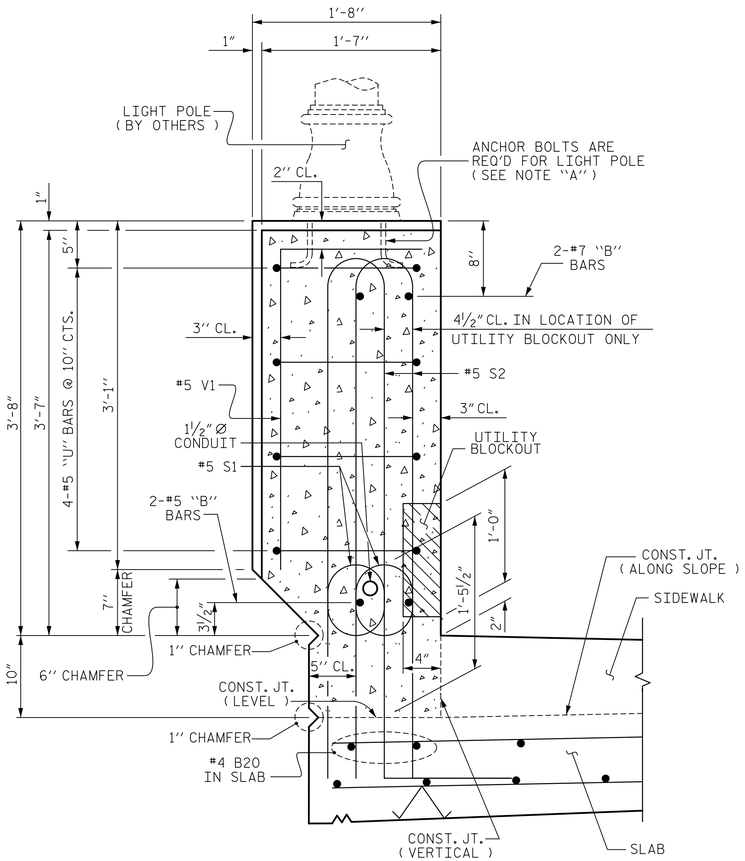

SECTION D-D

(SHOWING LIGHTING PILASTER)
(FOR LOCATION OF CONDUIT, SEE "ELECTRICAL CONDUIT SYSTEM" SHEET)

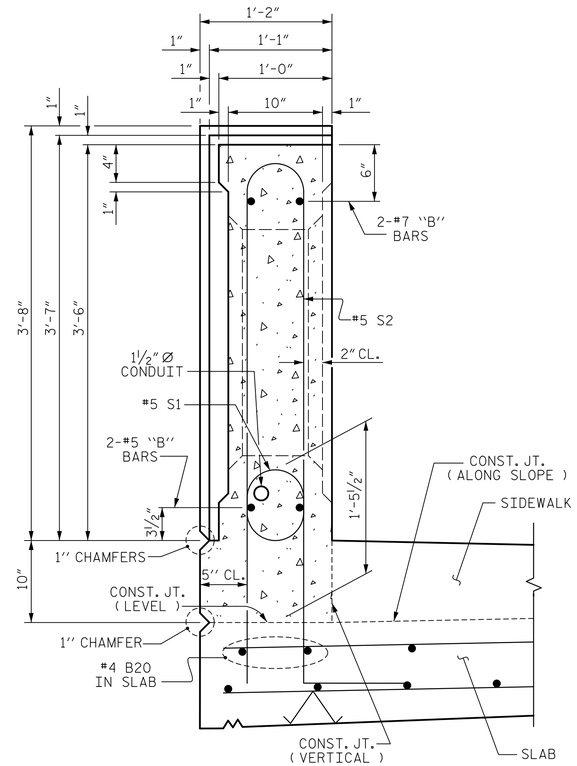

SECTION E-E

(SHOWING JOINT IN PILASTER)

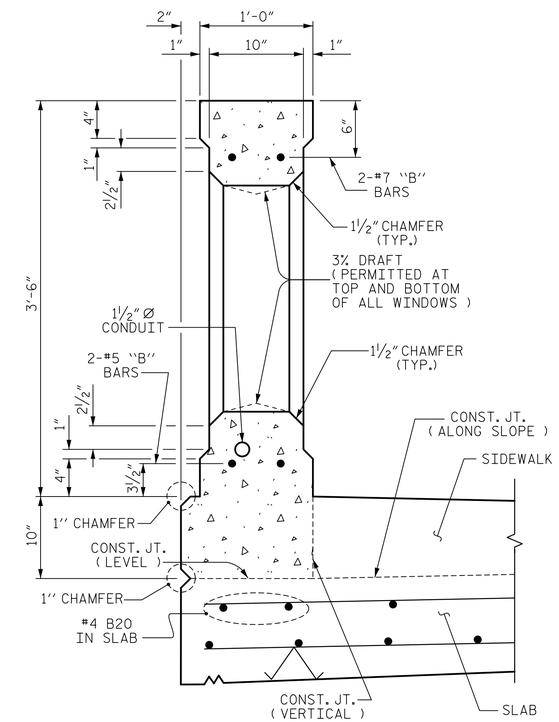

SECTION F-F

(SHOWING WINDOW OF RAIL)

NOTE :
FOR LOCATION OF SECTIONS,
SEE SHEET 2 OF 7.

PROJECT NO. B-5103
NEW HANOVER COUNTY
STATION: 16+84.96 -L-

SHEET 3 OF 7

STATE OF NORTH CAROLINA
DEPARTMENT OF TRANSPORTATION
RALEIGH

SUPERSTRUCTURE

CLASSIC CONCRETE BRIDGE RAIL WITH SIDEWALK

Prepared by
URS
URS Corporation - North Carolina
1600 Perimeter Park Drive, Suite 400
Morrisville, NC 27560
PHONE: 919) 461-1100 FAX: 919) 461-1415
NC LIC.# C-2243

11/5/2014
NORTH CAROLINA PROFESSIONAL SEAL 038447 ENGINEER ANDREW S. MILLER
DocuSigned by: Andrew S. Miller
D5D820D9405446D...

REVISIONS						SHEET NO.
NO.	BY:	DATE:	NO.	BY:	DATE:	S-24
1			3			TOTAL SHEETS
2			4			48

DRAWN BY : M. K. TOM DATE : 7/23/14
CHECKED BY : K. H. COMPTON DATE : 8/22/14
DESIGNED BY : M. K. TOM DATE : 7/23/14

11/5/2014
R:\Structures\Submittals\2014_1101 FinalDesign and Tracings\Design Files\401_049_S01_B5103_BR_03.dgn
matt_tom