DocuSign Envelope ID: FFACE48C-EF9B-4723-AFC0-B1A1551A9670

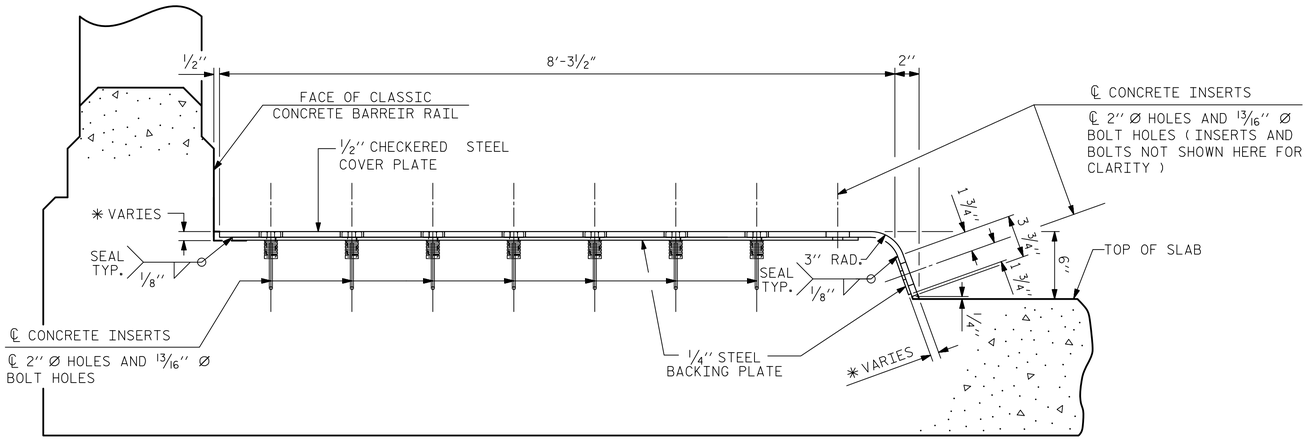

END VIEW
(NORMAL TO SIDEWALK)

✳ CONCRETE RECESS DIMENSIONS:

13/16'' FOR THE SIDE OF THE JOINT HAVING THE 1/2'' COVER PLATE WITH A 1/4'' BACKING PLATE.

9/16'' FOR THE SIDE OF THE JOINT HAVING ONLY THE 1/2'' COVER PLATE.

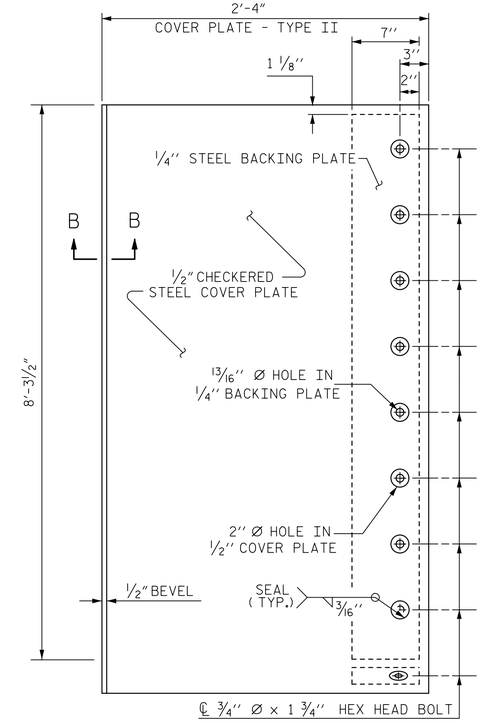

TYPE II - PLAN VIEW

NOTES:

THE STEEL PLATES CONFORM TO AASHTO M270 GRADE 36 OR APPROVED EQUAL. AFTER FABRICATION, THE PLATE SHALL BE COMMERCIALLY BLAST CLEANED AND COATED WITH A MINIMUM THICKNESS OF 4 MILS (DRY) OF ZINC RICH PAINT, GALVANIZED OR METALLIZED TO A MINIMUM THICKNESS OF 6 MILS IN ACCORDANCE WITH THE STANDARD SPECIFICATIONS. FOR THERMAL SPRAYED COATINGS (METALLIZATION), SEE SPECIAL PROVISIONS.

THE 3/4" DIAMETER HEX HEAD BOLTS SHALL CONFORM TO ASTM F593 ALLOY 304 STAINLESS STEEL.

THE 3/4" CONCRETE INSERTS SHALL BE CLOSED-END FERRULES WITH LOOPED WIRE STRUTS ATTACHED TO THEM. THE INSERTS SHALL CONFORM TO AASHTO M169, GRADE 12L14 AND SHALL HAVE A TENSILE WORKING LOAD CAPACITY OF 3000 LBS.

NO SEPARATE PAYMENT WILL BE MADE FOR FURNISHING AND INSTALLING THE COVER PLATES. THE ENTIRE COST OF THIS WORK SHALL BE INCLUDED IN THE LUMP SUM PRICE FOR EXPANSION JOINT SEALS.

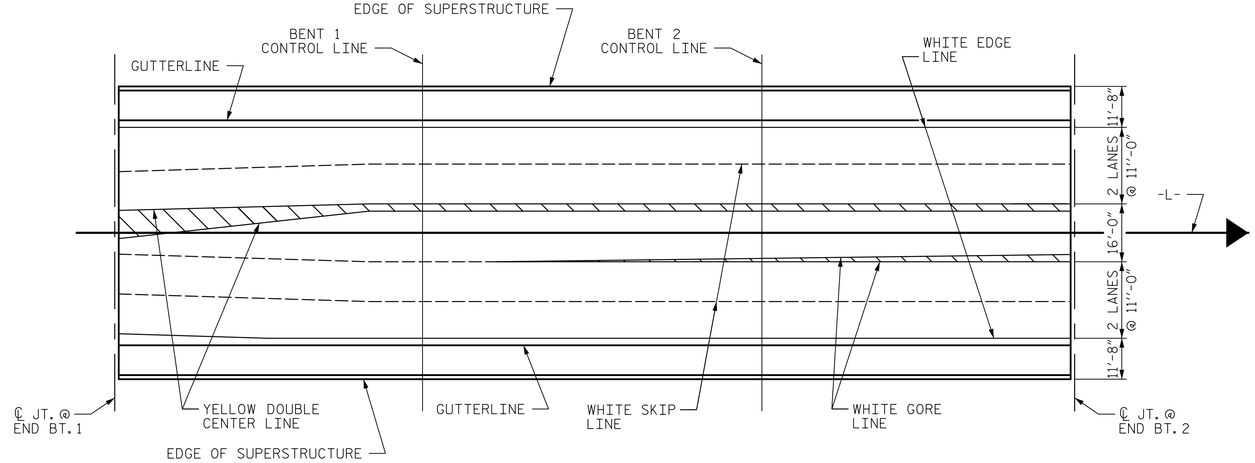

PAVEMENT MARKING ALIGNMENT

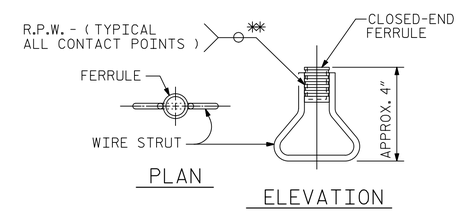

CONCRETE INSERT

✳✳ EACH WELDED ATTACHMENT OF WIRE TO FERRULE SHALL DEVELOP THE TENSILE STRENGTH OF THE WIRE.

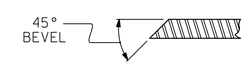

SECTION B - B

COVER PLATE DETAILS

PROJECT NO. B-5103
NEW HANOVER COUNTY
STATION: 16+84.96 -L-

SHEET 3 OF 3

STATE OF NORTH CAROLINA
DEPARTMENT OF TRANSPORTATION
RALEIGH

STANDARD

EXPANSION JOINT SEAL DETAILS FOR SIDEWALK

REVISIONS						SHEET NO.
NO.	BY:	DATE:	NO.	BY:	DATE:	S-32
1			3			TOTAL SHEETS
2			4			48

STD. NO. EJS4

Prepared by
URS
URS Corporation - North Carolina
1600 Perimeter Park Drive, Suite 400
Morrisville, NC 27560
PHONE: (919) 461-1100 FAX: (919) 461-1415
NC LIC. # C-2243

11/5/2014
NORTH CAROLINA PROFESSIONAL SEAL 038447 ENGINEER ANDREW S. MILLER
DocuSigned by: Andrew S. Miller
D5D820D9405446D...

ASSEMBLED BY :	M. K. TOM	DATE :	8/6/14
CHECKED BY :	G. L. HAMILTON	DATE :	8/22/14
DESIGNED BY :	M. K. TOM	DATE :	8/6/14
DRAWN BY : REK 10/87	REV. 10/17/00	RWW/LES	
CHECKED BY : CRK 1/88	REV. 5/1/06	TLA/GM	
	REV. 10/1/11	MAA/GM	

11/5/2014
R:\Structures\Submittals\2014_1101 Final Design and Tracings\Design Files\401_065_S01_B5103_JS_03.dgn
matt_tom