DocuSign Envelope ID: FFACE48C-EF9B-4723-AFC0-B1A1551A9670

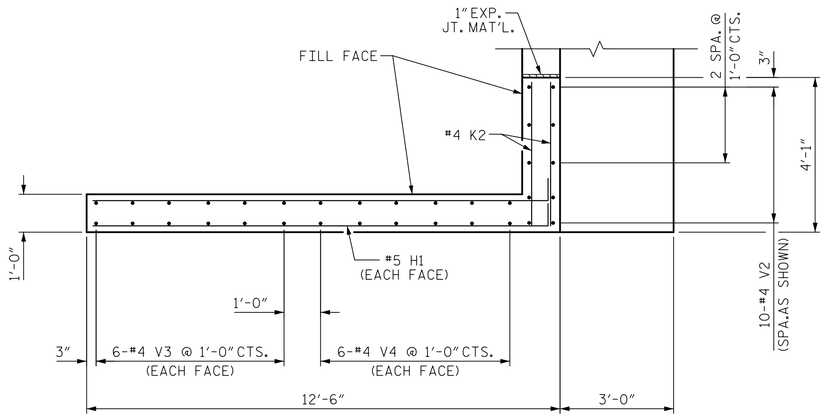

PLAN OF WING (W1)

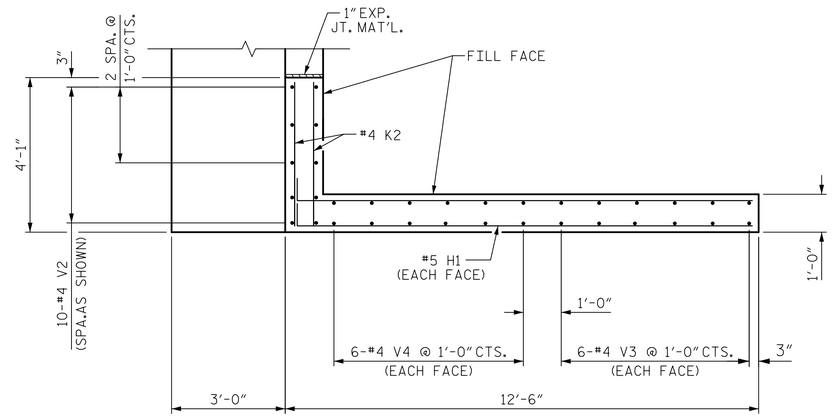

PLAN OF WING (W2)

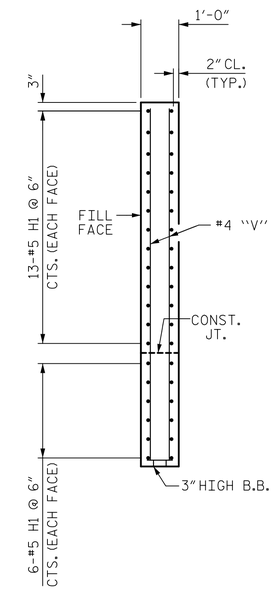

SECTION X-X

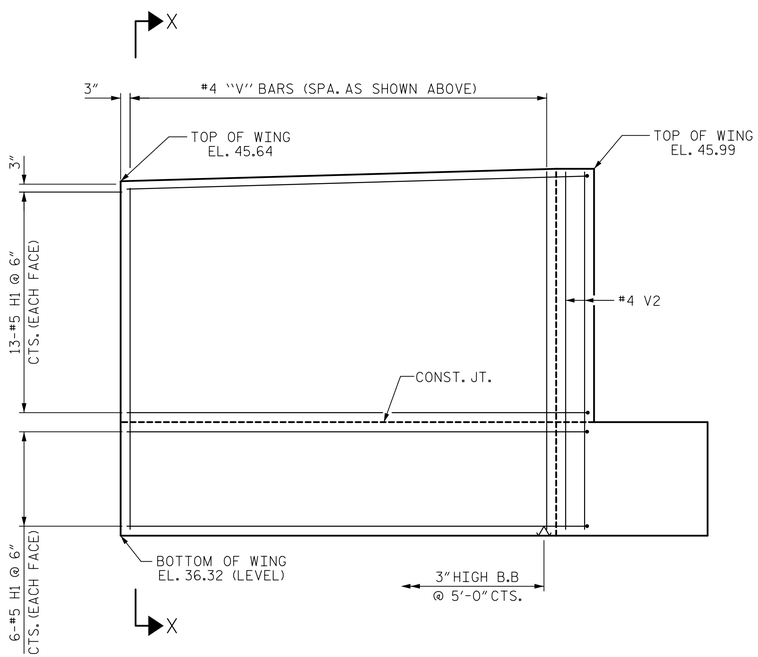

ELEVATION OF WING (W1)

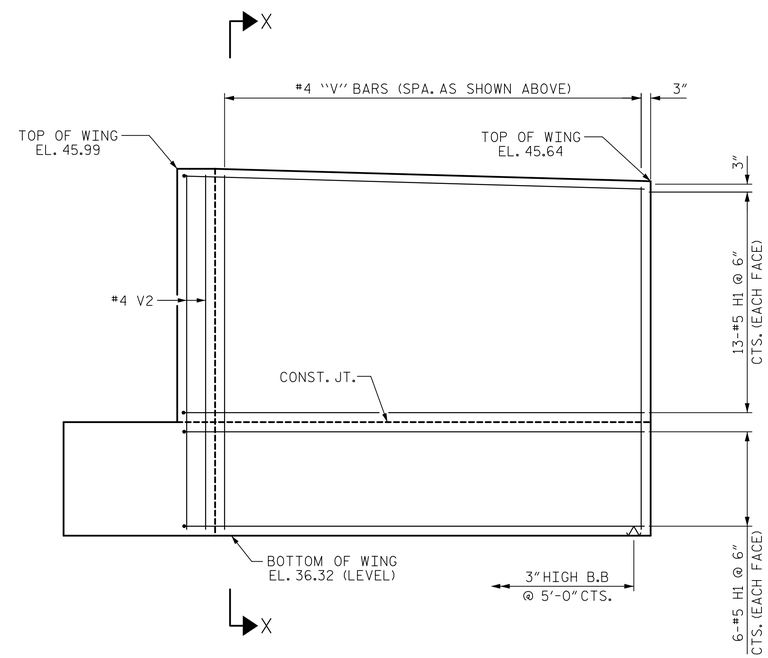

ELEVATION OF WING (W2)

PROJECT NO. B-5103
NEW HANOVER COUNTY
STATION: 16+84.96 -L-

SHEET 2 OF 3

STATE OF NORTH CAROLINA
DEPARTMENT OF TRANSPORTATION
RALEIGH

SUBSTRUCTURE

END BENT 2

Prepared by
URS
URS Corporation – North Carolina
1600 Perimeter Park Drive, Suite 400
Morrisville, NC 27560
PHONE: (919) 461-1100 FAX: (919) 461-1415
NC LIC. # C-2243

11/5/2014
NORTH CAROLINA PROFESSIONAL SEAL 038447 ENGINEER ANDREW S. MILLER
DocuSigned by: Andrew S. Miller
D5D820D9405446D...

REVISIONS						SHEET NO.
NO.	BY:	DATE:	NO.	BY:	DATE:	S-44
1			3			TOTAL SHEETS
2			4			48

DRAWN BY : R. L. WHITCHER DATE : 8/13/14
CHECKED BY : M. K. TOM DATE : 9/4/14
DESIGNED BY : R. L. WHITCHER DATE : 8/13/14

11/5/2014
R:\Structures\Submittals\2014_1101 FinalDesign and Tracings\Design Files\401_089_S01_B5103_EB2_02.dgn
matt_tom