DocuSign Envelope ID: FFACE48C-EF9B-4723-AFC0-B1A1551A9670

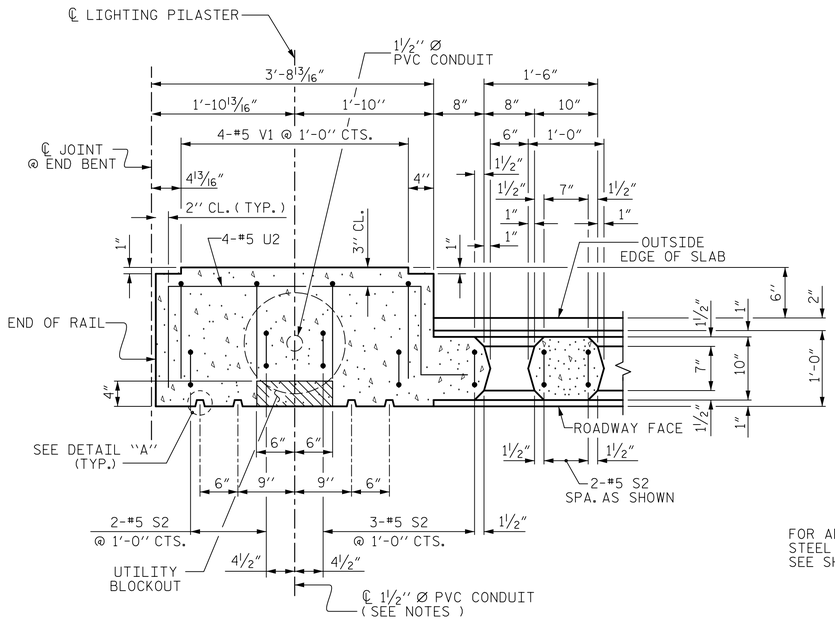

SECTION A-A

SHOWING JOINT IN PILASTER @ END BENT

FOR ADDITIONAL REINFORCING STEEL IN LIGHTING PILASTER, SEE SHEET 3 & 4 OF 7 (TYP.)

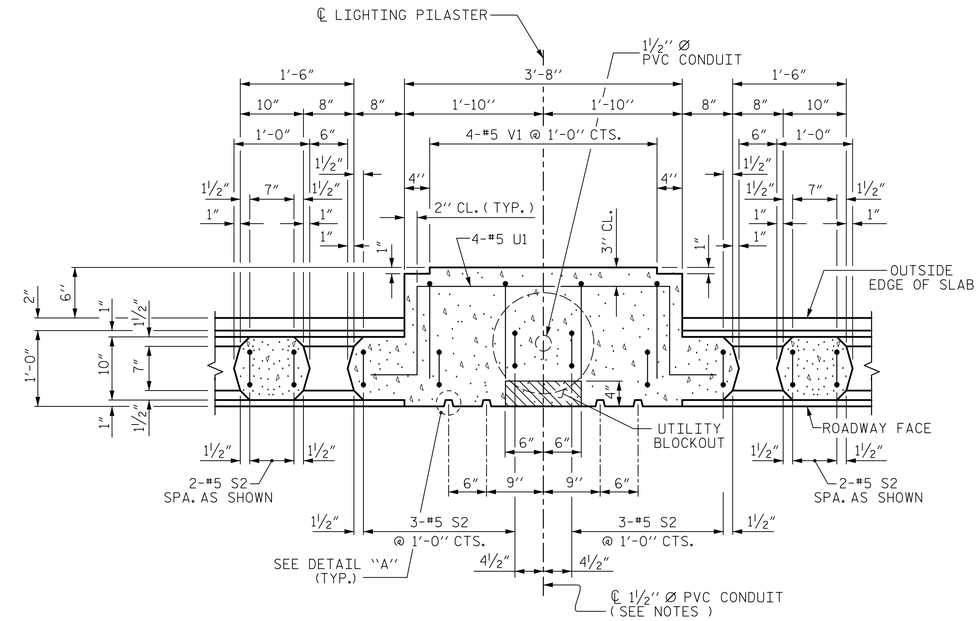

SECTION B-B

SHOWING LIGHTING PILASTER

NOTES

FOR CONDUIT AND JUNCTION BOX DETAILS, SEE ''ELECTRICAL CONDUIT SYSTEM'' PLAN SHEET.

ANCHOR BOLTS FOR LIGHT POLE ARE REQUIRED IN LIGHTING PILASTER. COORDINATE WITH CITY OF WILMINGTON TO INSTALL ANCHOR BOLTS ACCORDING TO POLE MANUFACTURER SPECIFICATIONS.

FOR LOCATION OF SECTIONS, SEE SHEET 1 OF 7.

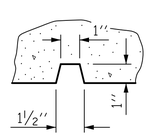

DETAIL ''A''

TYPICAL FLUTE

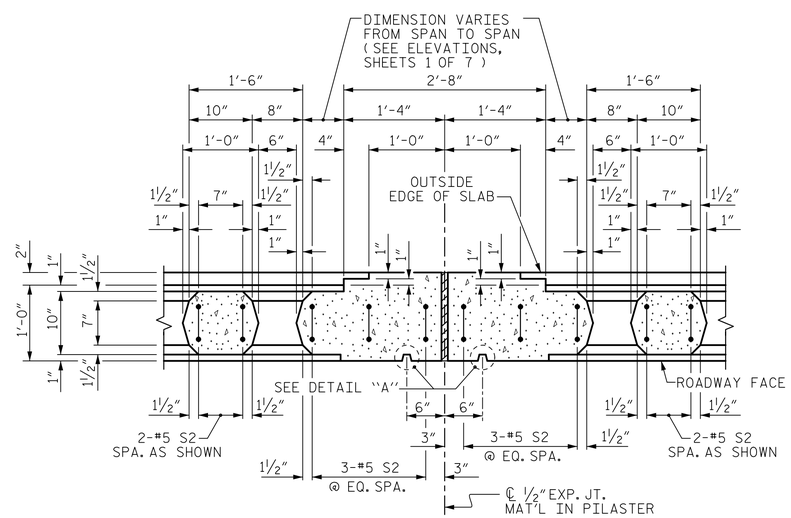

SECTION C-C

SHOWING JOINT IN PILASTER

PROJECT NO. B-5103

NEW HANOVER COUNTY

STATION: 16+84.96 -L-

SHEET 4 OF 7

STATE OF NORTH CAROLINA
DEPARTMENT OF TRANSPORTATION
RALEIGH

SUPERSTRUCTURE

CLASSIC CONCRETE BRIDGE RAIL WITH SIDEWALK

REVISIONS						SHEET NO.
NO.	BY:	DATE:	NO.	BY:	DATE:	S-25
1			3			TOTAL SHEETS
2			4			48

Prepared by
URS
URS Corporation - North Carolina
1600 Perimeter Park Drive, Suite 400
Morrisville, NC 27560
PHONE: (919) 461-1100 FAX: (919) 461-1415
NC LIC. # C-2243

11/5/2014
NORTH CAROLINA PROFESSIONAL SEAL 038447 ENGINEER ANDREW S. MILLER
DocuSigned by: Andrew S. Miller
D5DB20D9405446D...

DRAWN BY :	M. K. TOM	DATE :	7/23/14
CHECKED BY :	K. H. COMPTON	DATE :	8/22/14
DESIGNED BY :	M. K. TOM	DATE :	7/23/14

11/5/2014
R:\Structures\Submittals\2014_1101 FinalDesign and Tracings\Design Files\401_051_S01_B5103_BR_04.dgn
matt_tom