DocuSign Envelope ID: FFACE48C-EF9B-4723-AFC0-B1A1551A9670

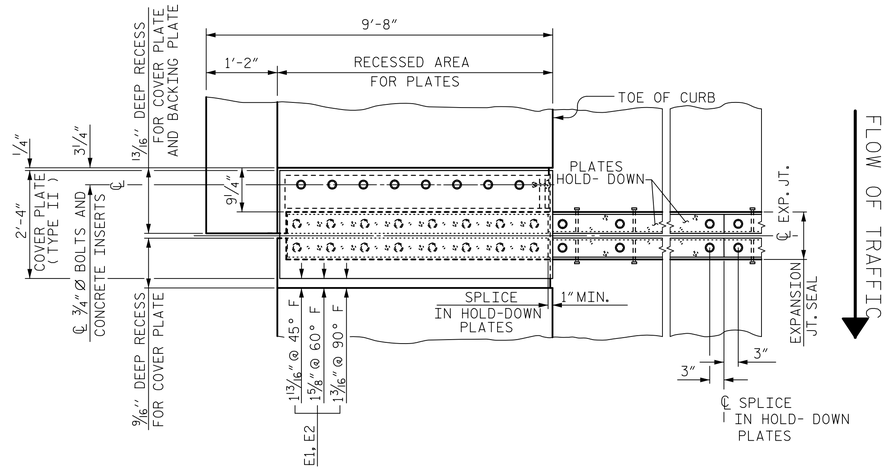

PLAN OF EXPANSION JOINT SEAL - LEFT SIDE

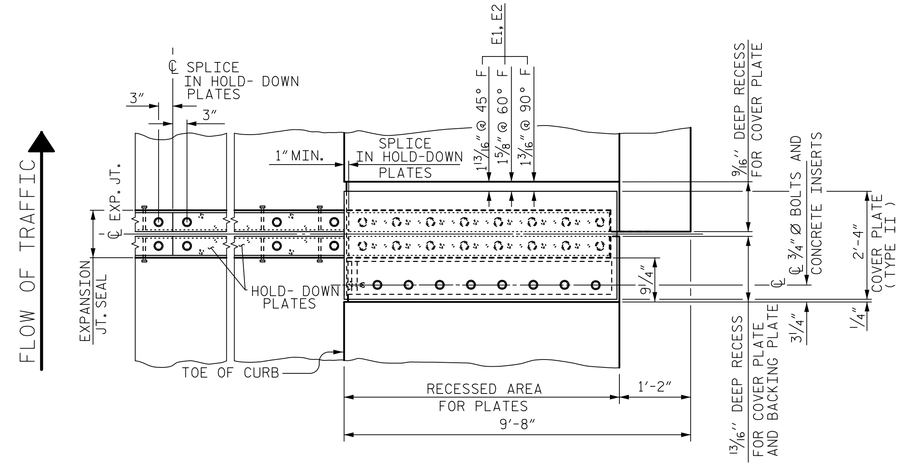

PLAN OF EXPANSION JOINT SEAL - RIGHT SIDE

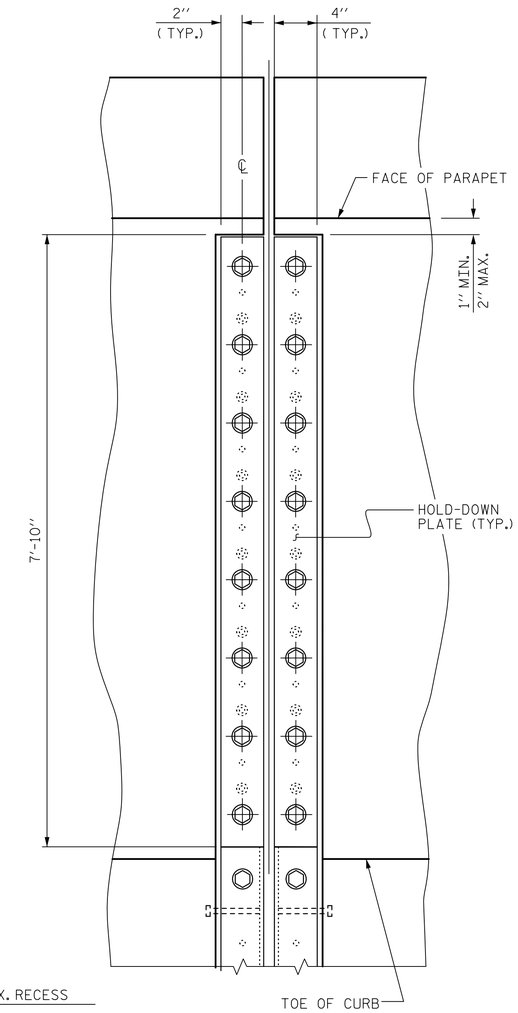

SECTION A - A

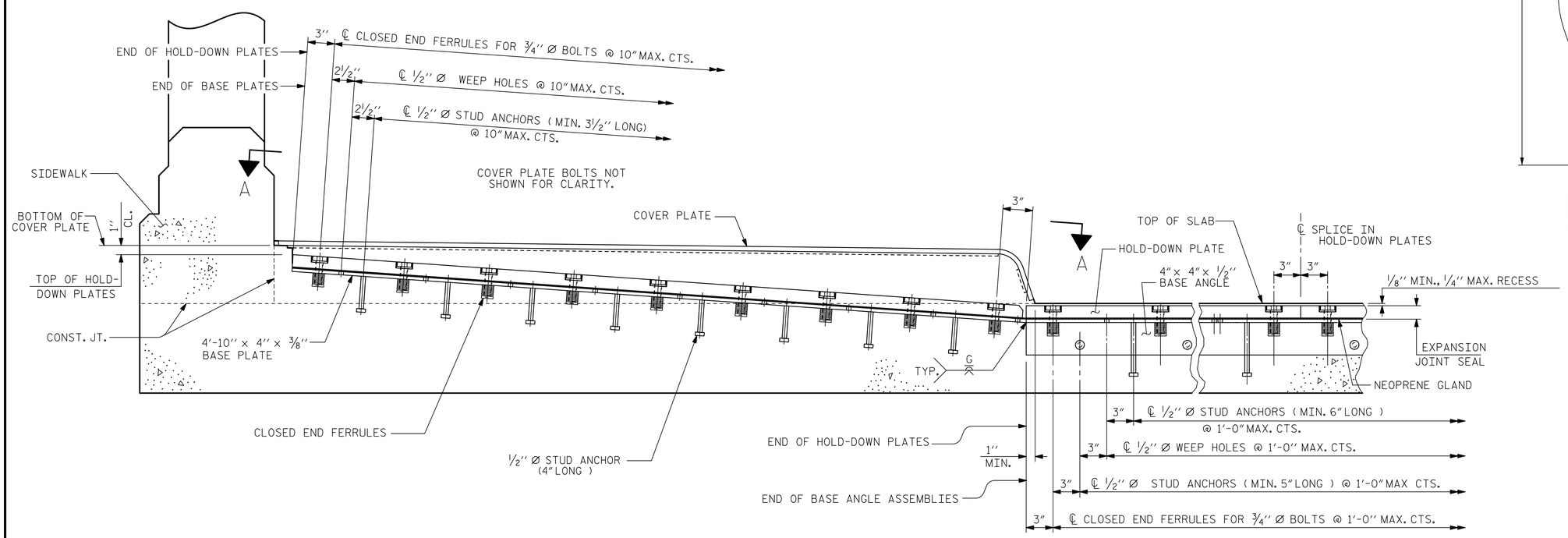

SECTION THRU SIDEWALK NORMAL TO JOINT

PROJECT NO. B-5103
NEW HANOVER COUNTY
STATION: 16+84.96 -L-

SHEET 2 OF 3

STATE OF NORTH CAROLINA
DEPARTMENT OF TRANSPORTATION
RALEIGH

STANDARD

EXPANSION JOINT SEAL DETAILS FOR SIDEWALK

ASSEMBLED BY : M. K. TOM	DATE : 8/6/14		
CHECKED BY : G. L. HAMILTON	DATE : 8/22/14		
DESIGNED BY : M. K. TOM	DATE : 8/6/14		
DRAWN BY : REK 10/87	REV. 2/6/97	EEM/RGW	
CHECKED BY : CRK 1/88	REV. 5/1/06	TLA/GM	
	REV. 10/1/11	MAA/GM	

Prepared by
URS
URS Corporation – North Carolina
1600 Perimeter Park Drive, Suite 400
Morrisville, NC 27560
PHONE: (919) 461-1100 FAX: (919) 461-1415
NC LIC. # C-2243

11/5/2014
NORTH CAROLINA PROFESSIONAL SEAL 038447 ENGINEER ANDREW S. MILLER
DocuSigned by: Andrew S. Miller
D5D820D9405446D...

REVISIONS							SHEET NO.
NO.	BY:	DATE:	NO.	BY:	DATE:		S-31
1			3				TOTAL SHEETS
2			4				48

STD. NO. EJS3

11/5/2014
R:\Structures\Submittals\2014_1101 Final Design and Tracings\Design Files\401_063_S01_B5103_JS_02.dgn
matt_tom