DocuSign Envelope ID: FFACE48C-EF9B-4723-AFC0-B1A1551A9670

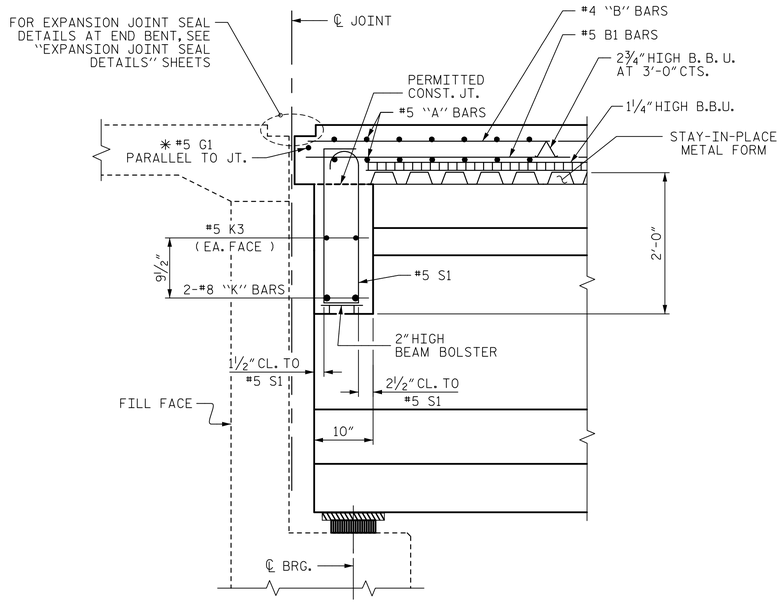

SECTION THRU END BENT DIAPHRAGM

✳ #5 G1 BARS MAY BE SHIFTED SLIGHTLY AS NECESSARY TO CLEAR REINFORCING STEEL AND STIRRUPS.

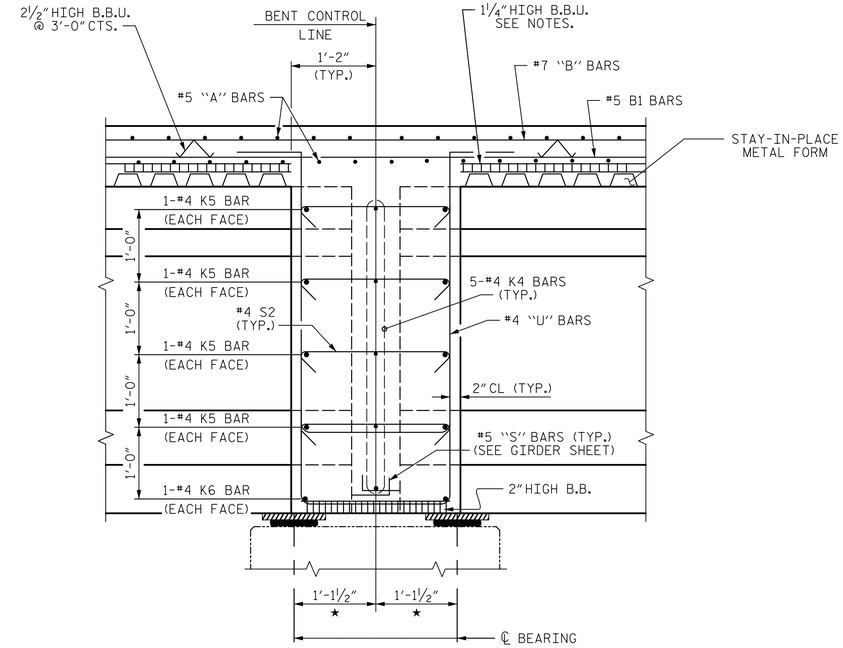

SECTION THRU CONTINUOUS BENT DIAPHRAGM

★ MEASURED ALONG ℄ GIRDER

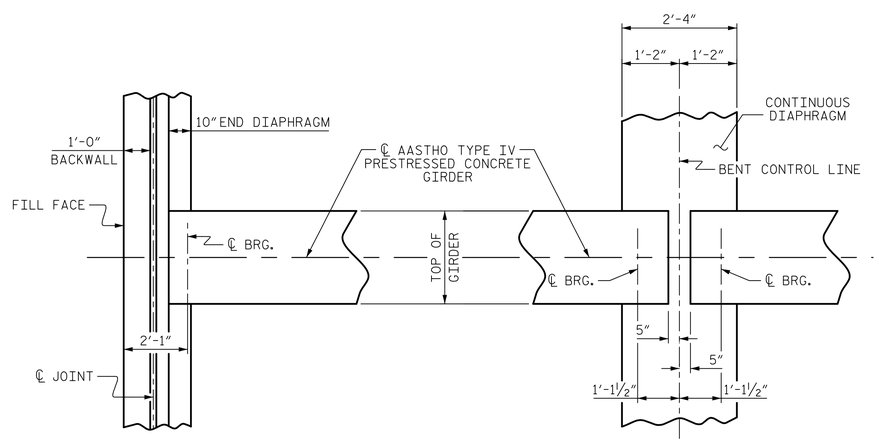

PLAN OF DIAPHRAGMS

PROJECT NO. B-5103

NEW HANOVER COUNTY

STATION: 16+84.96 -L-

SHEET 2 OF 2

STATE OF NORTH CAROLINA
DEPARTMENT OF TRANSPORTATION
RALEIGH

SUPERSTRUCTURE

TYPICAL SECTION DETAILS

Prepared by
URS
URS Corporation - North Carolina
1600 Perimeter Park Drive, Suite 400
Morrisville, NC 27560
PHONE: (919) 461-1100 FAX: (919) 461-1415
NC LIC.# C-2243

11/5/2014
NORTH CAROLINA PROFESSIONAL SEAL 038447 ENGINEER ANDREW S. MILLER
DocuSigned by: Andrew S. Miller
D5B20D9405446D...

REVISIONS						SHEET NO.
NO.	BY:	DATE:	NO.	BY:	DATE:	S-6
1			3			TOTAL SHEETS
2			4			48

DRAWN BY : M. K. TOM DATE : 7/2/14
CHECKED BY : K. H. COMPTON DATE : 8/25/14
DESIGNED BY : M. K. TOM DATE : 7/2/14

11/5/2014
R:\Structures\Submittals\2014_1101 Final Design and Tracings\Design Files\401_013_S01_B5103_TS_02.dgn
matt_tom