DocuSign Envelope ID: FFACE48C-EF9B-4723-AFC0-B1A1551A9670

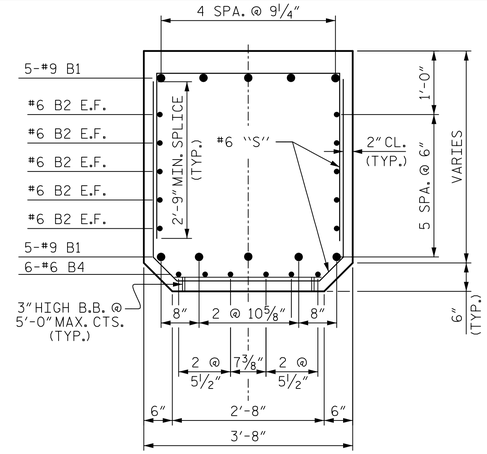

SECTION B-B

(E.F. = EACH FACE)

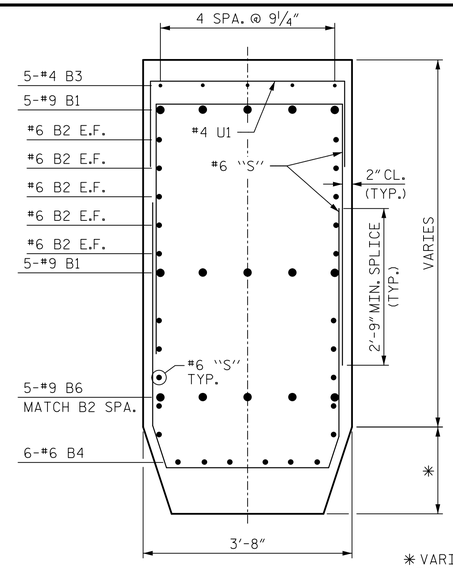

✱ VARIES PARALLEL TO SECTION CUT

SECTION C-C

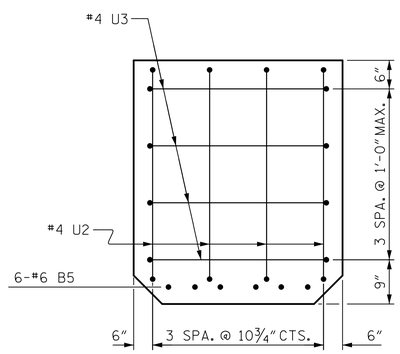

END VIEW

(TYP. BOTH ENDS OF CAP)

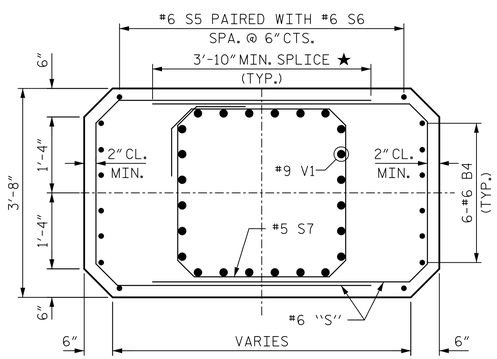

★ ADD ONE 4'-9" #6 S18 TO TOP PAIR OF S15 BARS (GROUP F) CENTERED ON EACH LAP

SECTION D-D

BAR TYPES

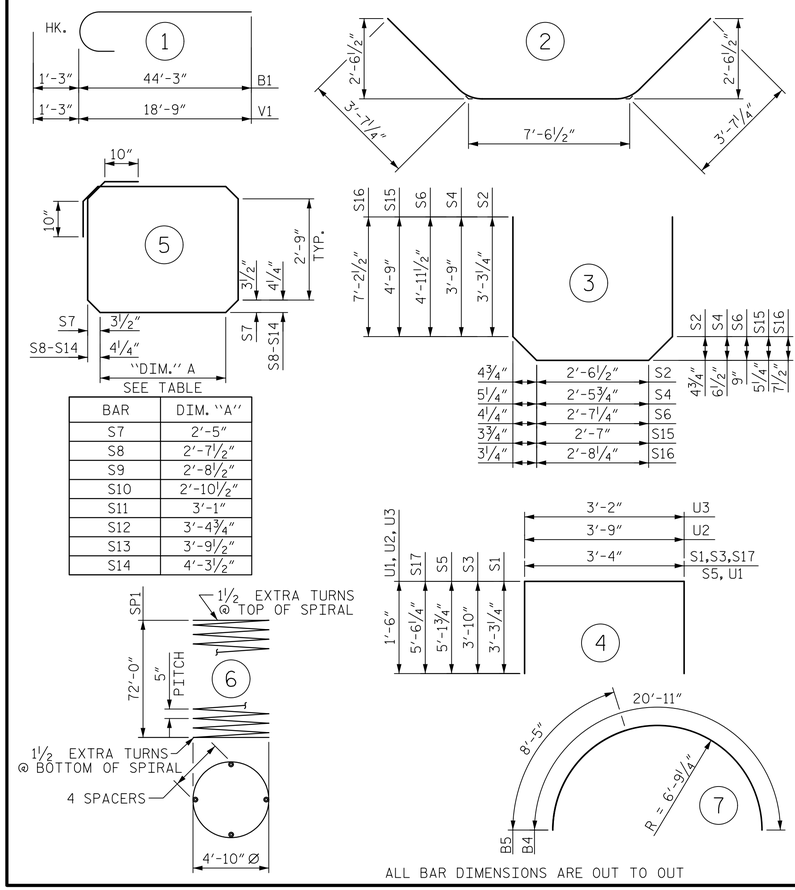

BAR	DIM. "A"
S7	2'-5"
S8	2'-7½"
S9	2'-8½"
S10	2'-10½"
S11	3'-1"
S12	3'-4¾"
S13	3'-9½"
S14	4'-3½"

ALL BAR DIMENSIONS ARE OUT TO OUT

BILL OF MATERIAL

BAR	NO.	SIZE	TYPE	LENGTH	WEIGHT
B1	20	9	1	45'-6"	3094
B2	20	6	STR.	41'-9"	1254
B3	10	4	STR.	22'-9"	152
B4	24	6	7	20'-11"	754
B5	12	6	7	8'-5"	152
B6	25	9	2	14'-9"	1254
M1	280	10	STR	41'-9"	50302
S1	46	6	4	9'-11"	685
S2	46	6	3	10'-3"	708
S3	40	6	4	11'-0"	661
S4	40	6	3	11'-5"	686
S5	40	6	4	13'-8"	821
S6	40	6	3	14'-3"	856
S7	45	5	5	13'-5"	630
S8	5	6	5	14'-5"	108
S9	5	6	5	14'-7"	110
S10	5	6	5	14'-11"	112
S11	5	6	5	15'-4"	115
S12	5	6	5	16'-0"	120
S13	5	6	5	16'-9"	126
S14	5	6	5	17'-9"	133
S15	30	6	3	13'-2"	593
S16	30	6	3	18'-6"	834
S17	70	6	4	14'-5"	1516
S18	10	6	STR	4'-9"	71
U1	47	4	4	6'-4"	199
U2	8	4	4	6'-9"	36
U3	8	4	4	6'-2"	33
V1	120	9	1	20'-0"	8160
REINFORCING STEEL					74,275 LBS.
SP-1	5	✱	6	2645'-4"	13795
SPIRAL COLUMN REINFORCING STEEL					13,795 LBS.

✱ THE SP-1 SPIRAL REINFORCING STEEL SHALL BE W31 OR D-31 COLD DRAWN WIRE OR #5 PLAIN OR DEFORMED BAR

CLASS A CONCRETE BREAKDOWN	
POUR #2 (COLUMNS)	7.3 C.Y.
POUR #3 (CAP)	75.0 C.Y.
TOTAL CLASS A CONCRETE	82.3 C.Y.

DRILLED PIERS:	
DRILLED PIER CONCRETE POUR #1 (DRILLED PIERS)	320.7 C.Y.
5'-6" Ø DRILLED PIERS	364.5 LIN. FT.
CSL TUBES	2232 LIN. FT.

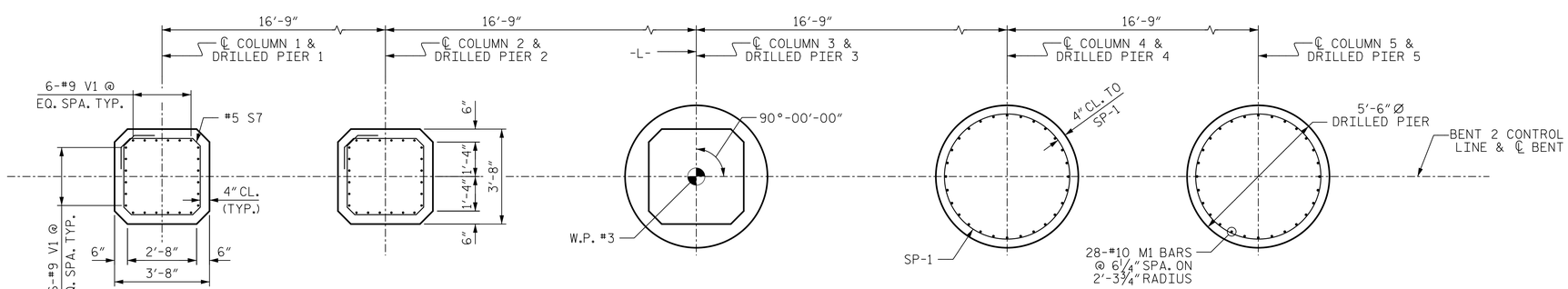

TYP. COLUMN REINFORCEMENT

TYP. DRILLED PIER REINFORCEMENT

PLAN OF DRILLED PIERS AND COLUMNS

PROJECT NO. B-5103

NEW HANOVER COUNTY

STATION: 16+84.96 -L-

SHEET 3 OF 3

STATE OF NORTH CAROLINA
DEPARTMENT OF TRANSPORTATION
RALEIGH

SUBSTRUCTURE

BENT 2

Prepared by
URS
URS Corporation - North Carolina
1600 Perimeter Park Drive, Suite 400
Morrisville, NC 27560
PHONE: (919) 461-1100 FAX: (919) 461-1415
NC LIC.# C-2243

11/5/2014
NORTH CAROLINA PROFESSIONAL SEAL 038447 ENGINEER ANDREW S. MILLER
DocuSigned by: Andrew S. Miller
D5B820D9405446D...

REVISIONS								SHEET NO.
NO.	BY:	DATE:	NO.	BY:	DATE:			S-42
1			3					TOTAL SHEETS
2			4					48

DRAWN BY :	K.H. COMPTON	DATE :	9/16/14
CHECKED BY :	A.S. MILLER	DATE :	9/23/14
DESIGNED BY :	A.S. MILLER	DATE :	8/25/14

11/5/2014
R:\Structures\Submittals\2014_1101 Final Design and Tracings\Design Files\401_085_S01_B5103_B2_03.dgn
matt_tom