PROJECT REFERENCE NO.	SHEET NO.
B-5103	2B-1
R/W SHEET NO.	

ROADWAY DESIGN ENGINEER
NORTH CAROLINA PROFESSIONAL SEAL 025873 ENGINEER GARY R. LOVERING

DocuSigned by: Gary Lovering 12/2/2014
DFD76F34A6BD425...

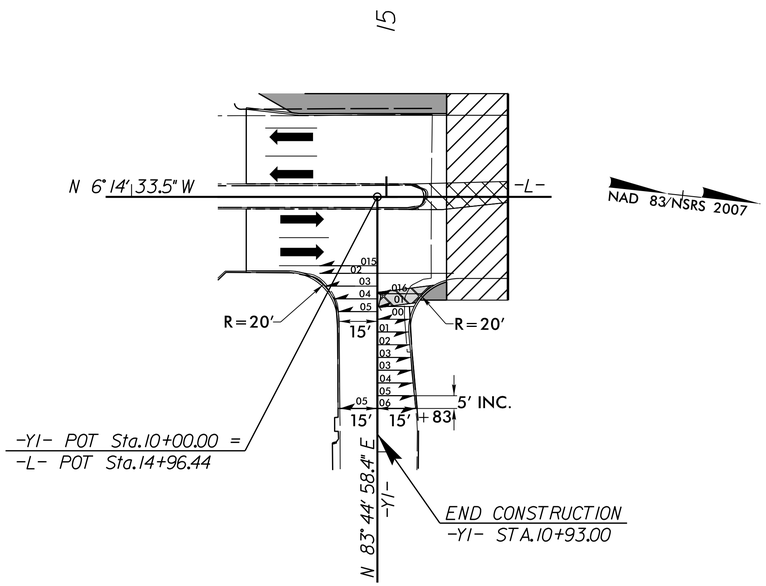

INTERSECTION DETAIL NO. 1

-Y1- CAMPBELL ST.

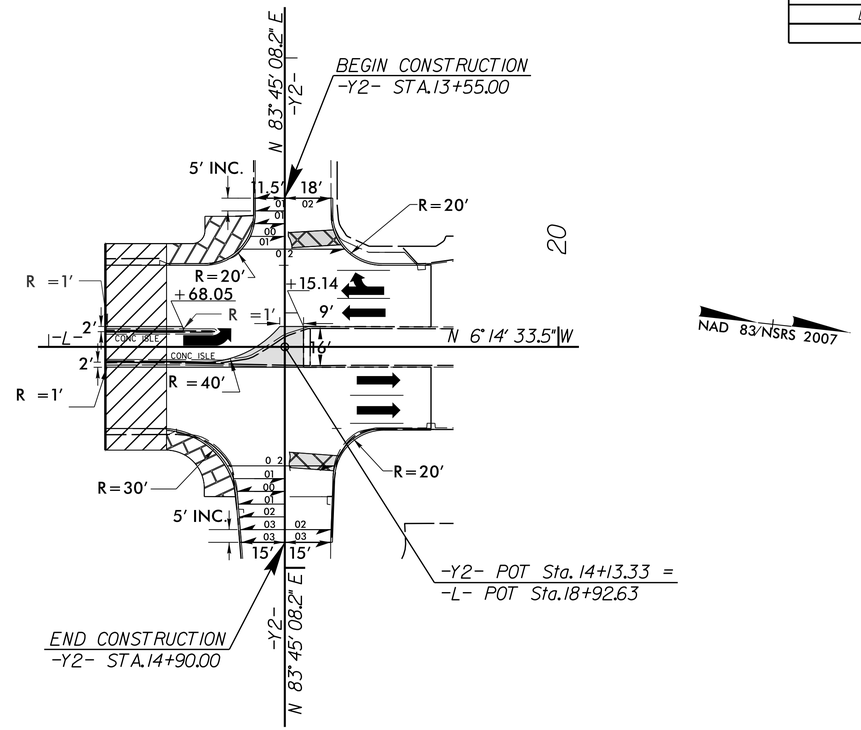

INTERSECTION DETAIL NO. 2

-Y2- HANOVER ST.

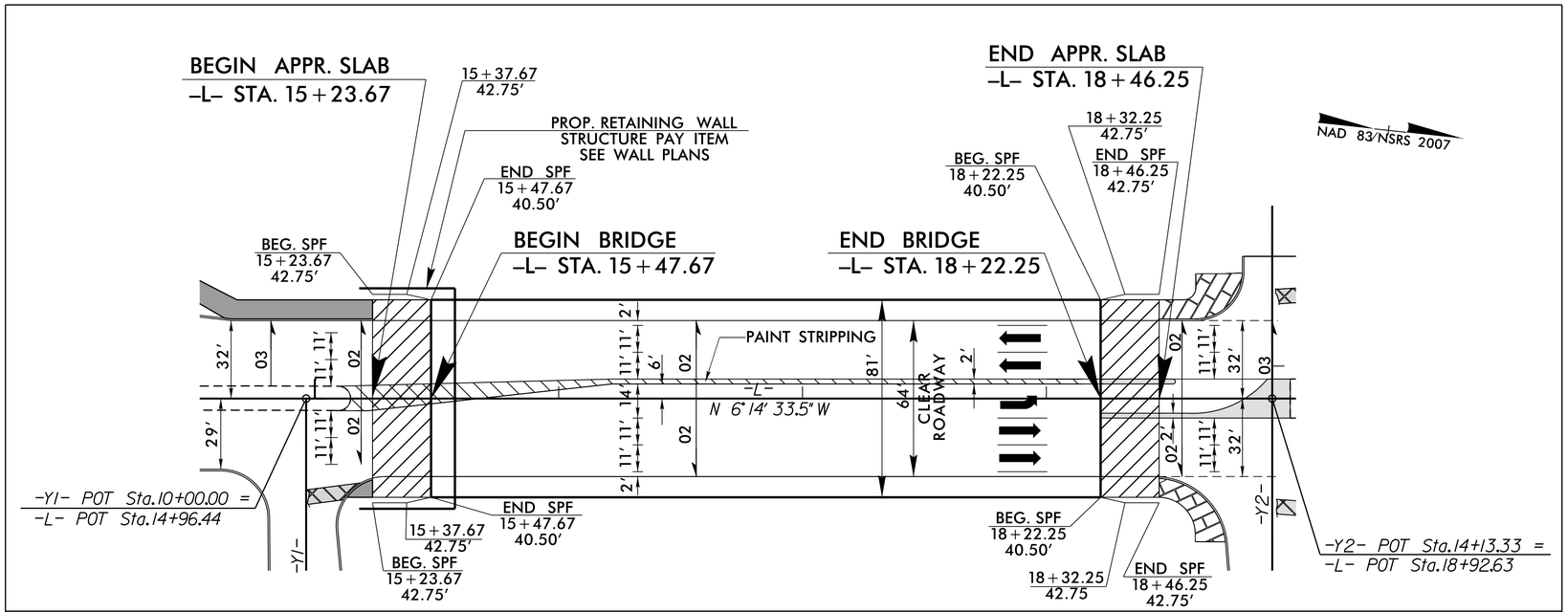

RELATIONSHIP OF BRIDGE TO PROPOSED PAVEMENT

BRICK PAVERS IN RADII (PAVERS PROVIDED BY OTHERS)

CROSSWALK WITH STREET PRINT XD IMPRINT (WORK TO BE DONE BY OTHERS)

SPF = SPECIAL PEDESTRIAN FENCE

SIDEWALK

MONOLITHIC CONCRETE ISLAND

BRIDGE APPROACH SLAB

30' 0' 30' 60'
15'

5/14/99
02-DEC-2014 09:02
$$$$USERNAME$$$$
$$$$USERPROJECT$$$$