DocuSign Envelope ID: 7A3943D1-E34D-495C-8947-318C9CD58D33

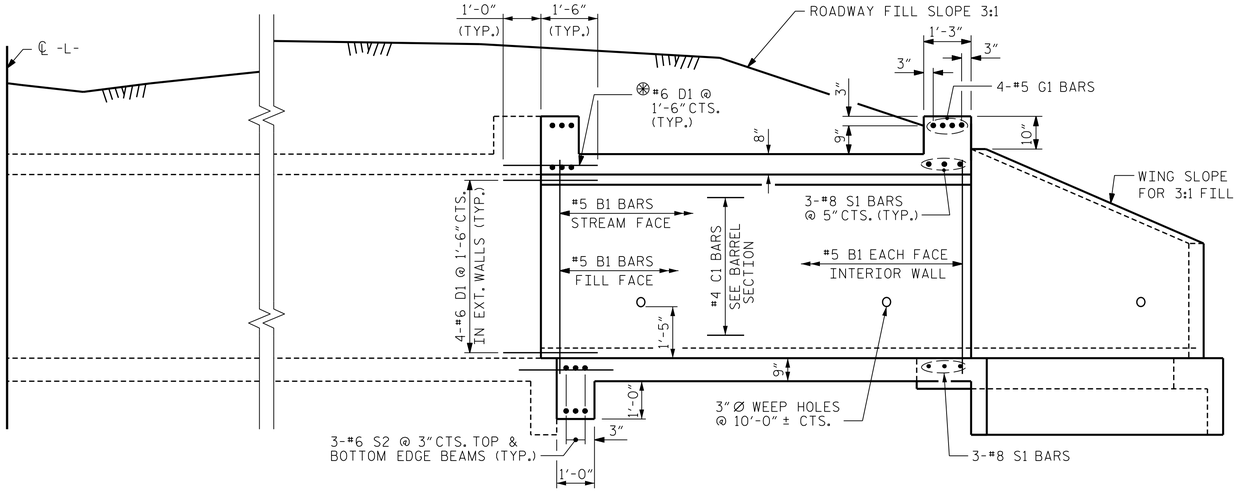

CULVERT SECTION NORMAL TO ROADWAY

#6 "D" DOWELS SHALL BE PLACED @ 1'-6" CTS. IN THE ROOF SLAB, FLOOR SLAB, INTERIOR WALLS AND EXTERIOR WALLS TO CONNECT THE CULVERT EXTENSION TO THE EXISTING CULVERT.

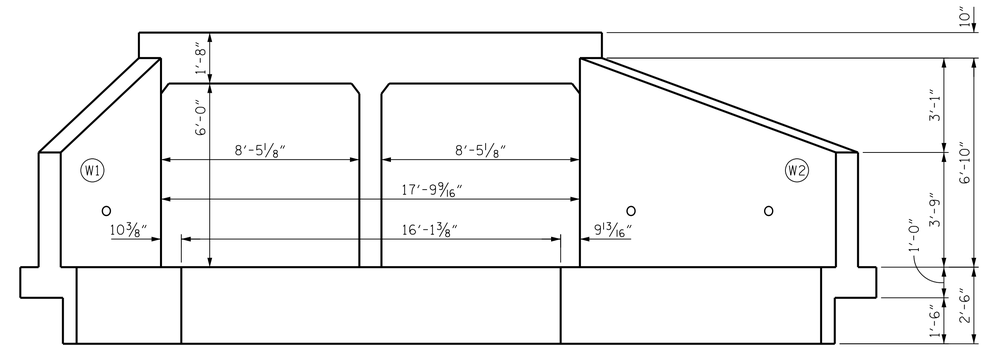

END ELEVATION NORMAL TO SKEW

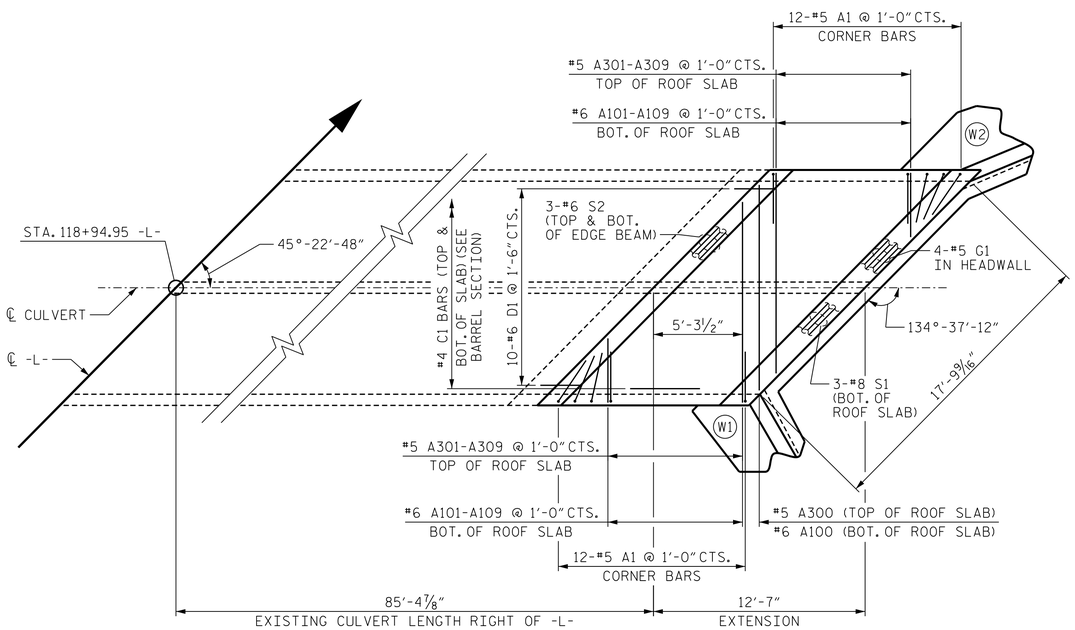

PLAN OF ROOF SLAB

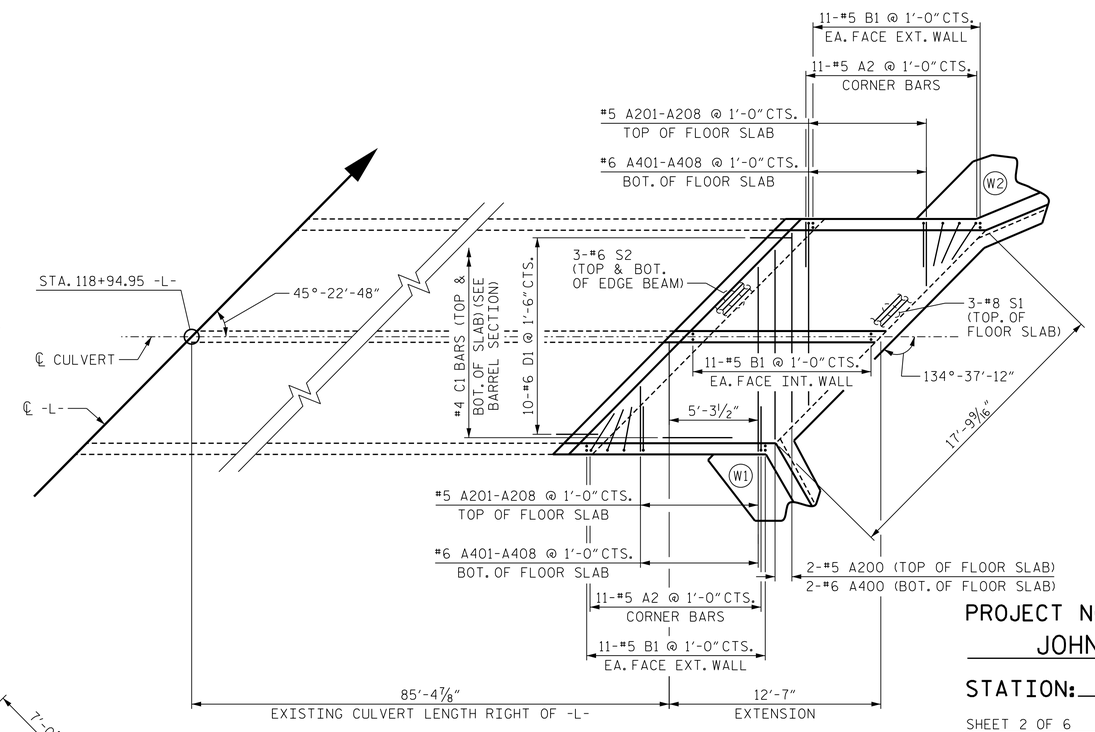

PLAN OF FLOOR SLAB

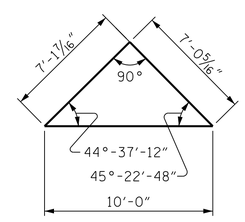

SKEW TRIANGLE

PROJECT NO. W-5107

JOHNSTON COUNTY

STATION: 118+94.95 -L-

SHEET 2 OF 6

STATE OF NORTH CAROLINA
DEPARTMENT OF TRANSPORTATION
RALEIGH

DOUBLE 6 FT. X 6 FT. CONCRETE BOX CULVERT EXTENSION

NORTH CAROLINA PROFESSIONAL SEAL 027799 ENGINEER PAUL A. de PAOLI
11/20/2014

MI ENGINEERING
1011 SCHAUB DRIVE, SUITE 100
RALEIGH, NC 27606
(919) 851-6606
FIRM PE NUMBER : P-0671

REVISIONS							SHEET NO.
NO.	BY:	DATE:	NO.	BY:	DATE:		C-32
1			3				TOTAL SHEETS
2			4				36

DRAWN BY :	J.S. ISRAELNAIM	DATE :	07/14
CHECKED BY :	P.A. de PAOLI	DATE :	07/14
DESIGN ENGINEER OF RECORD :	P.A. de PAOLI	DATE :	07/14

11/20/2014
10:29:43 AM
User: blanning
Filename: P:\NC Bridges\WI2005 - W-5107 Johnston Co\WI2005_07_Culvert 5_Ext_Quincosin Swamp at US 70 Byp\Structures\414_010_C05_W5107_SMU_CU2.dgn