DocuSign Envelope ID: 7A3943D1-E34D-495C-8947-318C9CD58D33

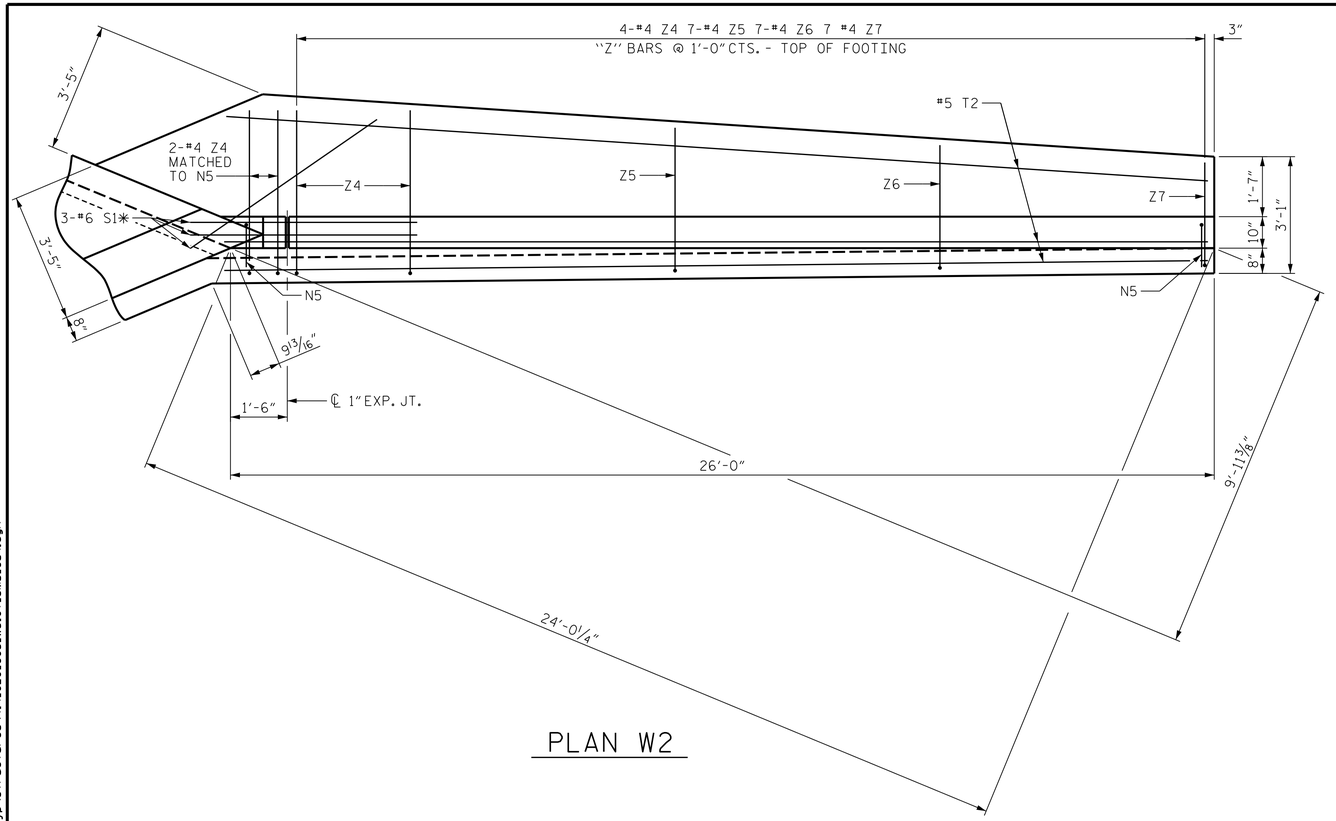

PLAN W2

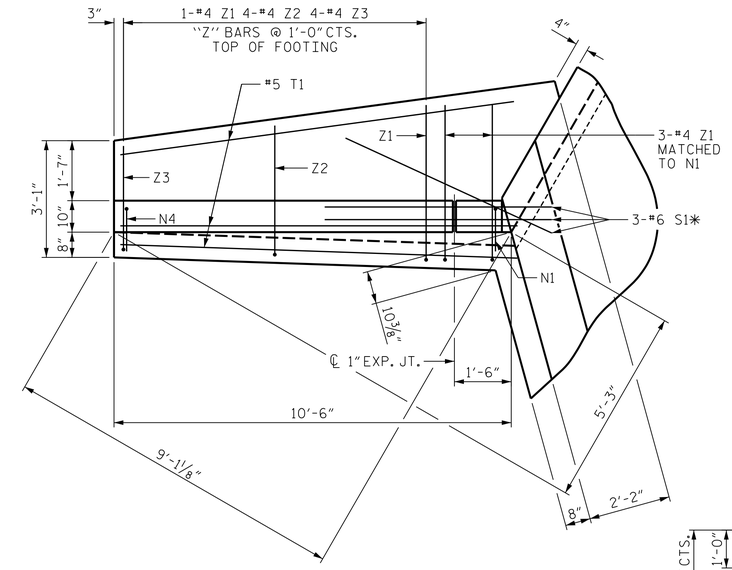

PLAN W1

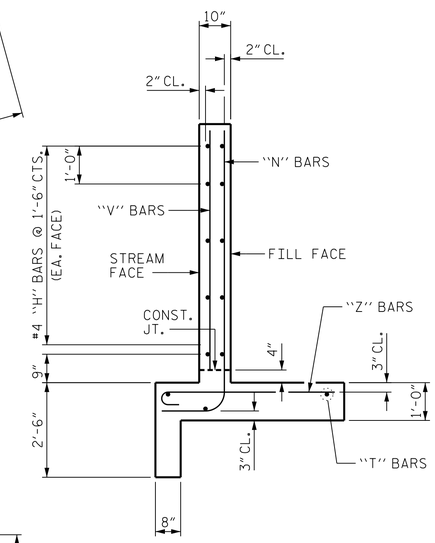

TYPICAL WING SECTION

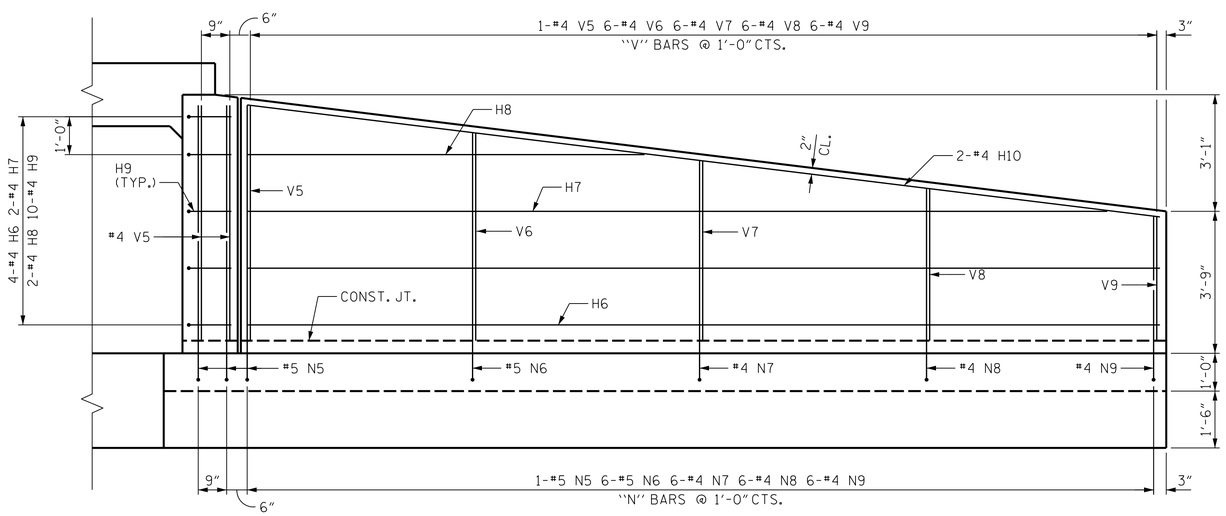

ELEVATION W2

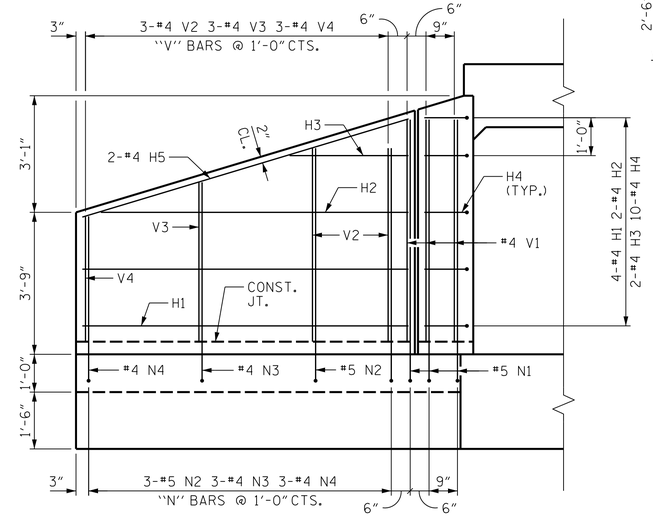

ELEVATION W1

PROJECT NO. W-5107

JOHNSTON COUNTY

STATION: 118+94.95 -L-

SHEET 4 OF 6

STATE OF NORTH CAROLINA
DEPARTMENT OF TRANSPORTATION
RALEIGH

WINGS FOR CONCRETE BOX CULVERT

H = 6'-0" SLOPE = 3:1

NORTH CAROLINA PROFESSIONAL SEAL 027799 ENGINEER PAUL A. de PAOLI
DocuSigned by: 11/20/2014

MI ENGINEERING
1011 SCHAUB DRIVE, SUITE 100
RALEIGH, NC 27606
(919) 851-6606
FIRM PE NUMBER : P-0671

REVISIONS								SHEET NO.
NO.	BY:	DATE:	NO.	BY:	DATE:			C-34
1			3					TOTAL SHEETS
2			4					36

DRAWN BY : J.S. ISRAELNAIM DATE : 07/14
CHECKED BY : P.A. de PAOLI DATE : 07/14
DESIGN ENGINEER OF RECORD : P.A. de PAOLI DATE : 07/14

11/20/2014
10:29:47 AM
User:blanning
Filename: P:\NC Bridges\MI2005 - W-5107 Johnston Co\MI2005.07.Culvert 5.Ext.Quincosin Swamp at US 70 Byp\Structures\414.020.C05.W5107.SMU.CU4.dgn