DocuSign Envelope ID: AAA130AC-665A-4842-A2EC-007D0796D67D

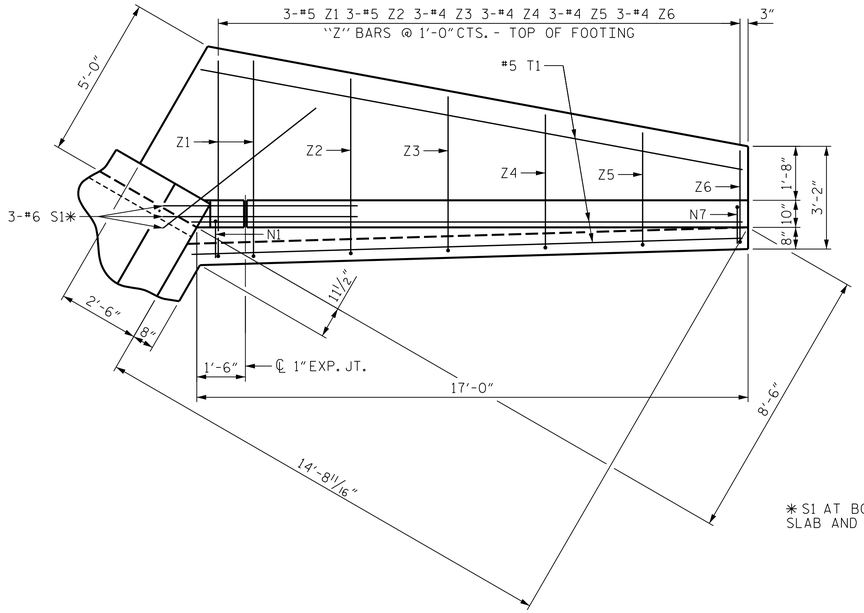

PLAN W1

✳ S1 AT BOTTOM OF FLOOR SLAB AND FOOTING

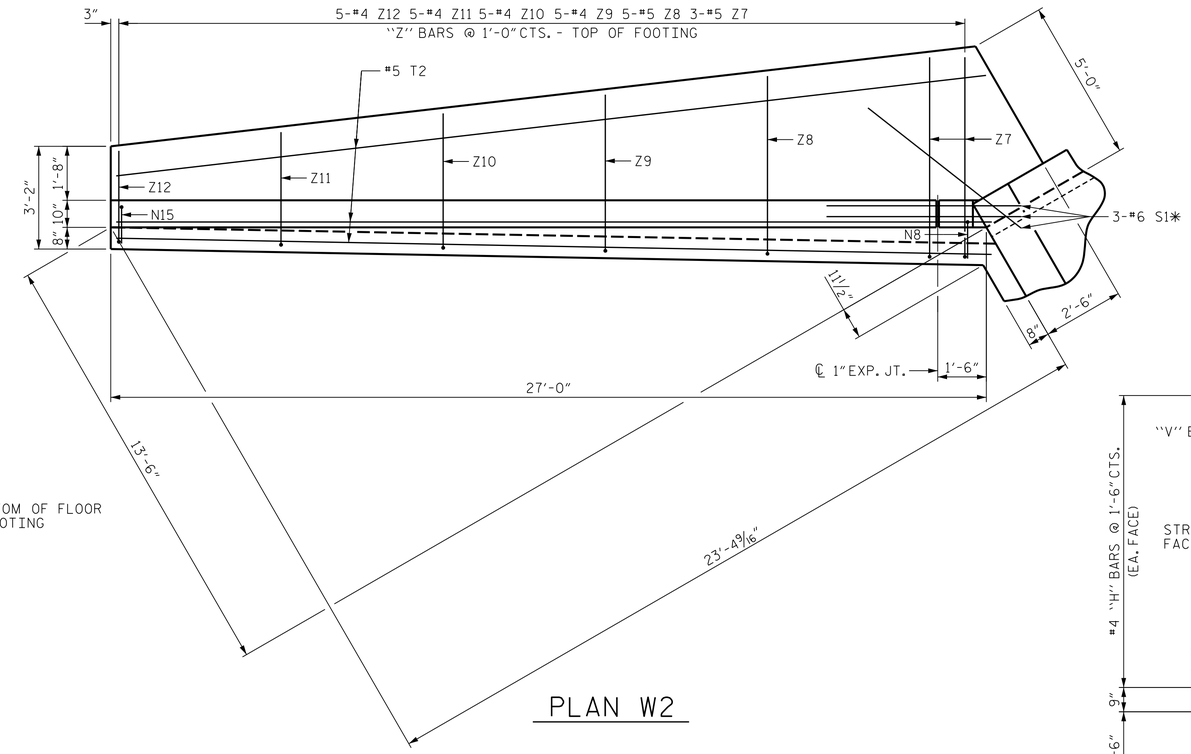

PLAN W2

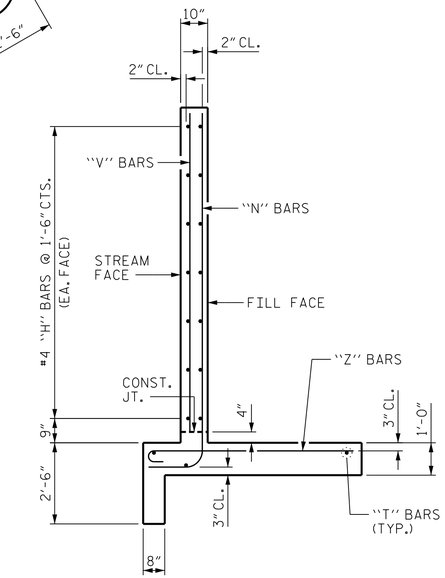

TYPICAL WING SECTION

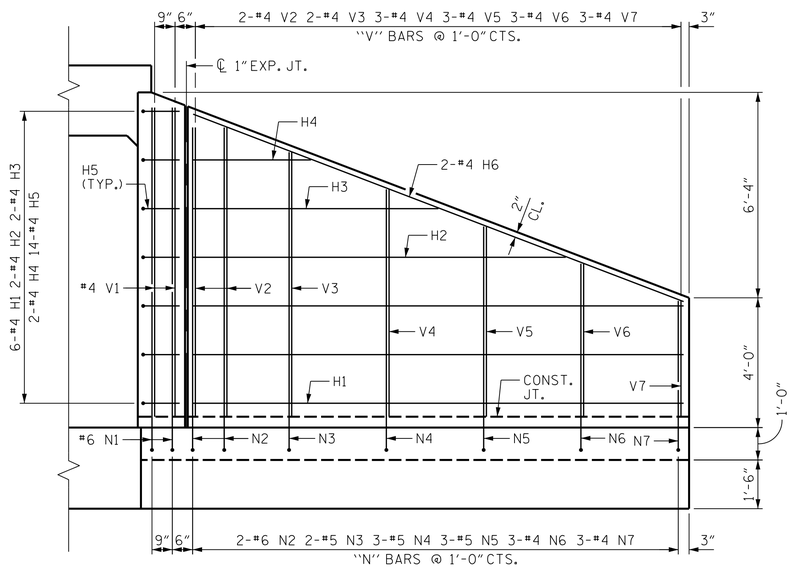

ELEVATION W1

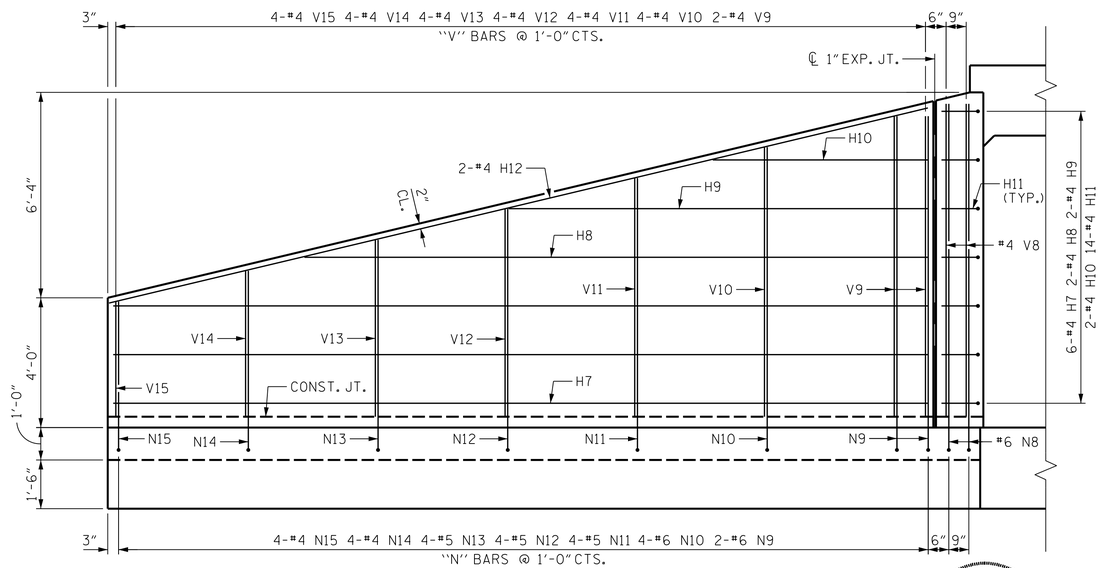

ELEVATION W2

PROJECT NO. W-5107

JOHNSTON COUNTY

STATION: 26+21.25 -Y6-

SHEET 4 OF 7

STATE OF NORTH CAROLINA
DEPARTMENT OF TRANSPORTATION
RALEIGH

WINGS FOR CONCRETE BOX CULVERT

H = 9'-0" SLOPE = 3:1

90° SKEW

NORTH CAROLINA PROFESSIONAL SEAL 027799 ENGINEER PAUL A. de PAOLI

11/20/2014

DRAWN BY : J.S. ISRAELNAIM DATE : 03/14
CHECKED BY : P.A. de PAOLI DATE : 03/14
DESIGN ENGINEER OF RECORD : P.A. de PAOLI DATE : 03/14

MI ENGINEERING
1011 SCHAUB DRIVE, SUITE 100
RALEIGH, NC 27606
(919) 851-6606
FIRM PE NUMBER : P-0671

REVISIONS								SHEET NO.
NO.	BY:	DATE:	NO.	BY:	DATE:			C-27
1			3					TOTAL SHEETS
2			4					36

11/20/2014
10:24:52 AM
User: blanning
Filename: P:\NC Bridges\MI2005 - W-5107 Johnston Co\MI2005.06.Culvert 4.New.Quincosin Swamp at -Y6-\Structures\413.020.C04.W5107.SMU.CU4.dgn