DocuSign Envelope ID: 62F4EDF2-40A2-456A-8C52-0B1183872025

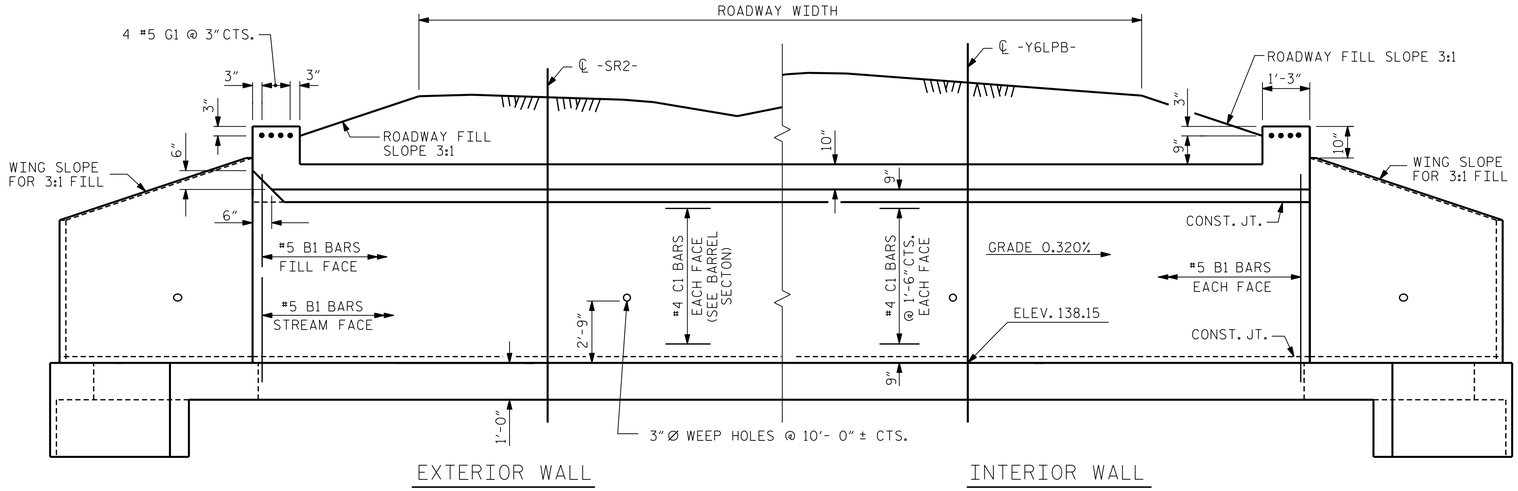


## CULVERT SECTION NORMAL TO ROADWAY

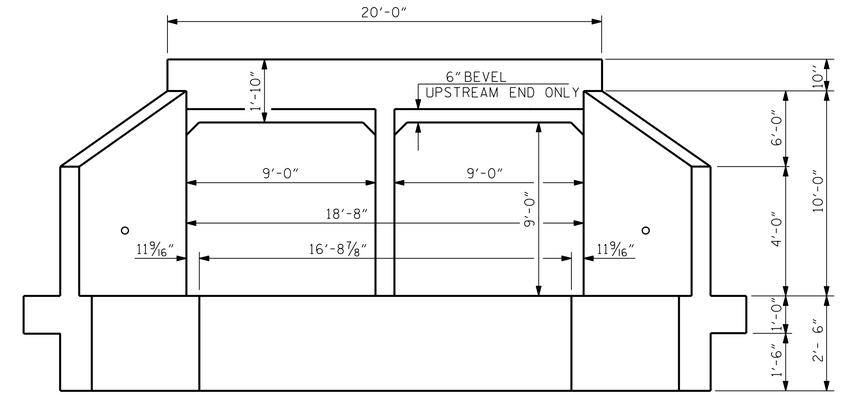


## UPSTREAM END ELEVATION

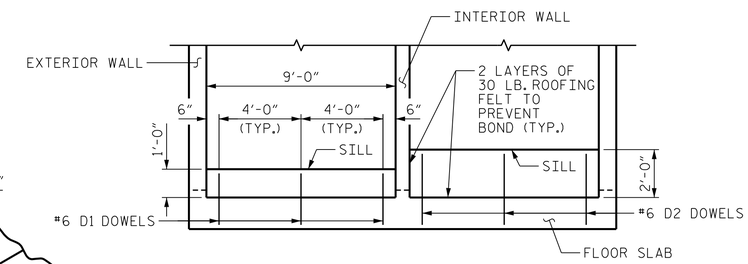


ELEVATION

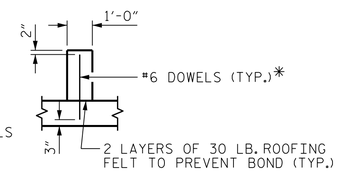


SECTION THROUGH SILL

*DOWELS MAY BE PUSHED INTO GREEN CONCRETE AFTER SLAB HAS BEEN FLOAT FINISHED.

## CULVERT SILL DETAILS

(LOOKING DOWNSTREAM)

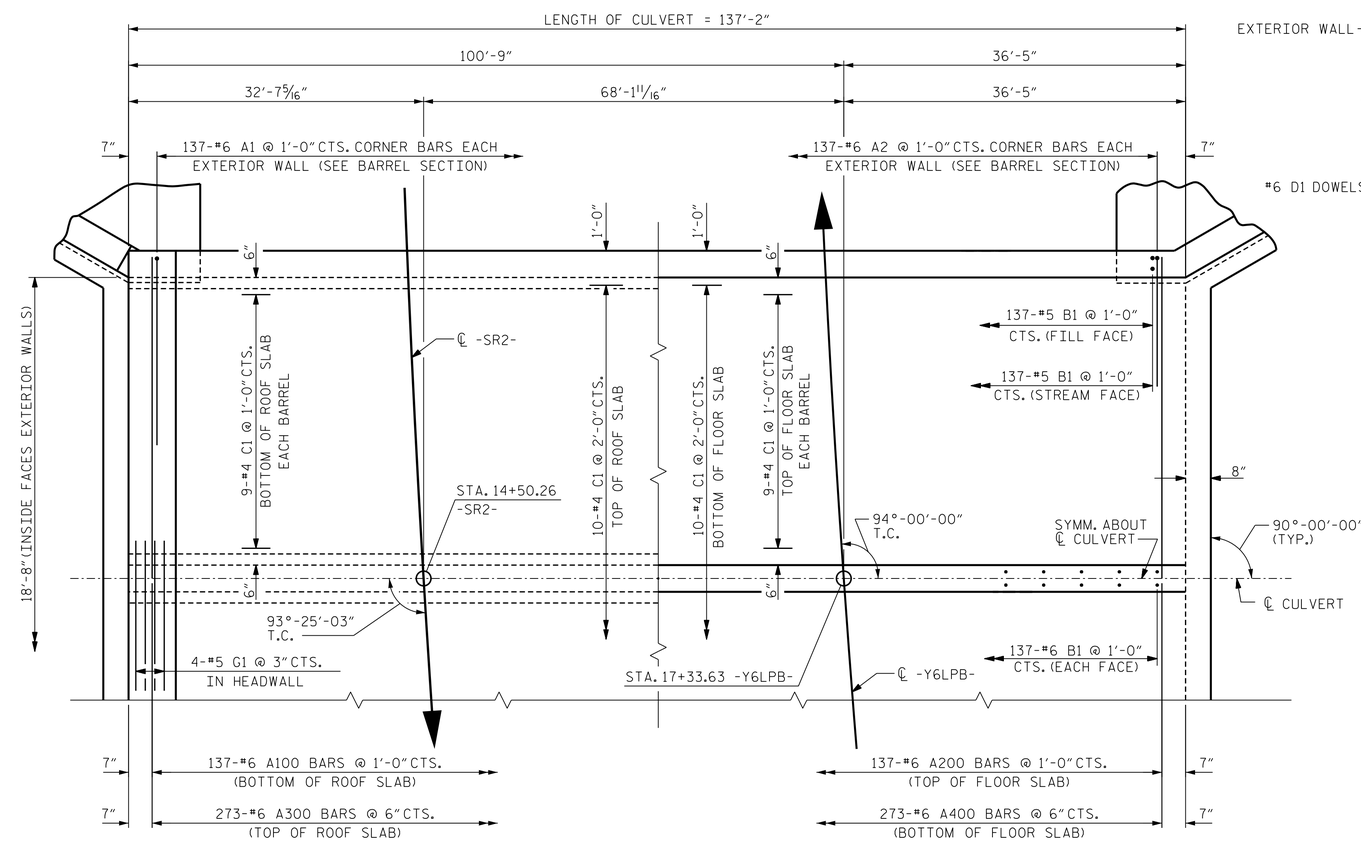


PART PLAN-ROOF SLAB

PART PLAN-FLOOR SLAB

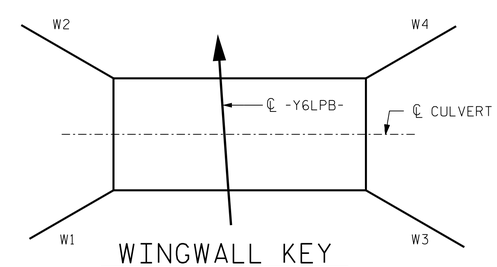


WINGWALL KEY

I HEREBY CERTIFY THESE PLANS ARE THE AS-BUILT PLANS

PROJECT NO. W-5107

JOHNSTON COUNTY

STATION: 17+33.63 -Y6LPB-

SHEET 2 OF 7

STATE OF NORTH CAROLINA
DEPARTMENT OF TRANSPORTATION
RALEIGH

# BARREL STANDARD DOUBLE 9 FT. X 9 FT. CONCRETE BOX CULVERT

NORTH CAROLINA PROFESSIONAL SEAL 027799 ENGINEER PAUL A. de PAOLI
11/20/2014

MI ENGINEERING
1011 SCHAUB DRIVE, SUITE 100
RALEIGH, NC 27606
(919) 851-6606
FIRM PE NUMBER : P-0671

| REVISIONS | | | | | | | SHEET NO. |
|---|---|---|---|---|---|---|---|
| NO. | BY: | DATE: | NO. | BY: | DATE: | | C-18 |
| 1 | | | 3 | | | | TOTAL SHEETS |
| 2 | | | 4 | | | | 36 |

ASSEMBLED BY : J.S. ISRAELNAIM DATE : 06/14
CHECKED BY : P.A. de PAOLI DATE : 06/14
DESIGN ENGINEER OF RECORD : P.A. de PAOLI DATE : 06/14

DRAWN BY : RALPH D. UNDERWOOD DATE : MAY 1971
CHECKED BY : JOEL A. JOHNSON DATE : JULY 1971

SPECIAL

STANDARD

11/20/2014
10:18:52 AM
User: blanning
Filename: P:\NC Bridges\MI2005 - W-5107 Johnston Co\MI2005.05_Culvert 3_New_Quincosin Swamp at -Y6LPB-\Structures\412.010.C03_W5107_SMU_CU2.dgn