DocuSign Envelope ID: 62F4EDF2-40A2-456A-8C52-0B1183872025

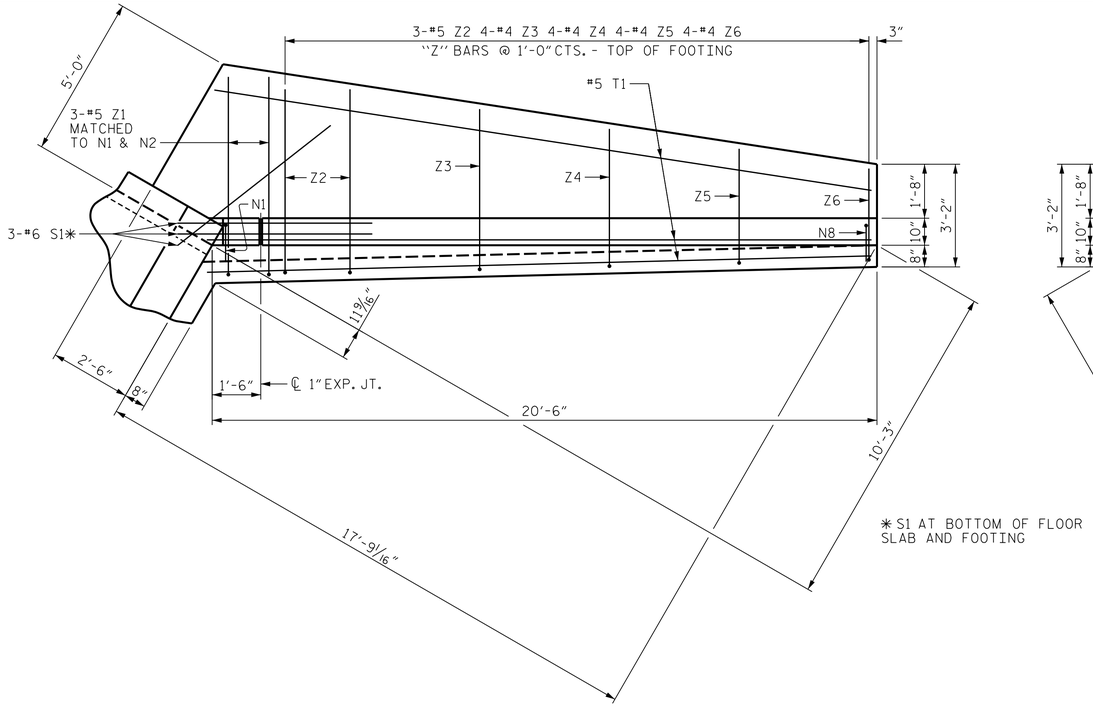


PLAN W1

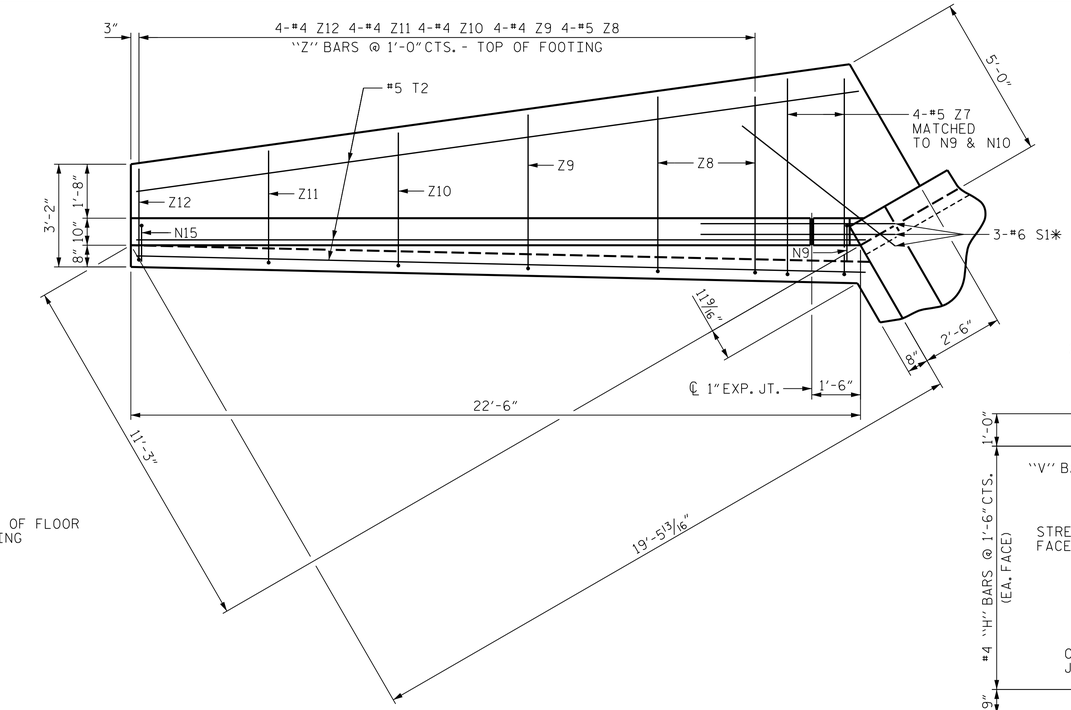


PLAN W2

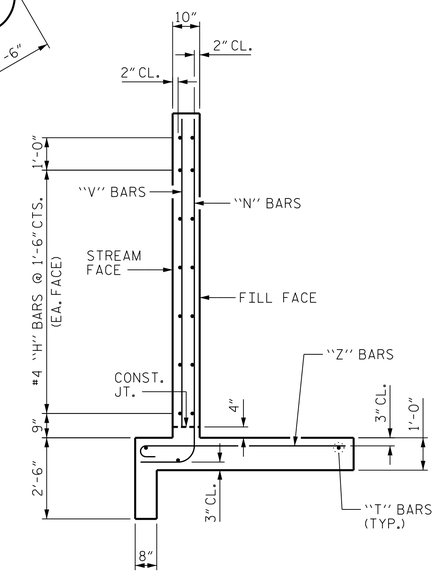


TYPICAL WING SECTION

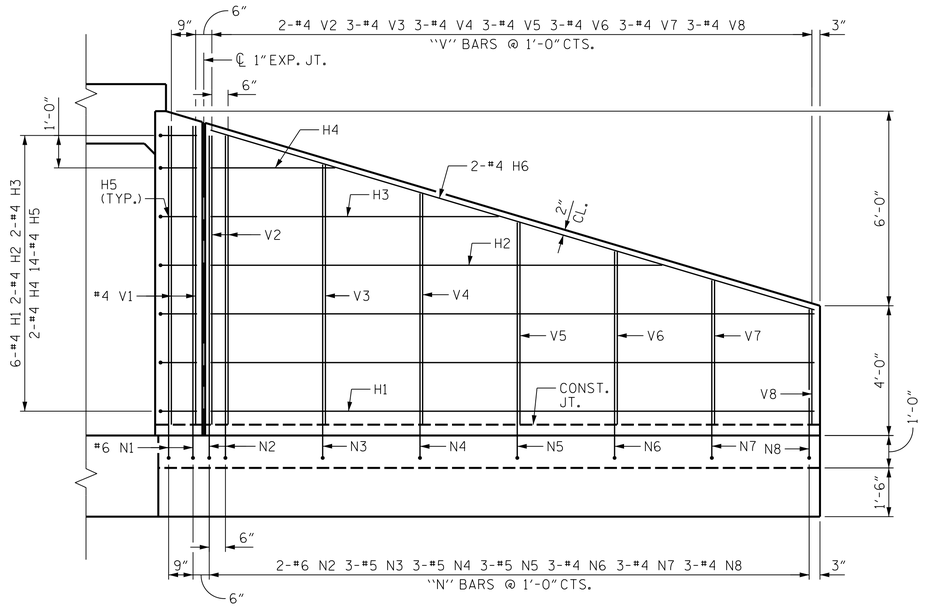


ELEVATION W1

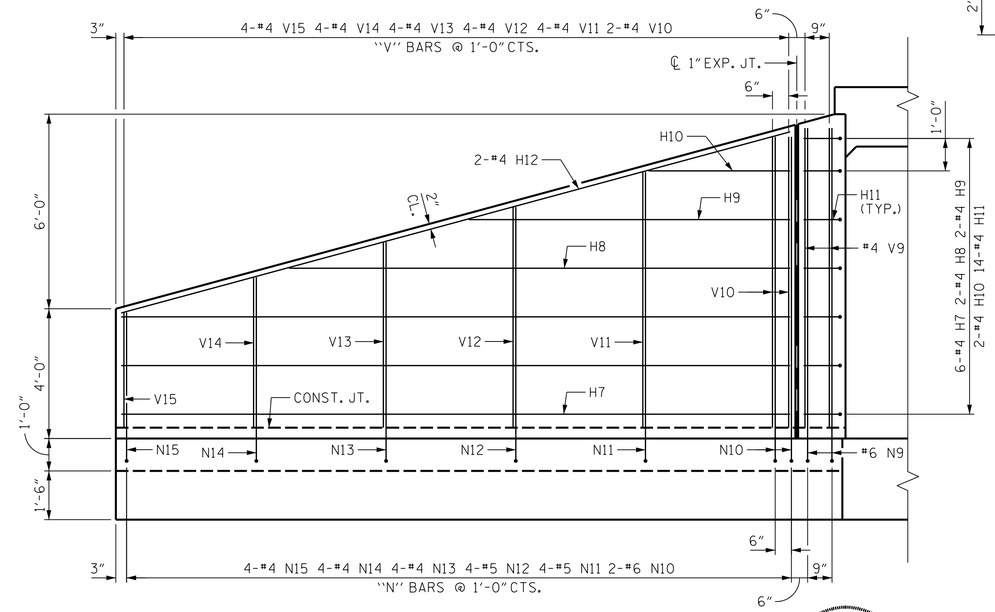


ELEVATION W2

PROJECT NO. W-5107

JOHNSTON COUNTY

STATION: 17+33.63 -Y6LPB-

SHEET 4 OF 7

STATE OF NORTH CAROLINA
DEPARTMENT OF TRANSPORTATION
RALEIGH

WINGS FOR
CONCRETE BOX CULVERT

H = 9'-0" SLOPE = 3:1

NORTH CAROLINA PROFESSIONAL SEAL 027799 ENGINEER PAUL A. de PAOLI

11/20/2014

MI ENGINEERING
1011 SCHAUB DRIVE, SUITE 100
RALEIGH, NC 27606
(919) 851-6606
FIRM PE NUMBER : P-0671

| REVISIONS | | | | | | | SHEET NO. |
|---|---|---|---|---|---|---|---|
| NO. | BY: | DATE: | NO. | BY: | DATE: | | C-20 |
| 1 | | | 3 | | | | TOTAL SHEETS |
| 2 | | | 4 | | | | 36 |

| | | | |
|---|---|---|---|
| DRAWN BY : | J.S. ISRAELNAIM | DATE : | 06/14 |
| CHECKED BY : | P.A. de PAOLI | DATE : | 06/14 |
| DESIGN ENGINEER OF RECORD : | P.A. de PAOLI | DATE : | 06/14 |

11/20/2014
10:18:58 AM
User: blanning
Filename: P:\NC Bridges\W12005 - W-5107 Johnston Co\W12005_05_Culvert 3_New_Quincosin Swamp at -Y6LPB-\Structures\412_020_C03_W5107_SMU_CU4.dgn