DocuSign Envelope ID: 62F4EDF2-40A2-456A-8C52-0B1183872025

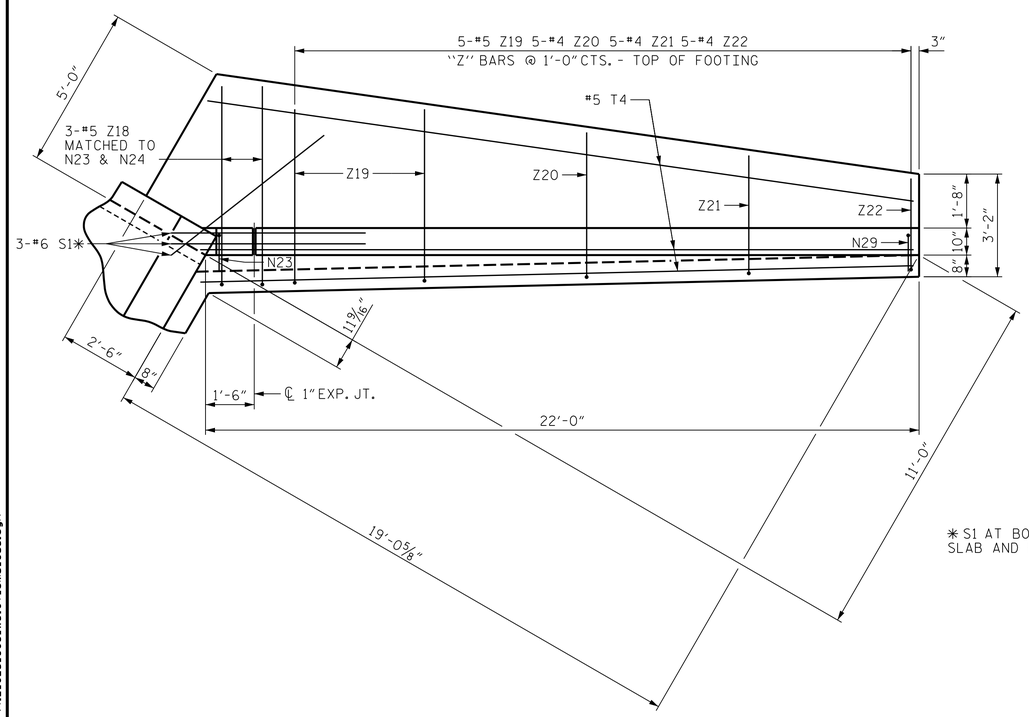


PLAN W4

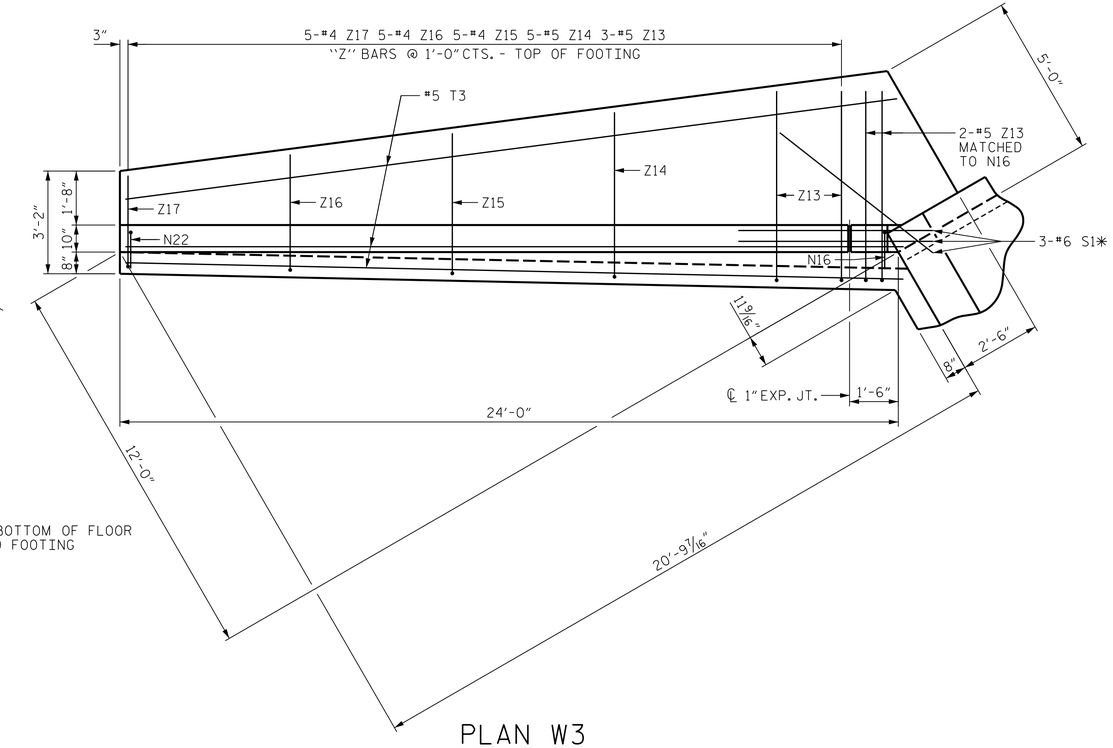


✱ S1 AT BOTTOM OF FLOOR SLAB AND FOOTING

PLAN W3

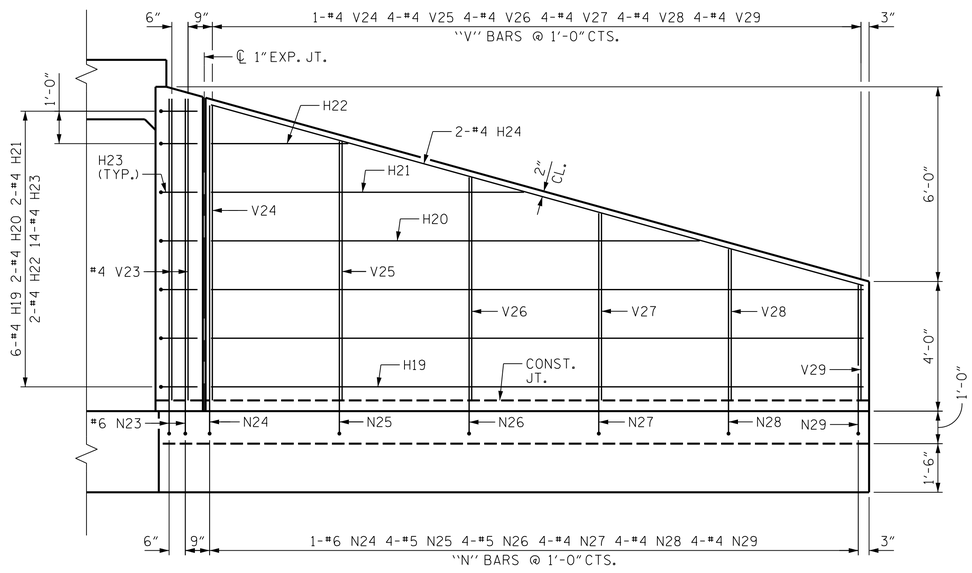


ELEVATION W4

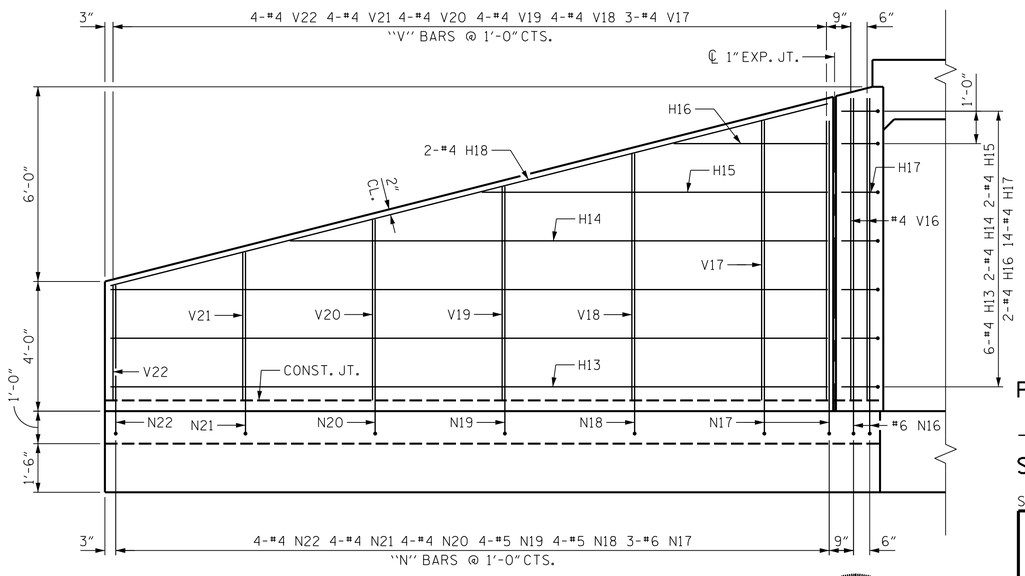


ELEVATION W4

ELEVATION W3

PROJECT NO. W-5107

JOHNSTON COUNTY

STATION: 17+33.63 -Y6LPB-

SHEET 5 OF 7

STATE OF NORTH CAROLINA
DEPARTMENT OF TRANSPORTATION
RALEIGH

# WINGS FOR CONCRETE BOX CULVERT

H = 9'-0" SLOPE = 3:1

NORTH CAROLINA PROFESSIONAL SEAL 027799 ENGINEER PAUL A. de PAOLI
11/20/2014

MI ENGINEERING
1011 SCHAUB DRIVE, SUITE 100
RALEIGH, NC 27606
(919) 851-6606
FIRM PE NUMBER : P-0671

| REVISIONS | | | | | | | SHEET NO. |
|---|---|---|---|---|---|---|---|
| NO. | BY: | DATE: | NO. | BY: | DATE: | | C-21 |
| 1 | | | 3 | | | | TOTAL SHEETS |
| 2 | | | 4 | | | | 36 |

DRAWN BY : J.S. ISRAELNAIM DATE : 06/14
CHECKED BY : P.A. de PAOLI DATE : 06/14
DESIGN ENGINEER OF RECORD : P.A. de PAOLI DATE : 06/14

11/20/2014
10:19:00 AM
User: blanning
Filename: P:\NC Bridges\MI2005 - W-5107 Johnston Co\MI2005.05.Culvert 3.New.Quincosin Swamp at -Y6LPB-\Structures\412.025.C03.W5107.SMU.CU5.dgn