DocuSign Envelope ID: 697BD2C9-C5FC-4A21-B1D8-89A5640C220C

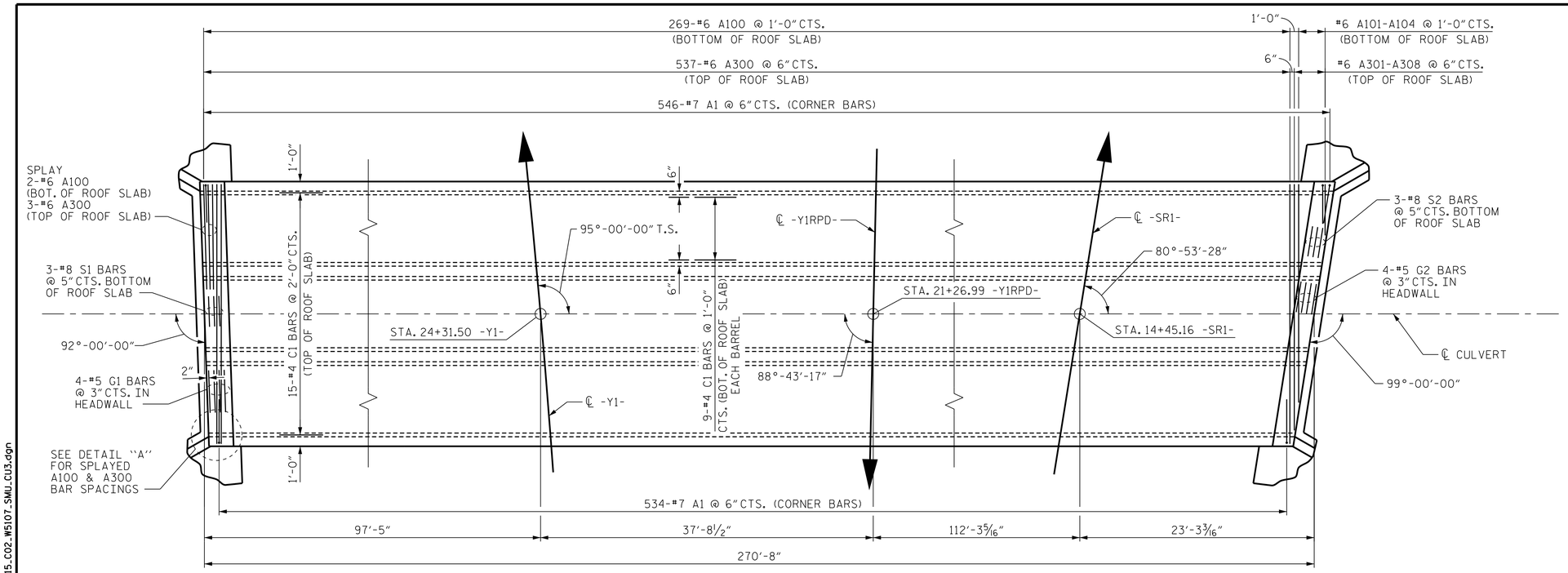

PLAN OF ROOF SLAB

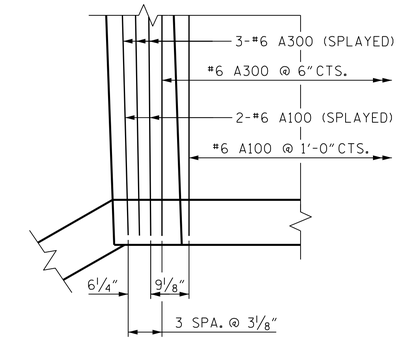

DETAIL "A"

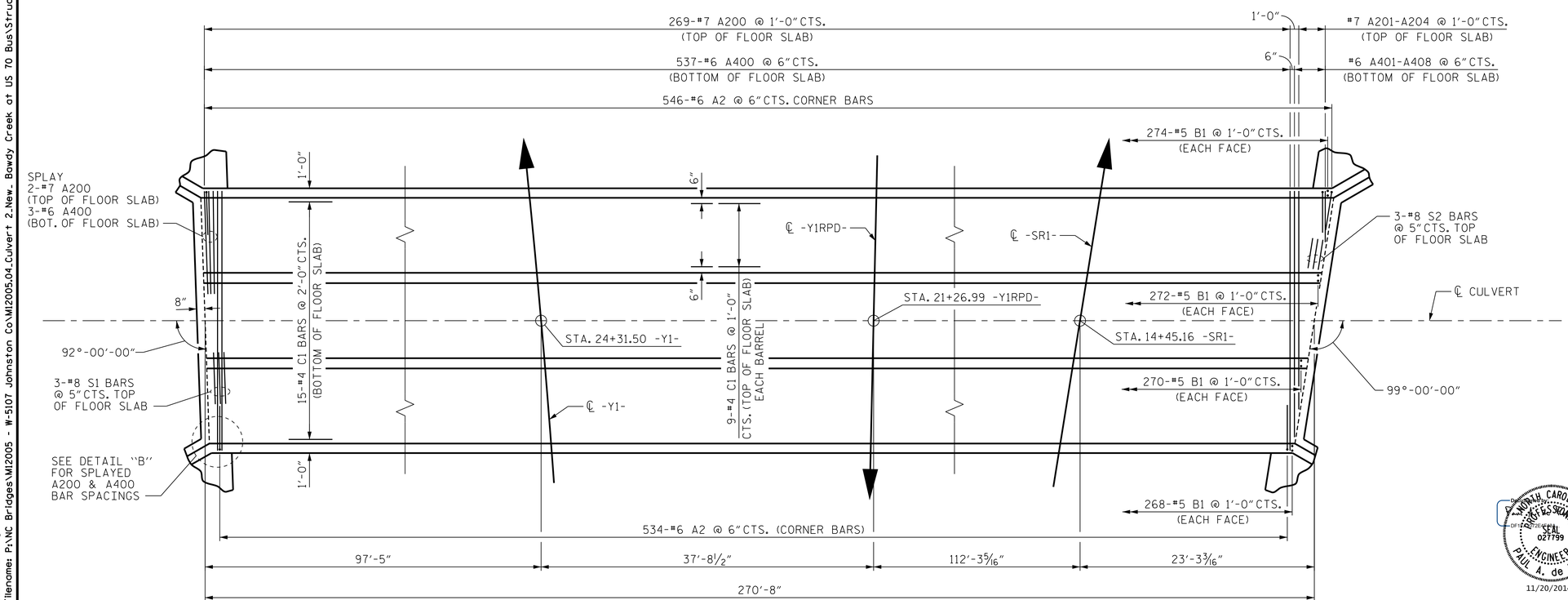

PLAN OF FLOOR SLAB

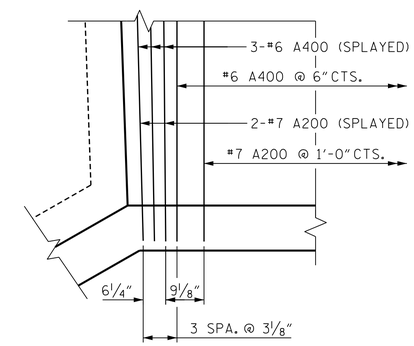

DETAIL "B"

PROJECT NO. W-5107

JOHNSTON COUNTY

STATION: 24+31.50 -Y1-

SHEET 3 OF 9

STATE OF NORTH CAROLINA
DEPARTMENT OF TRANSPORTATION
RALEIGH

TRIPLE 9 FT. X 9 FT. CONCRETE BOX CULVERT

NORTH CAROLINA PROFESSIONAL SEAL 027799 ENGINEER PAUL A. de PAOLI

11/20/2014

DRAWN BY :	J.S. ISRAELNAIM	DATE :	05/14
CHECKED BY :	P.A. de PAOLI	DATE :	06/14
DESIGN ENGINEER OF RECORD :	P.A. de PAOLI	DATE :	06/14

MI ENGINEERING
1011 SCHAUB DRIVE, SUITE 100
RALEIGH, NC 27606
(919) 851-6606
FIRM PE NUMBER : P-0671

REVISIONS							
NO.	BY:	DATE:	NO.	BY:	DATE:	SHEET NO.	C-10
1			3			TOTAL SHEETS	36
2			4				

11/20/2014
10:13:23 AM
User: blanning
Filename: P:\NC Bridges\MI2005 - W-5107 Johnston Co\MI2005.04_Culvert 2_New. Bowdy Creek at US 70 Bus\Structures\411_015_C02_W5107_SMU_CU3.dgn