DocuSign Envelope ID: 697BD2C9-C5FC-4A21-B1D8-89A5640C220C

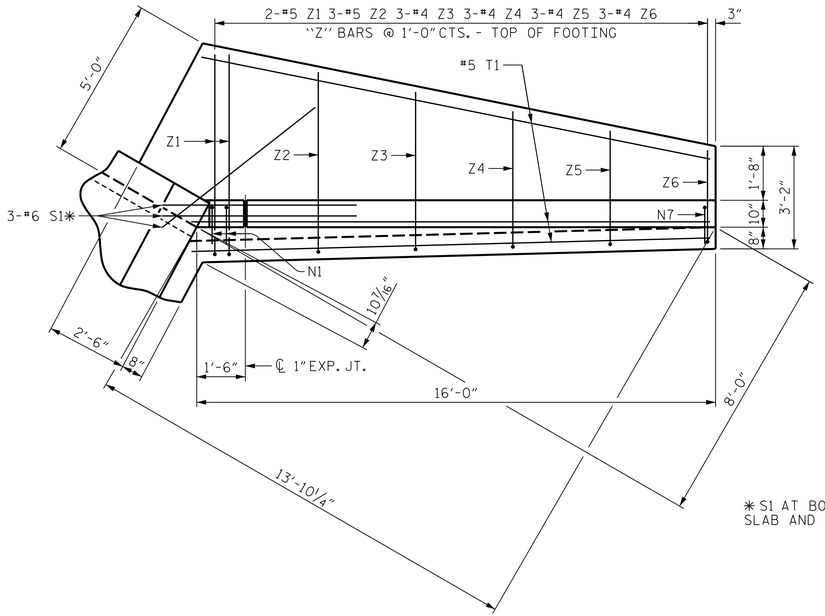

PLAN W1

✱ S1 AT BOTTOM OF FLOOR SLAB AND FOOTING

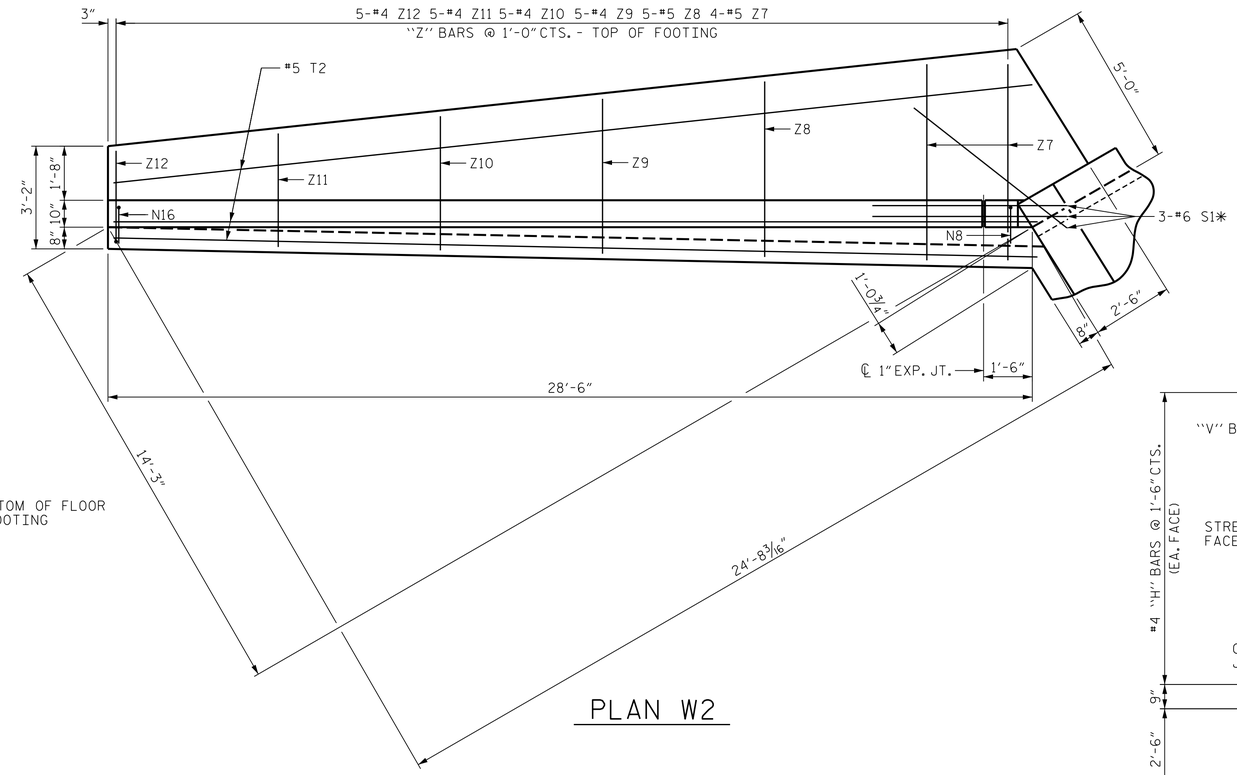

PLAN W2

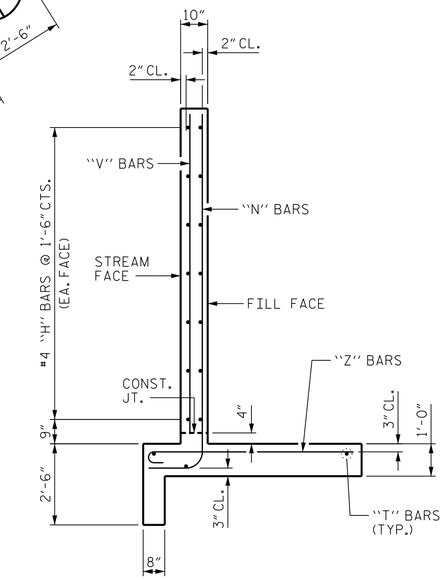

TYPICAL WING SECTION

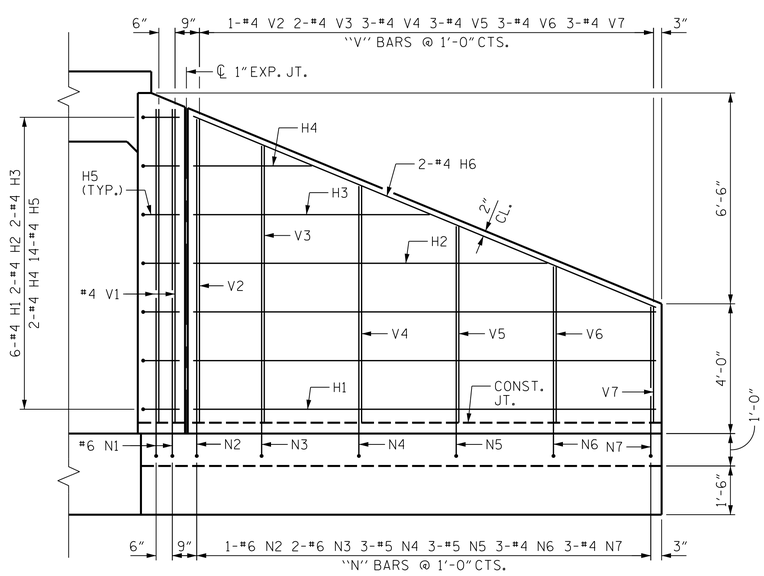

ELEVATION W1

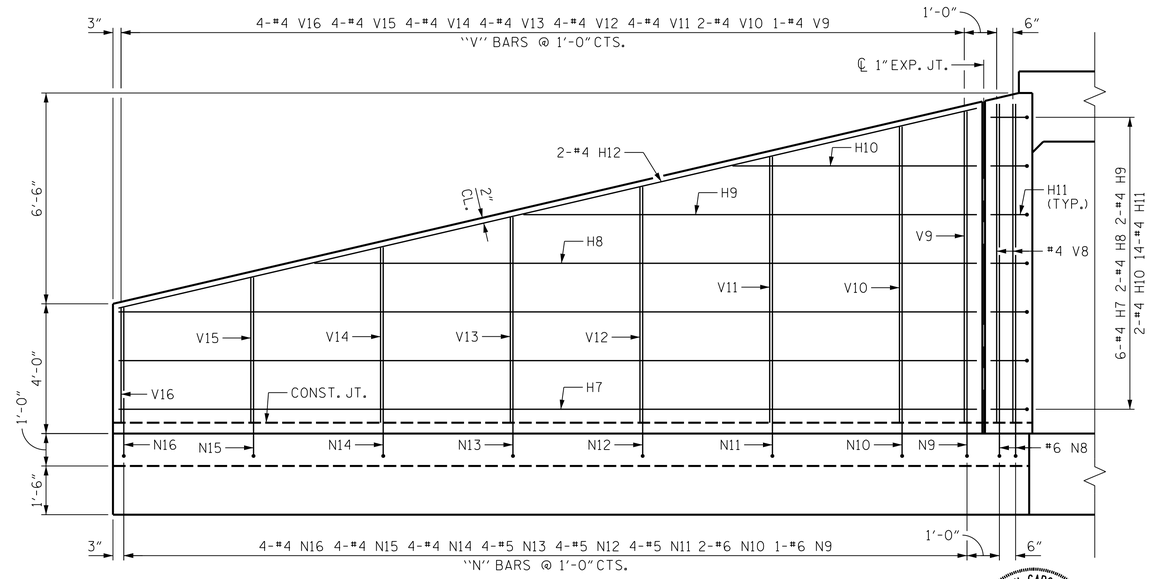

ELEVATION W2

PROJECT NO. W-5107

JOHNSTON COUNTY

STATION: 24+31.50 -Y1-

SHEET 5 OF 9

STATE OF NORTH CAROLINA
DEPARTMENT OF TRANSPORTATION
RALEIGH

WINGS FOR CONCRETE BOX CULVERT

H = 9'-0" SLOPE = 3:1

NORTH CAROLINA PROFESSIONAL SEAL 027799 ENGINEER PAUL A. de PAOLI

11/20/2014

DRAWN BY : J.S. ISRAELNAIM	DATE : 05/14
CHECKED BY : P.A. de PAOLI	DATE : 06/14
DESIGN ENGINEER OF RECORD : P.A. de PAOLI	DATE : 06/14

MI ENGINEERING
1011 SCHAUB DRIVE, SUITE 100
RALEIGH, NC 27606
(919) 851-6606
FIRM PE NUMBER : P-0671

REVISIONS						
NO.	BY:	DATE:	NO.	BY:	DATE:	
1			3			
2			4			

SHEET NO. C-12

TOTAL SHEETS 36

11/20/2014
10:13:27 AM
User: blanning
Filename: P:\NC Bridges\W12005 - W-5107 Johnston Co\W12005_04_Culvert 2_New. Bawdy Creek at US 70 Bus\Structures\411_025_C02_W5107_SMU_CU5.dgn