DocuSign Envelope ID: 697BD2C9-C5FC-4A21-B1D8-89A5640C220C

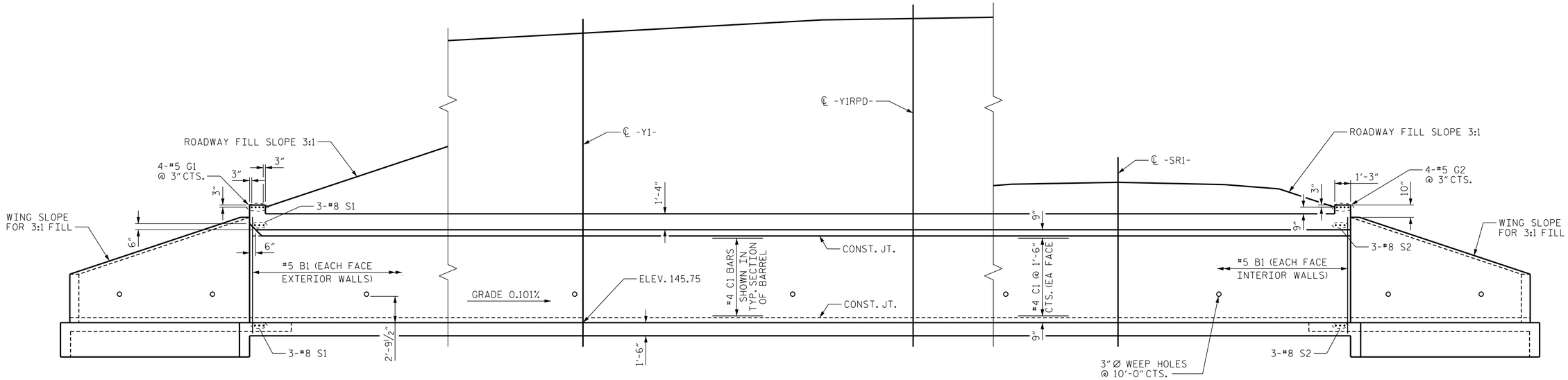

EXTERIOR WALL

INTERIOR WALL

CULVERT SECTION NORMAL TO ROADWAY

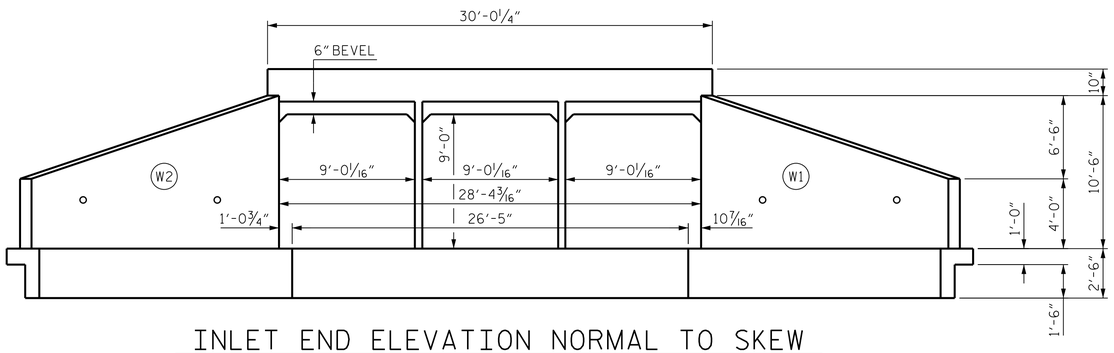

INLET END ELEVATION NORMAL TO SKEW

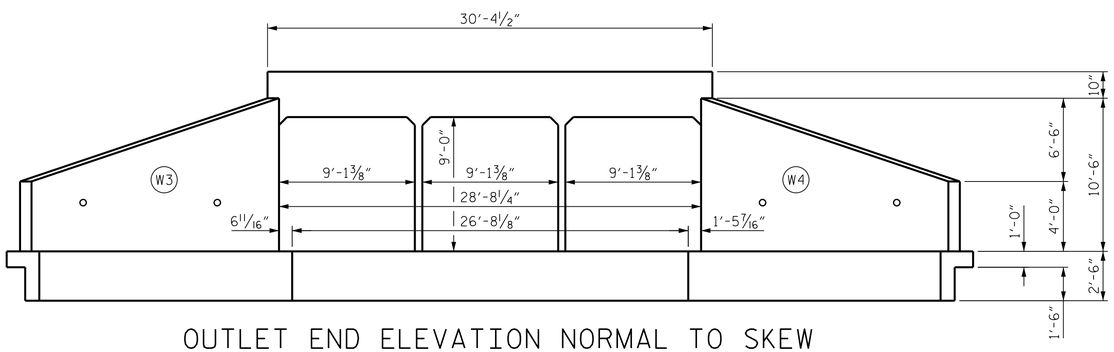

OUTLET END ELEVATION NORMAL TO SKEW

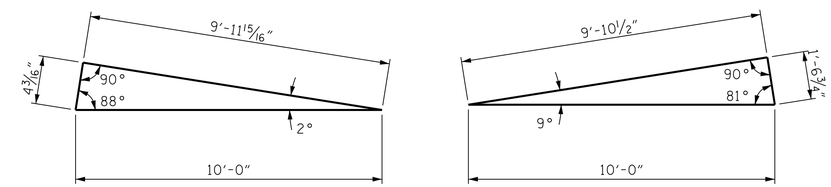

INLET END

OUTLET END

SKEW TRIANGLES

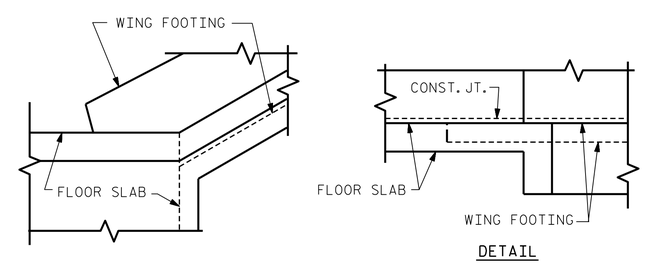

DETAIL

CONNECTION OF WING FOOTING AND FLOOR SLAB WHEN SLAB IS THICKER THAN FOOTING

I HEREBY CERTIFY THESE PLANS ARE THE AS-BUILT PLANS

PROJECT NO. W-5107

JOHNSTON COUNTY

STATION: 24+31.50 -Y1-

SHEET 2 OF 9

STATE OF NORTH CAROLINA
DEPARTMENT OF TRANSPORTATION
RALEIGH

TRIPLE 9 FT. X 9 FT. CONCRETE BOX CULVERT

NORTH CAROLINA PROFESSIONAL SEAL 027799 ENGINEER PAUL A. de PAOLI

11/20/2014

DRAWN BY : J.S. ISRAELNAIM DATE : 05/14
CHECKED BY : P.A. de PAOLI DATE : 06/14
DESIGN ENGINEER OF RECORD : P.A. de PAOLI DATE : 06/14

MI ENGINEERING
1011 SCHAUB DRIVE, SUITE 100
RALEIGH, NC 27606
(919) 851-6606
FIRM PE NUMBER : P-0671

REVISIONS								SHEET NO.
NO.	BY:	DATE:	NO.	BY:	DATE:			C-9
1			3					TOTAL SHEETS
2			4					36

11/20/2014
10:13:21 AM
User: blanning
Filename: P:\NC Bridges\MI2005 - W-5107 Johnston Co\MI2005_04_Culvert 2_New_ Bawdy Creek at US 70 Bus\Structures\411_010_C02_W5107_SMU_CU2.dgn