DocuSign Envelope ID: 8FF6719D-7D19-48C1-9FDC-0403973C721B

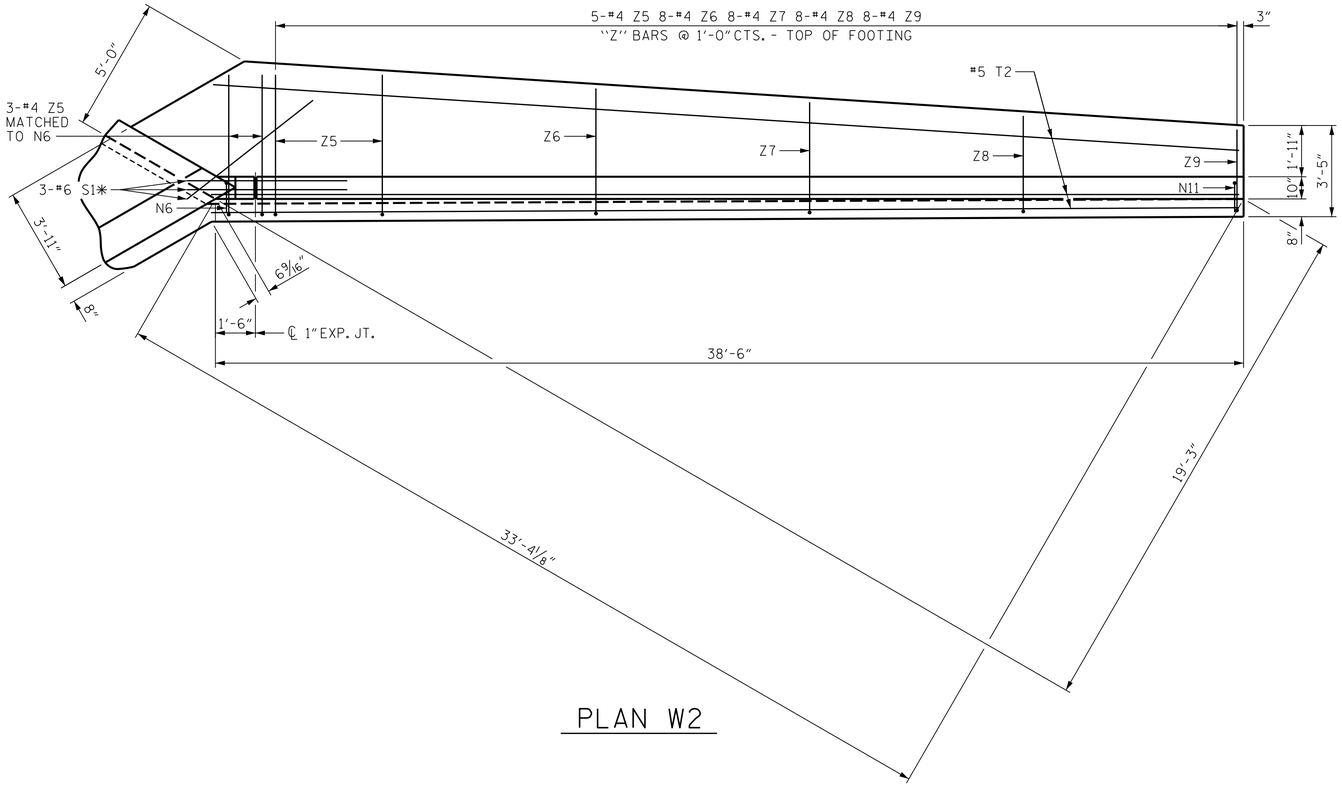

PLAN W2

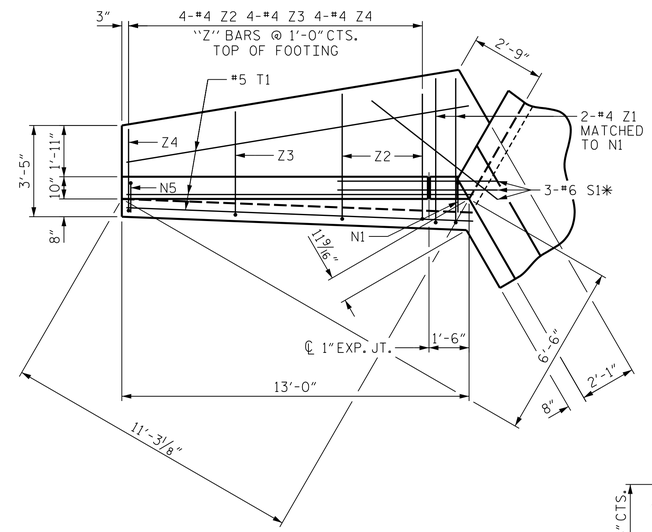

PLAN W1

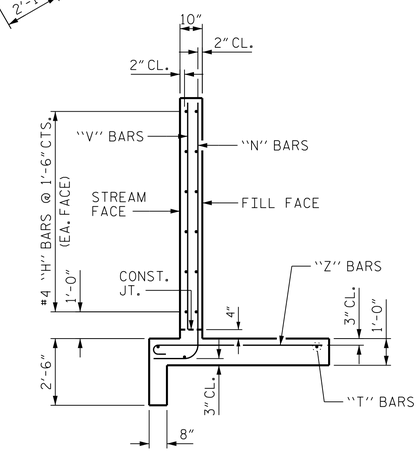

TYPICAL WING SECTION

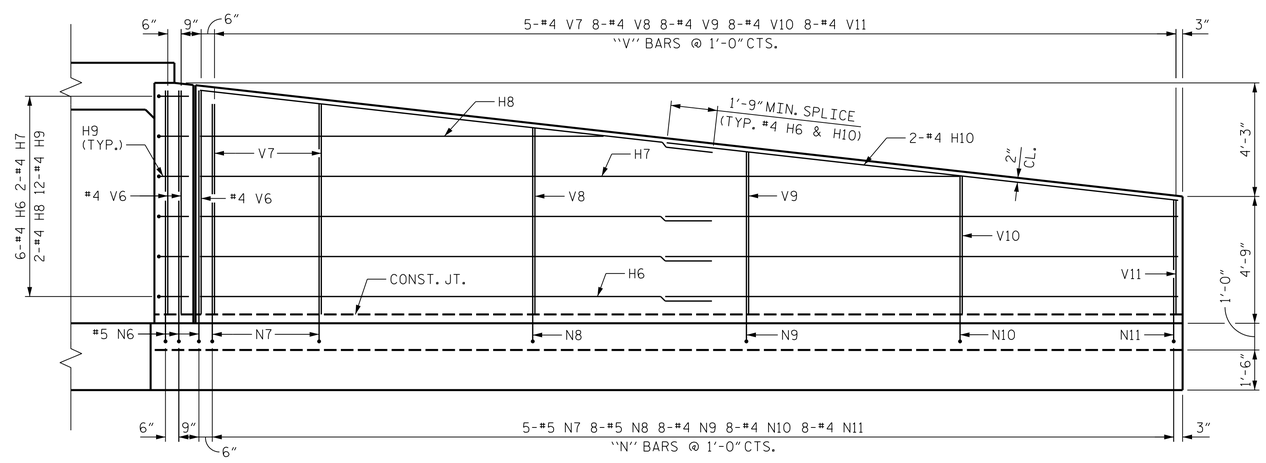

ELEVATION W2

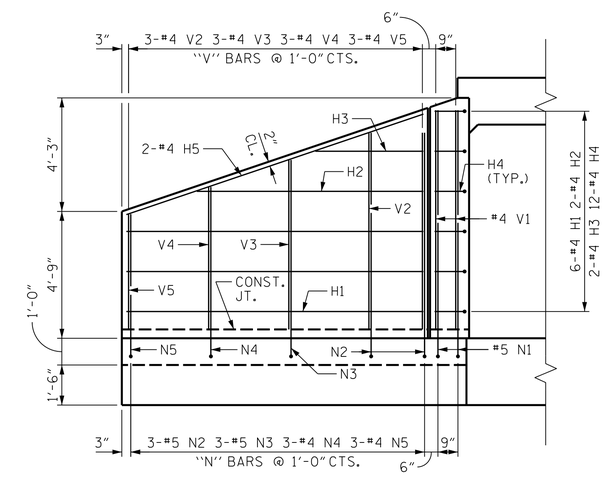

ELEVATION W1

PROJECT NO. W-5107

JOHNSTON COUNTY

STATION: 26+51.38 -L-

SHEET 5 OF 7

STATE OF NORTH CAROLINA
DEPARTMENT OF TRANSPORTATION
RALEIGH

WINGS FOR CONCRETE BOX CULVERT

H = 8'-0" SLOPE = 3:1

NORTH CAROLINA PROFESSIONAL SEAL 027799 ENGINEER PAUL A. de PAOLI

11/20/2014

DRAWN BY : J.S. ISRAELNAIM DATE : 07/14
CHECKED BY : P.A. de PAOLI DATE : 07/14
DESIGN ENGINEER OF RECORD : P.A. de PAOLI DATE : 07/14

MI ENGINEERING
1011 SCHAUB DRIVE, SUITE 100
RALEIGH, NC 27606
(919) 851-6606
FIRM PE NUMBER : P-0671

REVISIONS								SHEET NO.
NO.	BY:	DATE:	NO.	BY:	DATE:			C-5
1			3					TOTAL SHEETS
2			4					36

11/19/2014
4:55:46 PM
User: blanning
Filename: P:\NC Bridges\MI2005 - W-5107 Johnston Co\MI2005.03_Culvert 1_Ext_Bowdy Creek at US 70 Byp\Structures\410_025_C01_W5107_SMU_CU5.dgn