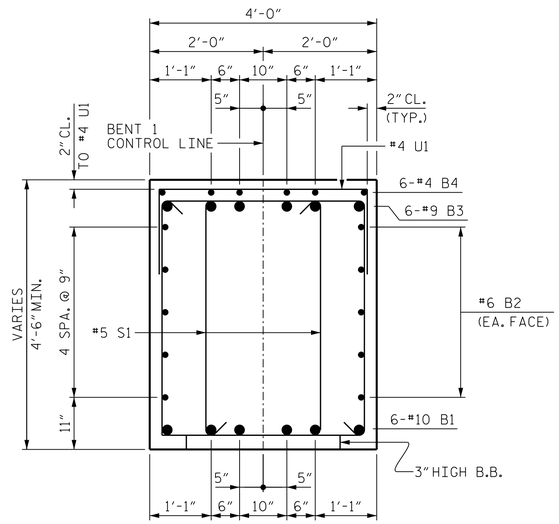

SECTION A-A

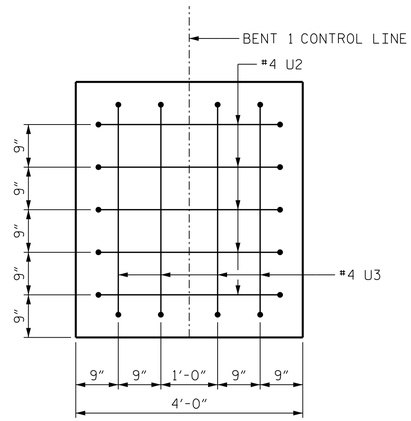

VIEW B-B

BAR TYPES

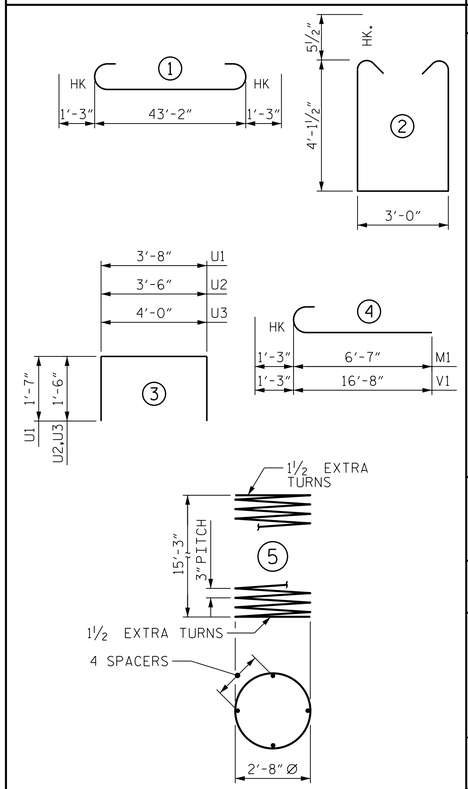

ALL BAR DIMENSIONS ARE OUT TO OUT.

BILL OF MATERIAL

BENT 1

BAR	NO.	SIZE	TYPE	LENGTH	WEIGHT
B1	6	#10	STR	43'-2"	1114
B2	10	#6	STR	43'-2"	648
B3	6	#9	1	45'-8"	932
B4	6	#4	STR	13'-7"	54
M1	36	#9	4	7'-10"	959
S1	120	#5	2	12'-2"	1523
T1	48	#6	STR	6'-9"	487
T1	90	#7	STR	6'-9"	1242
U1	44	#4	3	6'-10"	201
U2	10	#4	3	6'-6"	43
U3	8	#4	3	7'-0"	37
V1	36	#9	4	17'-11"	2193

REINFORCING STEEL 9433 LBS.

BAR	NO.	SIZE	TYPE	LENGTH	WEIGHT
SP-1	3	*	5	528'-0"	1058

SPIRAL COLUMN REINFORCING STEEL 1058 LBS.

* THE SP-1 SPIRAL REINFORCING STEEL SHALL BE W20 OR D-20 COLD DRAWN WIRE OR #4 PLAIN OR DEFORMED BAR.

CLASS A CONCRETE BREAKDOWN

POUR #1 (FOOTINGS)	17.6	C.Y.
POUR #2 (COLUMNS)	11.8	C.Y.
POUR #3 (CAP)	30.1	C.Y.
TOTAL	59.5	C.Y.

HP 14 x 73 STEEL PILES NO. 12 120.0 LIN. FT.

STEEL PILE POINTS 12

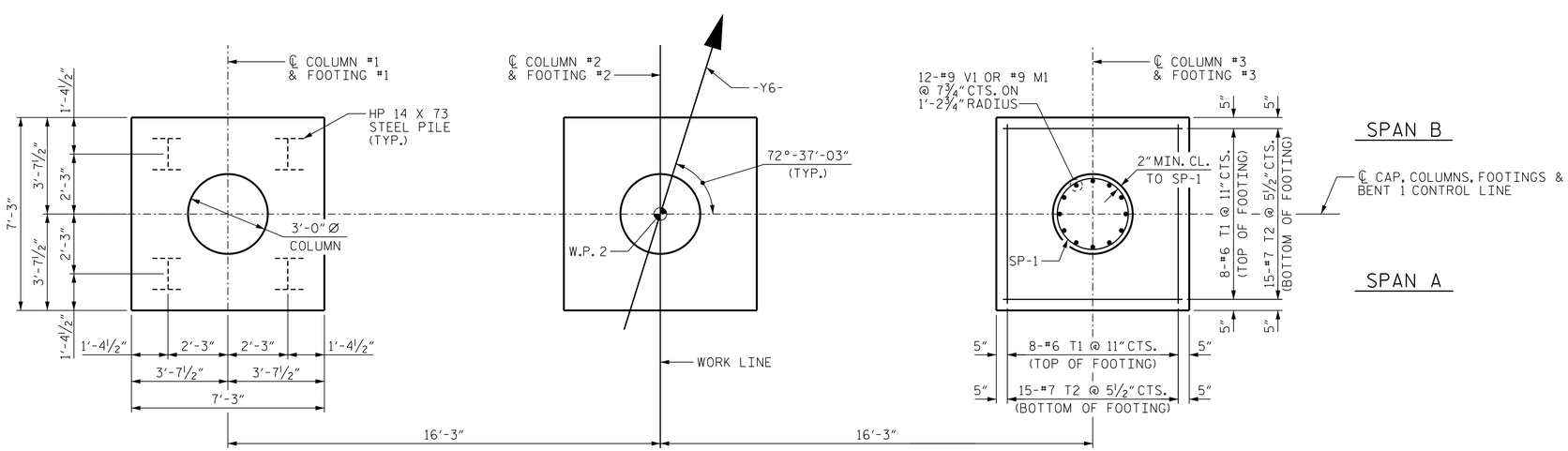

PLAN OF COLUMNS AND FOOTINGS

(DIMENSIONS AND REINFORCING STEEL ARE TYPICAL FOR EACH COLUMN AND FOOTING)

PROJECT NO. W-5107

JOHNSTON COUNTY

STATION: 115+83.99 -L-

SHEET 2 OF 2

STATE OF NORTH CAROLINA
DEPARTMENT OF TRANSPORTATION
RALEIGH

SUBSTRUCTURE

BENT 1

NORTH CAROLINA PROFESSIONAL SEAL 027799 ENGINEER ALLYSON K. ORR

11/26/2014

MI ENGINEERING
1011 SCHAUB DRIVE, SUITE 100
RALEIGH, NC 27606
(919) 851-6606
FIRM PE NUMBER : P-0671

REVISIONS						
NO.	BY:	DATE:	NO.	BY:	DATE:	
1			3			
2			4			

SHEET NO. S-64

TOTAL SHEETS 70

DRAWN BY : B.E. LANNING DATE : 10/14
CHECKED BY : G.R. COLS DATE : 10/14
DESIGN ENGINEER OF RECORD : A.K. ORR DATE : 11/14

11/25/2014
2:37:27 PM
User: blanning
Filename: P:\NC Bridges\MI2005 - W-5107 Johnston Co\MI2005.02.Site 2\Structures\402.120.S02.W5107.SMU.BIB.dgn