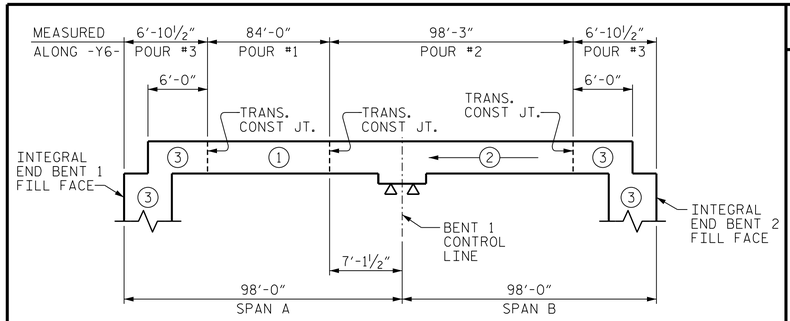

POURING SEQUENCE

(#) INDICATES POUR NUMBER AND DIRECTION OF POUR

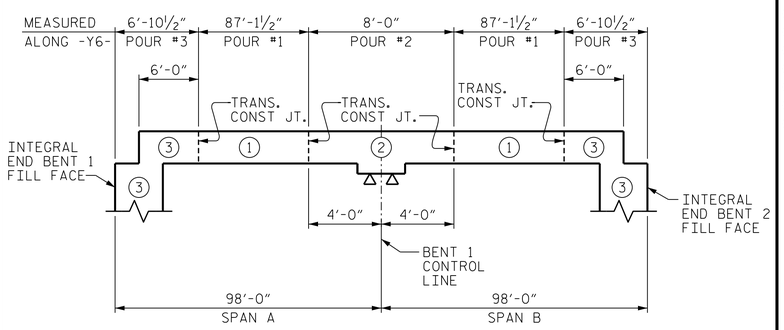

OPTIONAL POURING SEQUENCE

POUR (2) SHALL NOT BE STARTED UNTIL BOTH ADJACENT (1) POURS REACH A MINIMUM OF 3,000 PSI.

REINFORCING BAR SCHEDULE

BAR	NO.	SIZE	TYPE	LENGTH	WEIGHT
* A1	334	#5	STR	42'-11"	14951
A2	334	#5	STR	42'-11"	14951
* A101	2	#5	STR	41'-4"	86
* A102	2	#5	STR	39'-7"	83
* A103	2	#5	STR	37'-10"	79
* A104	2	#5	STR	36'-1"	75
* A105	2	#5	STR	34'-4"	72
* A106	2	#5	STR	32'-8"	68
* A107	2	#5	STR	30'-11"	64
* A108	2	#5	STR	29'-2"	61
* A109	2	#5	STR	27'-5"	57
* A110	2	#5	STR	25'-9"	54
* A111	2	#5	STR	24'-0"	50
* A112	2	#5	STR	22'-3"	46
* A113	2	#5	STR	20'-6"	43
* A114	2	#5	STR	18'-10"	39
* A115	2	#5	STR	17'-1"	36
* A116	2	#5	STR	15'-4"	32
* A117	2	#5	STR	13'-7"	28
* A118	2	#5	STR	11'-11"	25
* A119	2	#5	STR	10'-2"	21
* A120	2	#5	STR	8'-5"	18
* A121	2	#5	STR	6'-8"	14
* A122	2	#5	STR	5'-0"	10
* A123	2	#5	STR	3'-3"	7
A201	2	#5	STR	41'-4"	86
A202	2	#5	STR	39'-7"	83
A203	2	#5	STR	37'-10"	79
A204	2	#5	STR	36'-1"	75
A205	2	#5	STR	34'-4"	72
A206	2	#5	STR	32'-8"	68
A207	2	#5	STR	30'-11"	64
A208	2	#5	STR	29'-2"	61
A209	2	#5	STR	27'-5"	57
A210	2	#5	STR	25'-9"	54
A211	2	#5	STR	24'-0"	50
A212	2	#5	STR	22'-3"	46
A213	2	#5	STR	20'-6"	43
A214	2	#5	STR	18'-10"	39
A215	2	#5	STR	17'-1"	36
A216	2	#5	STR	15'-4"	32
A217	2	#5	STR	13'-7"	28
A218	2	#5	STR	11'-11"	25
A219	2	#5	STR	10'-2"	21
A220	2	#5	STR	8'-5"	18
A221	2	#5	STR	6'-8"	14
A222	2	#5	STR	5'-0"	10
A223	2	#5	STR	3'-3"	7

BAR	NO.	SIZE	TYPE	LENGTH	WEIGHT
* B1	138	#6	STR	19'-6"	4042
* B2	140	#4	STR	24'-6"	2291
* B3	35	#7	STR	14'-3"	1019
* B4	35	#7	STR	60'-0"	4292
* B5	68	#7	STR	32'-6"	4517
B6	208	#5	STR	50'-2"	10883
H1	11	#5	STR	16'-7"	190
H2	11	#5	STR	16'-10"	193
H3	22	#5	STR	16'-0"	367
H4	22	#5	STR	15'-9"	361
H5	11	#5	STR	16'-4"	187
H6	11	#5	STR	16'-1"	185
K1	20	#4	STR	26'-7"	355
K2	8	#4	STR	6'-11"	37
K3	16	#4	STR	8'-0"	86
K4	32	#4	STR	8'-6"	182
K5	16	#4	STR	7'-6"	80
K6	4	#4	STR	5'-1"	14
K7	4	#4	STR	5'-8"	15
K8	8	#4	STR	5'-11"	32
K9	4	#4	STR	5'-4"	14
K10	16	#4	STR	2'-9"	29
K11	8	#4	STR	5'-8"	30
K12	10	#4	1	6'-3"	42
K13	15	#4	2	12'-1"	121
* S1	64	#4	3	10'-8"	456
* S2	64	#4	3	11'-11"	509
S3	120	#4	4	2'-9"	220
U1	68	#4	5	11'-8"	530
U2	12	#4	5	13'-8"	110
U3	8	#4	6	13'-4"	71
U4	24	#4	6	14'-8"	235

* EPOXY COATED REINFORCING STEEL LBS. 33,145

REINFORCING STEEL LBS. 30,588

BAR TYPES

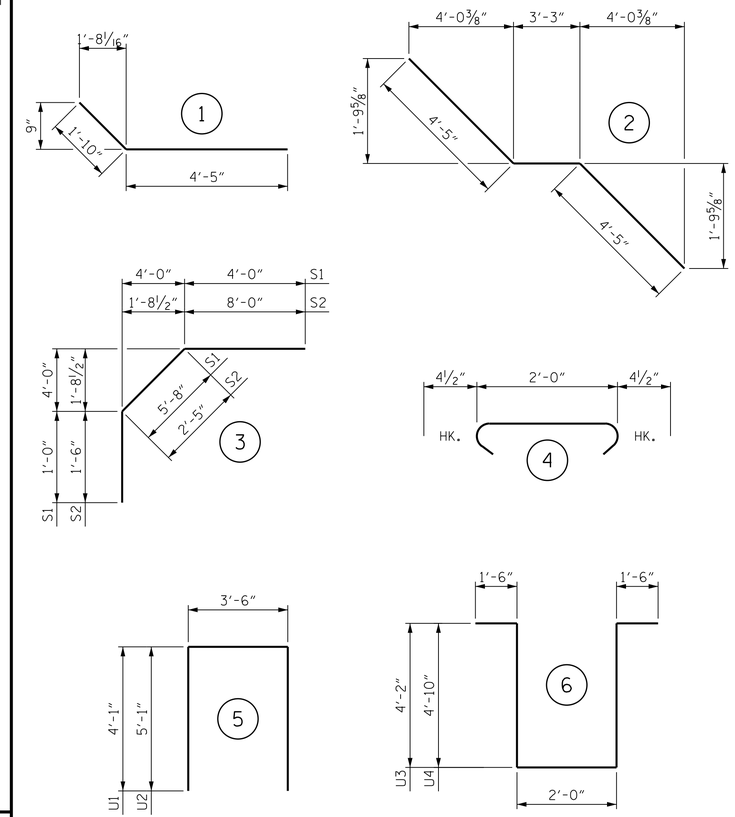

ALL BAR DIMENSIONS ARE OUT TO OUT.

SUPERSTRUCTURE BILL OF MATERIAL

	CLASS AA CONCRETE	REINFORCING STEEL	EPOXY COATED REINFORCING STEEL
	(CU. YDS.)	(LBS.)	(LBS.)
POUR #1	114.5	-	-
POUR #2	148.4	-	-
POUR #3	90.9	-	-
TOTALS**	353.8	30,588	33,145

**QUANTITIES FOR BARRIER RAIL ARE NOT INCLUDED

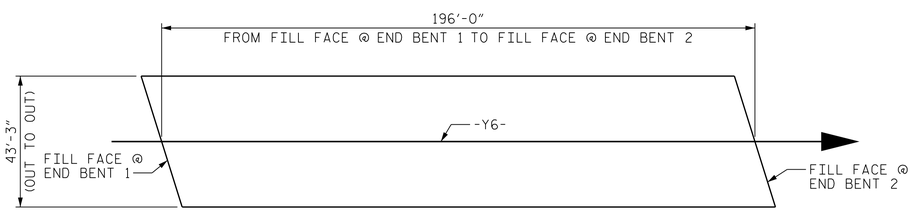

LAYOUT FOR COMPUTING AREA REINFORCED CONCRETE DECK SLAB (SQ. FT. = 8477)

GROOVING BRIDGE FLOORS

APPROACH SLABS	1046 SQ.FT.
BRIDGE DECK	7175 SQ.FT.
TOTAL	8221 SQ.FT.

SUPERSTRUCTURE REINFORCING STEEL LENGTHS ARE BASED ON THE FOLLOWING MINIMUM SPLICE LENGTHS

BAR SIZE	SUPERSTRUCTURE EXCEPT APPROACH SLABS, PARAPET, AND BARRIER RAIL		APPROACH SLABS		PARAPET AND BARRIER RAIL
	EPOXY COATED	UNCOATED	EPOXY COATED	UNCOATED	
#4	2'-0"	1'-9"	2'-0"	1'-9"	2'-9"
#5	2'-6"	2'-2"	2'-6"	2'-2"	3'-5"
#6	3'-0"	2'-7"	3'-10"	2'-7"	4'-4"
#7	5'-3"	3'-6"			
#8	6'-10"	4'-7"			

PROJECT NO. W-5107

JOHNSTON COUNTY

STATION: 115+83.99 -L-

STATE OF NORTH CAROLINA
DEPARTMENT OF TRANSPORTATION
RALEIGH

STANDARD
SUPERSTRUCTURE BILL OF MATERIAL

NORTH CAROLINA PROFESSIONAL SEAL 027799 ENGINEER ALLYSON K. ORR
11/26/2014

MI ENGINEERING
1011 SCHAUB DRIVE, SUITE 100
RALEIGH, NC 27606
(919) 851-6606
FIRM PE NUMBER : P-0671

REVISIONS						SHEET NO.
NO.	BY:	DATE:	NO.	BY:	DATE:	S-59
1			3			TOTAL SHEETS
2			4			70

STD. NO. BOM2

ASSEMBLED BY:	B.E. LANNING	DATE:	03/13
CHECKED BY :	A.K. ORR	DATE:	04/13
DESIGN ENGINEER OF RECORD:	A.K. ORR	DATE:	11/14

DRAWN BY :	JMB	5/87	
CHECKED BY :	SJD	9/87	
REV. 8/16/99	RWW/LES		
REV. 5/1/06	TLA/GM		
REV. 10/1/11	MAA/GM		

11/25/2014
2:37:17 PM
User: blanning
Filename: P:\NC Bridges\MI2005 - W-5107 Johnston Co\MI2005.02.Site 2\Structures\402.095.S02.W5107.SMU.BOMI.dgn