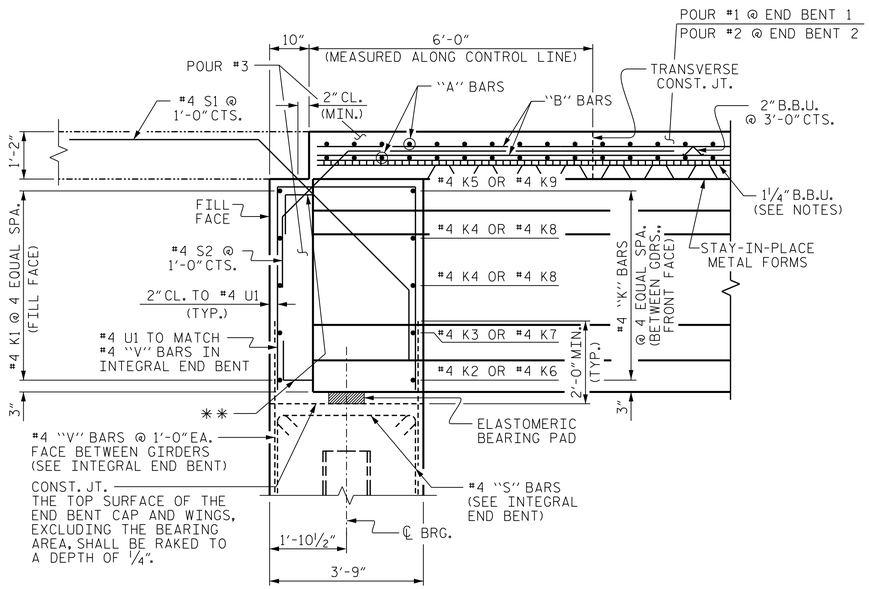

END OF GIRDER DETAIL AT INTEGRAL END BENT

** #5 "S" BARS (TYP.) (SEE GIRDER SHEETS)

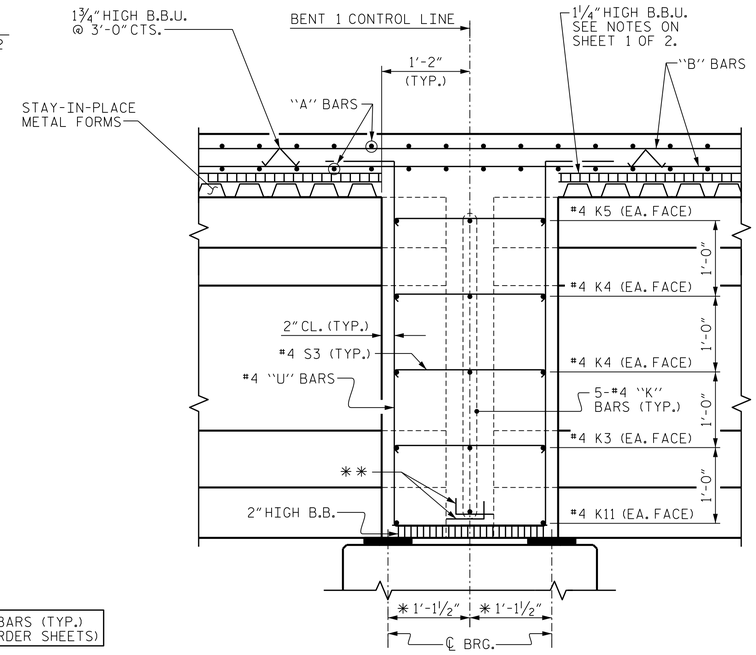

SECTION A-A

* MEASURED ALONG ℄ GIRDER

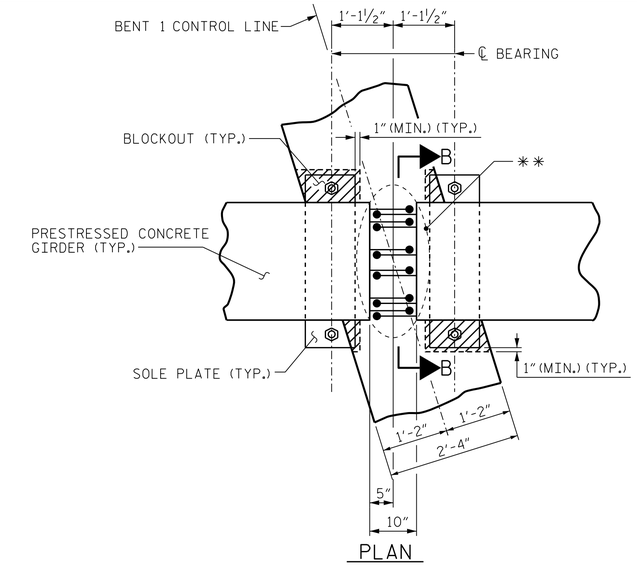

PLAN

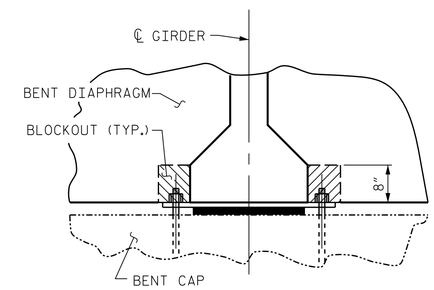

SECTION B-B

BENT DIAPHRAGM BLOCK-OUT DETAIL

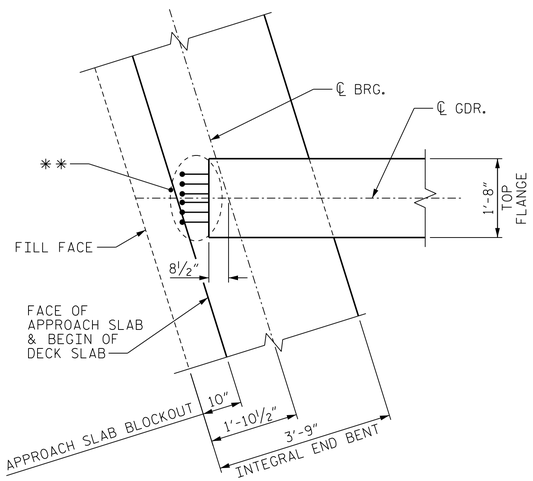

PLAN OF GIRDER AT INTEGRAL END BENT

(END BENT 1 SHOWN, END BENT 2 SIMILAR)

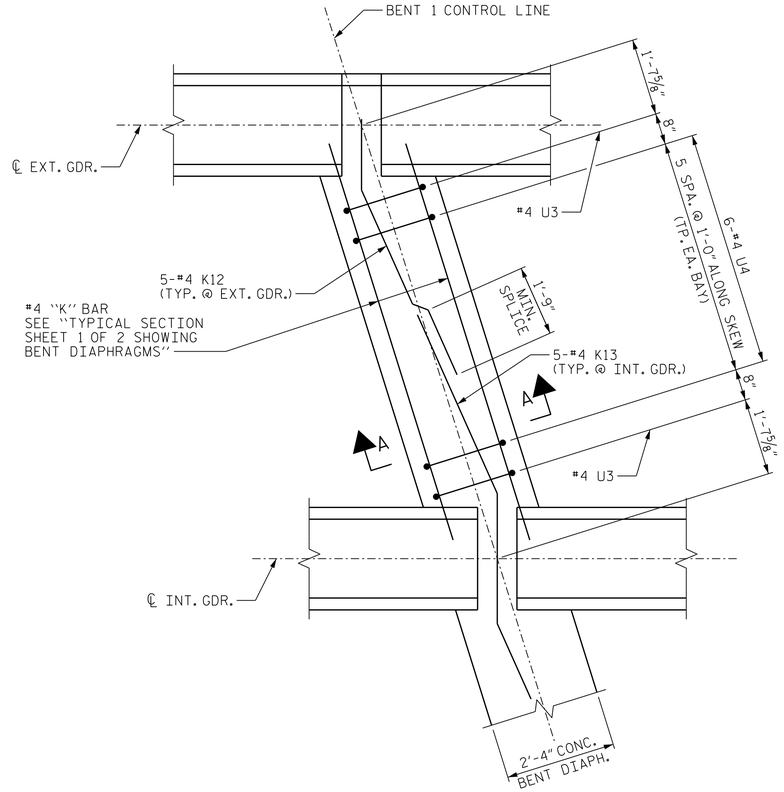

PLAN OF BENT DIAPHRAGM

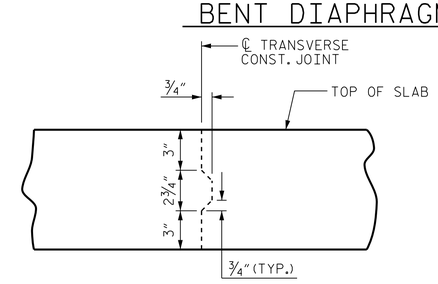

TRANSVERSE CONSTRUCTION JOINT DETAIL

NOTE: REINFORCING STEEL IN SLAB NOT SHOWN. LONGITUDINAL REINFORCING STEEL SHALL BE CONTINUOUS THRU JOINT.

PROJECT NO. W-5107
JOHNSTON COUNTY
STATION: 115+83.99 -L-

SHEET 2 OF 2

STATE OF NORTH CAROLINA
DEPARTMENT OF TRANSPORTATION
RALEIGH

SUPERSTRUCTURE
TYPICAL SECTION DETAILS

NORTH CAROLINA PROFESSIONAL SEAL 027799 ENGINEER ALLYSON K. ORR
11/26/2014

MI ENGINEERING
1011 SCHAUB DRIVE, SUITE 100
RALEIGH, NC 27606
(919) 851-6606
FIRM PE NUMBER : P-0671

REVISIONS								SHEET NO.
NO.	BY:	DATE:	NO.	BY:	DATE:			S-46
1			3					TOTAL SHEETS
2			4					70

DRAWN BY :	B.E. LANNING	DATE :	03/13
CHECKED BY :	A.K. ORR	DATE :	03/13
DESIGN ENGINEER OF RECORD :	A.K. ORR	DATE :	11/14

11/25/2014
2:36:31 PM
User: blanning
Filename: P:\NC Bridges\MI2005 - W-5107 Johnston Co\MI2005_02_Site 2\Structures\402_030_S02_W5107_SMU_TS2.dgn