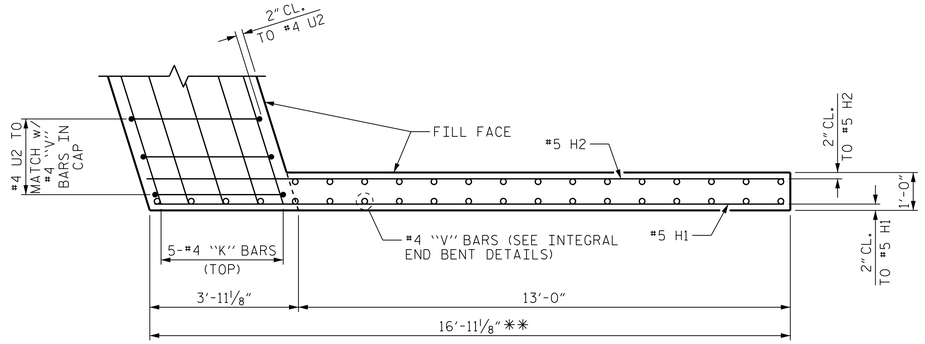

PLAN OF WING (W1)

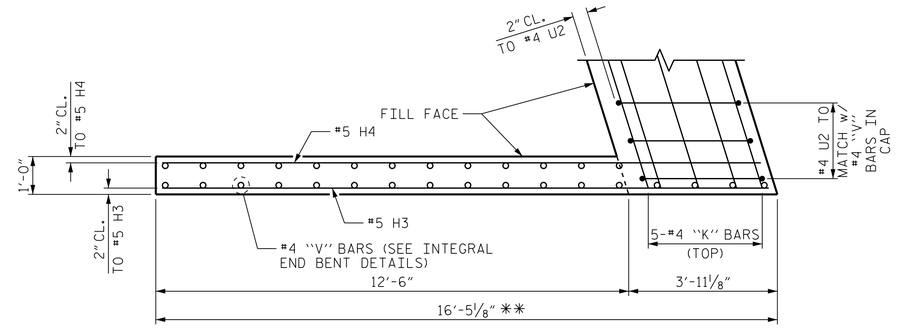

PLAN OF WING (W2)

** SEE SPECIAL PROVISIONS FOR APPLICATION OF BRIDGE COATING.

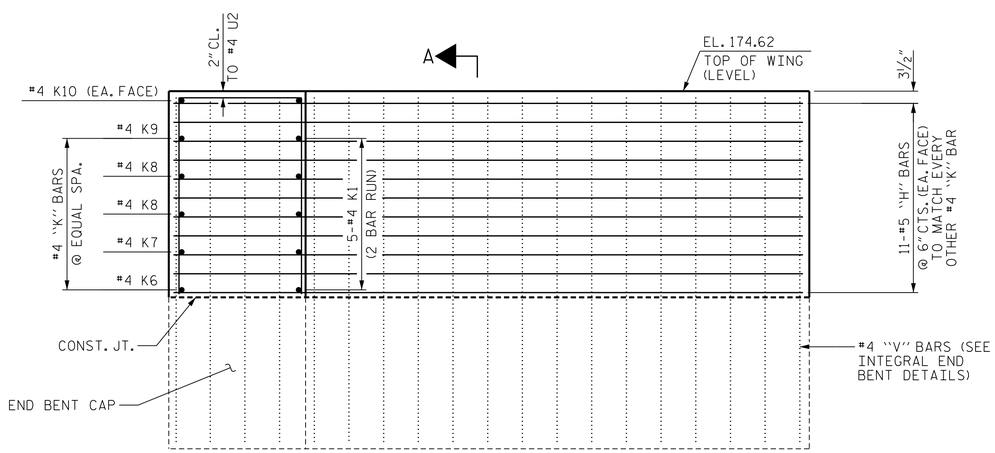

ELEVATION OF WING (W1)

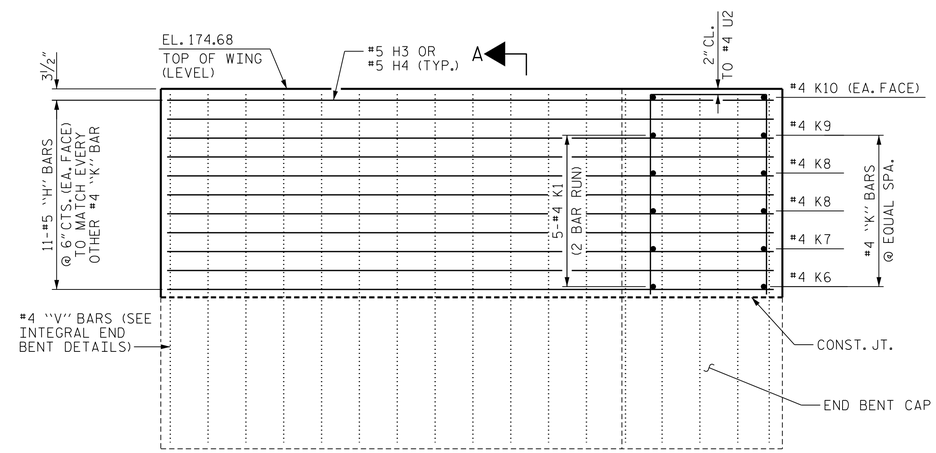

ELEVATION OF WING (W2)

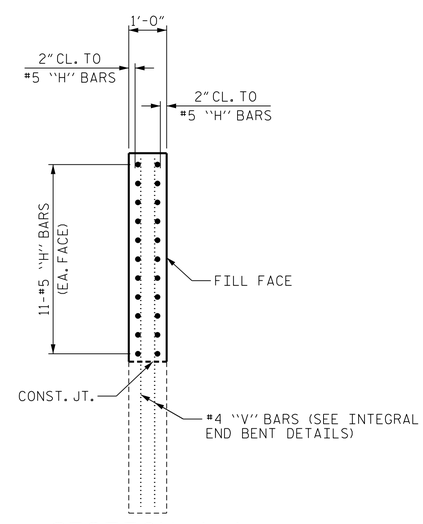

SECTION A-A

NOTE: LOWER PORTION OF WINGS BUILT WITH INTEGRAL END BENTS. FOR DETAILS AND REINFORCING STEEL, SEE INTEGRAL END BENT SHEETS.

PROJECT NO. W-5107

JOHNSTON COUNTY

STATION: 115+83.99 -L-

SHEET 4 OF 5

STATE OF NORTH CAROLINA
DEPARTMENT OF TRANSPORTATION
RALEIGH

SUPERSTRUCTURE

PLAN OF SPANS
WING DETAILS
END BENT 1

NORTH CAROLINA PROFESSIONAL SEAL 027799 ENGINEER ALLYSON K. ORR
11/26/2014

MI ENGINEERING
1011 SCHAUB DRIVE, SUITE 100
RALEIGH, NC 27606
(919) 851-6606
FIRM PE NUMBER : P-0671

REVISIONS						
NO.	BY:	DATE:	NO.	BY:	DATE:	
1			3			
2			4			

SHEET NO. S-50
TOTAL SHEETS 70

DRAWN BY : B.E. LANNING DATE : 03/13
CHECKED BY : A. K. ORR DATE : 04/13
DESIGN ENGINEER OF RECORD : A.K. ORR DATE : 11/14

11/25/2014
2:36:39 PM
User: blanning
Filename: P:\NC Bridges\MI2005 - W-5107 Johnston Co\MI2005.02.Site 2\Structures\402.050.S02.W5107.SMU.PS4.dgn