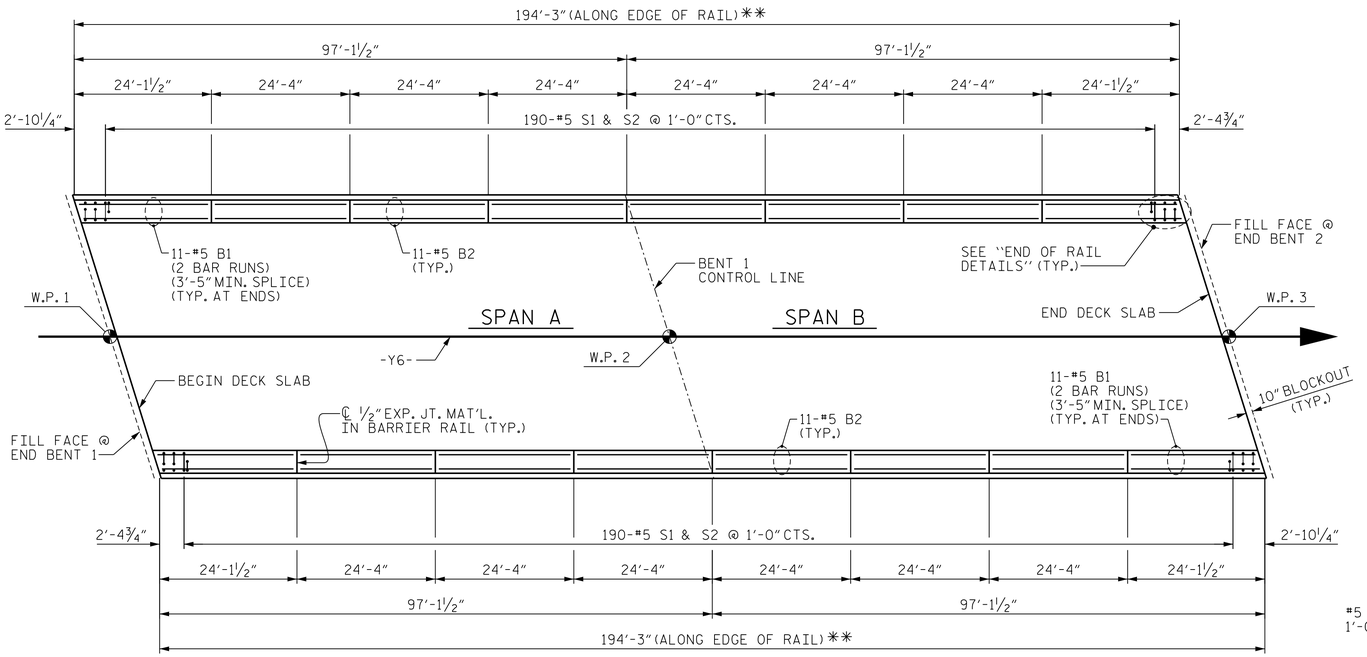

PLAN OF BARRIER RAIL

NOTES

THE BARRIER RAIL IN EACH SPAN SHALL NOT BE CAST UNTIL ALL SLAB CONCRETE IN THAT SPAN HAS BEEN CAST AND HAS REACHED A MINIMUM COMPRESSIVE STRENGTH OF 3,000 PSI.

ALL REINFORCING STEEL IN BARRIER RAILS SHALL BE EPOXY COATED.

GROOVED CONTRACTION JOINTS, ½" IN DEPTH, SHALL BE TOOLED IN ALL EXPOSED FACES OF THE BARRIER RAIL AND IN ACCORDANCE WITH ARTICLE 825-10(B) OF THE STANDARD SPECIFICATIONS. THE CONTRACTION JOINT SHALL BE LOCATED AT EACH THIRD POINT BETWEEN BARRIER RAIL EXPANSION JOINTS. ONLY ONE CONTRACTION JOINT IS REQUIRED AT MIDPOINT OF BARRIER RAIL SEGMENTS LESS THAN 20 FEET IN LENGTH AND NO CONTRACTION JOINTS ARE REQUIRED FOR THOSE SEGMENTS LESS THAN 10 FEET IN LENGTH.

** SEE SPECIAL PROVISIONS FOR APPLICATION OF BRIDGE COATING.

BAR TYPES

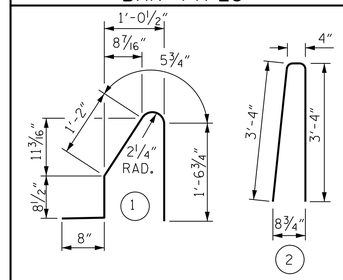

ALL BAR DIMENSIONS ARE OUT TO OUT.

BILL OF MATERIAL

FOR CONCRETE BARRIER RAIL ONLY

BAR	NO.	SIZE	TYPE	LENGTH	WEIGHT
* B1	88	#5	STR	13'-9"	1262
* B2	132	#5	STR	23'-11"	3293
* S1	388	#5	1	4'-7"	1855
* S2	380	#5	2	7'-0"	2774
* S3	16	#5	STR	2'-7"	43

* EPOXY COATED REINFORCING STEEL	9227 LBS.
CLASS AA CONCRETE	52.8 CU. YDS.
CONCRETE BARRIER RAIL	388.50 LIN. FT.

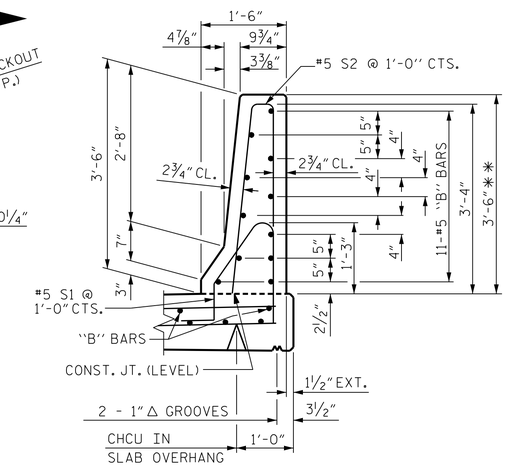

SECTION THRU RAIL

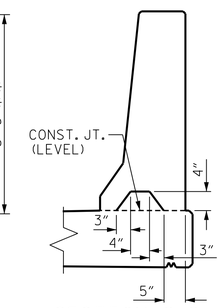

SECTION S-S

AT DAM IN OPEN JOINT (THIS IS TO BE USED ONLY WHEN SLIP FORM IS USED)

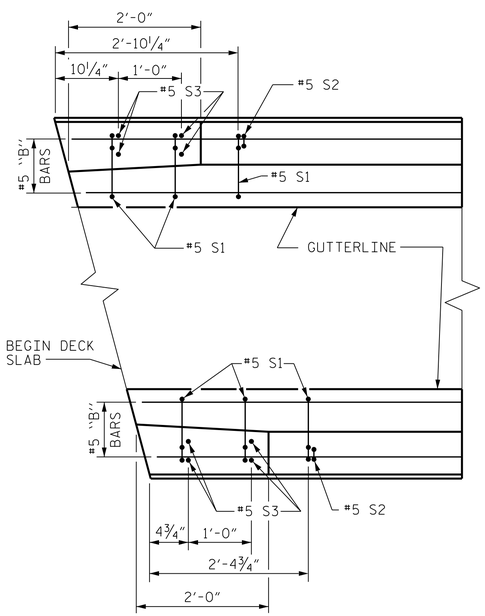

PLAN

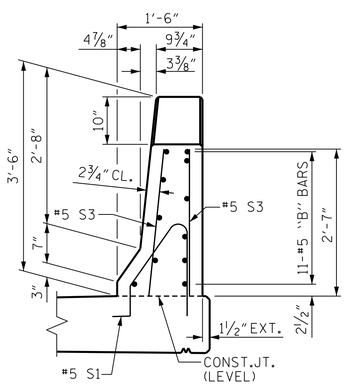

END VIEW

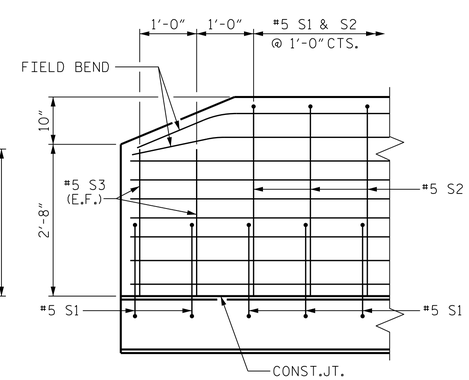

SIDE VIEW

END OF RAIL DETAILS

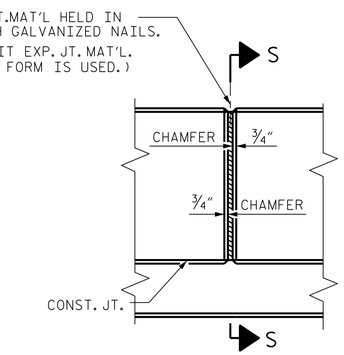

ELEVATION AT EXPANSION JOINTS

BARRIER RAIL DETAILS

PROJECT NO. W-5107

JOHNSTON COUNTY

STATION: 115+83.99 -L-

STATE OF NORTH CAROLINA
DEPARTMENT OF TRANSPORTATION
RALEIGH

STANDARD

CONCRETE BARRIER RAIL

NORTH CAROLINA PROFESSIONAL SEAL 027799 ENGINEER ALLYSON K. ORR
11/26/2014

ASSEMBLED BY:	J.S. ISRAELNAIM	DATE:	03/13
CHECKED BY :	A.K. ORR	DATE:	03/13
DESIGN ENGINEER OF RECORD:	A.K. ORR	DATE:	11/14

DRAWN BY : ARB 5/87	REV. 10/1/11	MAA/GM
CHECKED BY : SJD 9/87	REV. 7/12	MAA/GM
	REV. 6/13	MAA/GM

MI ENGINEERING
1011 SCHAUB DRIVE, SUITE 100
RALEIGH, NC 27606
(919) 851-6606
FIRM PE NUMBER : P-0671

REVISIONS						
NO.	BY:	DATE:	NO.	BY:	DATE:	
1			3			
2			4			

SHEET NO. S-57
TOTAL SHEETS 70

STD. NO. CBR1

11/25/2014
2:37:13 PM
User: blanning
Filename: P:\NC Bridges\MI2005 - W-5107 Johnston Co\MI2005.02.Site 2\Structures\402.085.S02.W5107.SMU.CBR1.dgn