NOTES

SEE SUPERSTRUCTURE SHEETS FOR UPPER PART OF INTEGRAL END BENT DETAILS.

FOR SECTION A-A, PILE SPLICE DETAILS AND TEMPORARY DRAINAGE DETAILS, SEE SHEET 3 OF 3.

THE CONTRACTOR'S ATTENTION IS CALLED TO THE FACT THAT THE UPPER PART OF THE END BENT WINGS ARE TO BE POURED WITH POUR #3 OF THE SUPERSTRUCTURE.

THE TOP SURFACE OF THE END BENT CAP, EXCEPT THE BEARING AREA, SHALL BE RAKED TO A DEPTH OF 1/4"

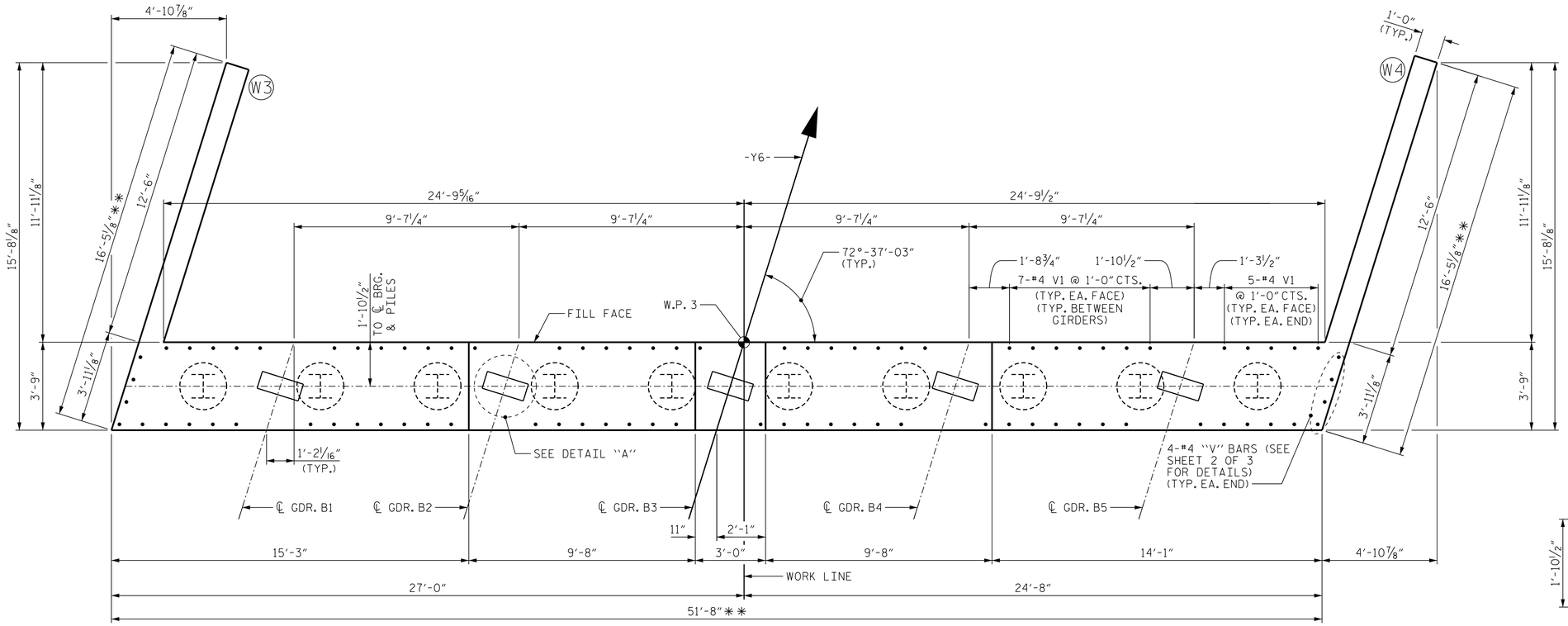

PLAN

** SEE SPECIAL PROVISIONS FOR APPLICATION OF BRIDGE COATING.

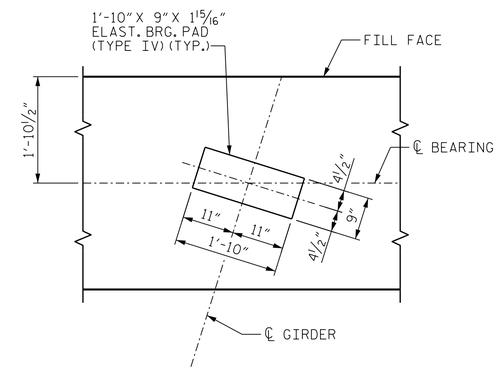

DETAIL "A"
(TYP. AT EACH GIRDER)

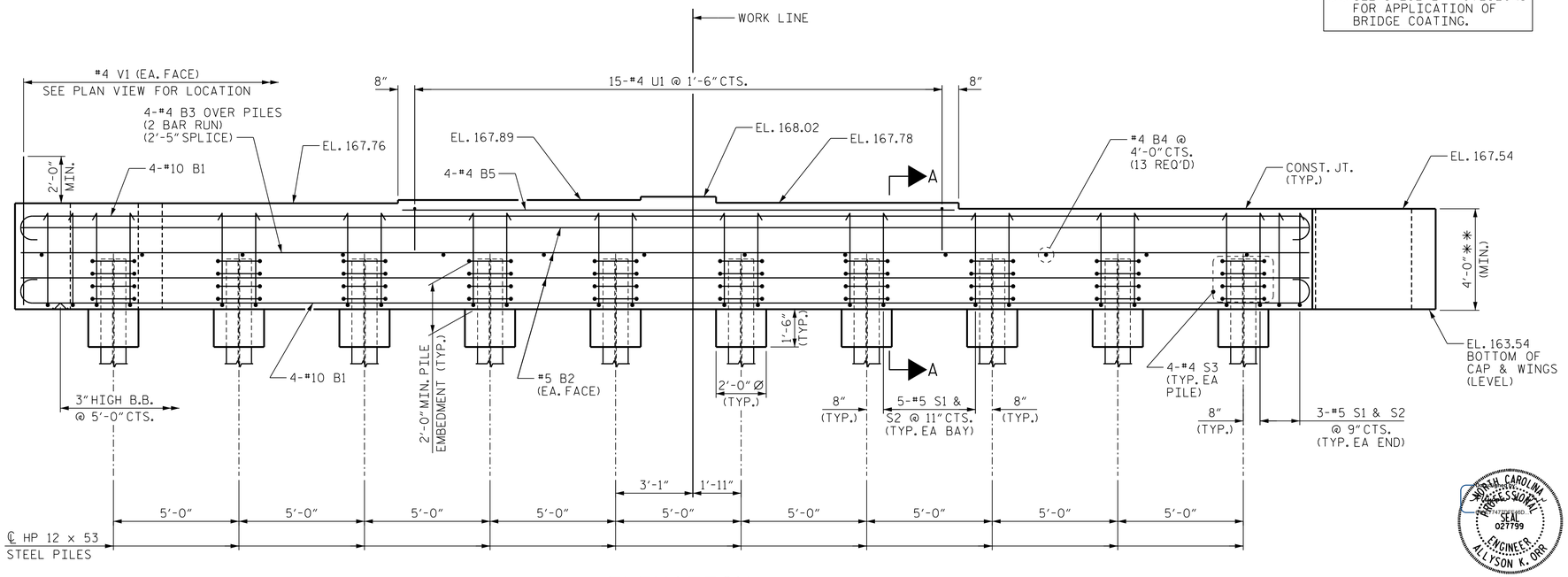

ELEVATION

PROJECT NO. W-5107

JOHNSTON COUNTY

STATION: 115+83.99 -L-

SHEET 1 OF 3

STATE OF NORTH CAROLINA
DEPARTMENT OF TRANSPORTATION
RALEIGH

SUBSTRUCTURE

INTEGRAL END BENT 2

NORTH CAROLINA PROFESSIONAL SEAL 027799 ENGINEER ALLYSON K. ORR
11/26/2014

MI ENGINEERING
1011 SCHAUB DRIVE, SUITE 100
RALEIGH, NC 27606
(919) 851-6606
FIRM PE NUMBER : P-0671

REVISIONS								SHEET NO.
NO.	BY:	DATE:	NO.	BY:	DATE:			S-65
1			3					TOTAL SHEETS
2			4					70

DRAWN BY : J.S. ISRAELNAIM DATE : 07/14
CHECKED BY : G.R. COLS DATE : 08/14
DESIGN ENGINEER OF RECORD : A.K. ORR DATE : 11/14

11/25/2014
2:37:29 PM
User: blanning
Filename: P:\NC Bridges\MI2005 - W-5107 Johnston Co\MI2005.02_Site 2\Structures\402.125.S02.W5107.SMU.E2A.dgn