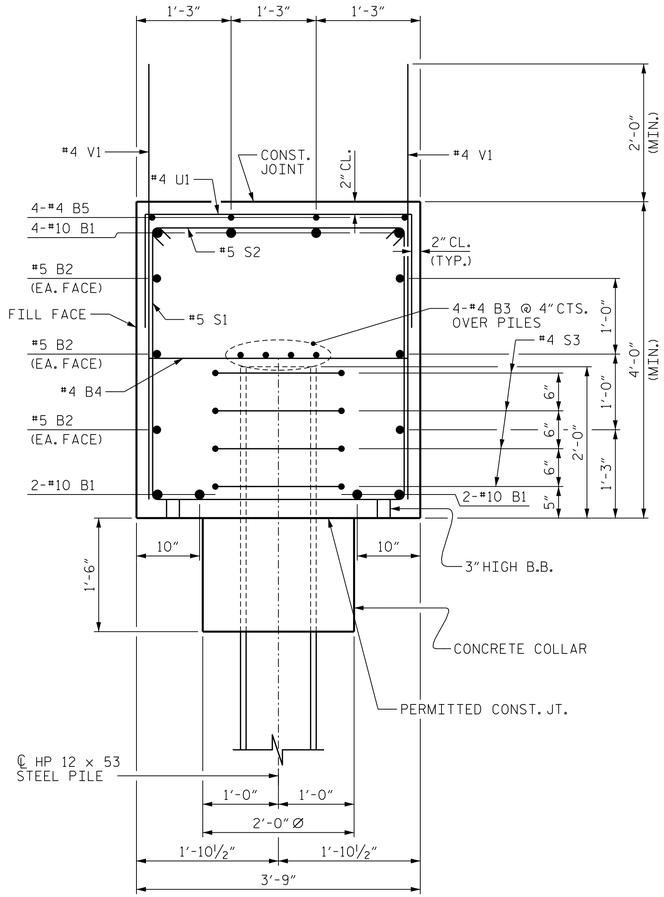

SECTION A-A

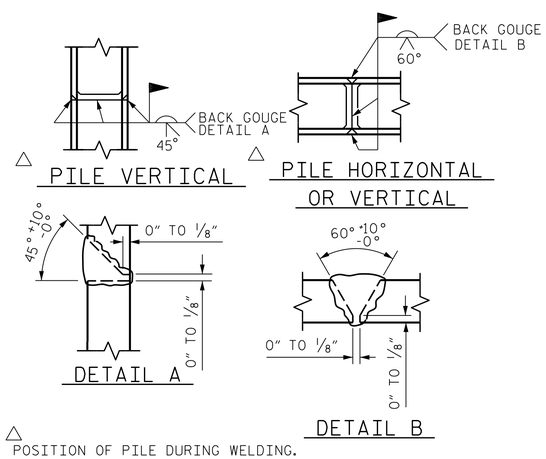

PILE SPLICE DETAILS

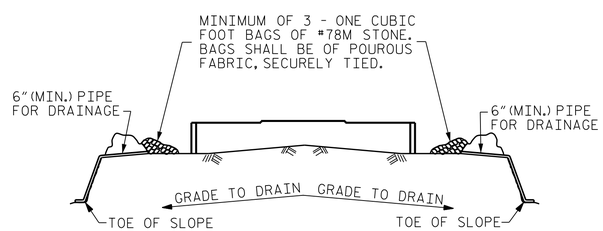

BAGGED STONE AND PIPE SHALL BE PLACED IMMEDIATELY AFTER COMPLETION OF END BENT EXCAVATION. PIPE MAY BE EITHER CONCRETE, CORRUGATED STEEL, CORRUGATED ALUMINUM ALLOY, OR CORRUGATED PLASTIC. PERFORATED PIPE WILL NOT BE ALLOWED.

BAGGED STONE SHALL REMAIN IN PLACE UNTIL THE ENGINEER DIRECTS THAT IT BE REMOVED. THE CONTRACTOR SHALL REMOVE AND DISPOSE OF SILT ACCUMULATIONS AT BAGGED STONE WHEN SO DIRECTED BY THE ENGINEER. BAGS SHALL BE REMOVED AND REPLACED WHENEVER THE ENGINEER DETERMINES THAT THEY HAVE DETERIORATED AND LOST THEIR EFFECTIVENESS.

NO SEPARATE PAYMENT WILL BE MADE FOR THIS WORK AND THE ENTIRE COST OF THIS WORK SHALL BE INCLUDED IN THE UNIT CONTRACT PRICE BID FOR THE SEVERAL PAY ITEMS.

TEMPORARY DRAINAGE AT END BENT

BAR TYPES

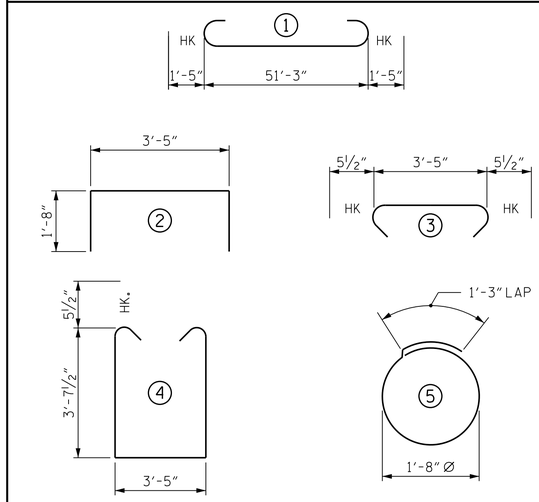

ALL BAR DIMENSIONS ARE OUT TO OUT.

BILL OF MATERIAL

END BENT 1

BAR	NO.	SIZE	TYPE	LENGTH	WEIGHT
B1	8	#10	1	54'-1"	1862
B2	6	#5	STR	51'-3"	321
B3	8	#4	STR	26'-11	144
B4	13	#4	STR	3'-5"	30
B5	4	#4	STR	2'-2"	6
H1	8	#5	STR	16'-7"	138
H2	8	#5	STR	16'-10"	140
H3	8	#5	STR	16'-0"	134
H4	8	#5	STR	15'-9"	131
S1	51	#5	4	11'-7"	616
S2	51	#5	3	4'-4"	231
S3	40	#4	5	6'-6"	174
U1	4	#4	2	6'-9"	18
V1	76	#4	STR	6'-3"	317
V2	34	#4	STR	9'-2"	208
V3	30	#4	STR	9'-3"	185

REINFORCING STEEL	4655 LBS.
CLASS A CONCRETE (CAP, LOWER WINGS & COLLARS	35.1 C.Y.
HP 12 x 53 STEEL PILES NO. 10	350 LIN. FT.
STEEL PILE POINTS	10 EACH

PROJECT NO. W-5107
JOHNSTON COUNTY
STATION: 115+83.99 -L-

SHEET 3 OF 3

STATE OF NORTH CAROLINA
DEPARTMENT OF TRANSPORTATION
RALEIGH

SUBSTRUCTURE

INTEGRAL END BENT 1

NORTH CAROLINA PROFESSIONAL SEAL 027799 ENGINEER ALLYSON K. ORR
11/26/2014

MI ENGINEERING
1011 SCHAUB DRIVE, SUITE 100
RALEIGH, NC 27606
(919) 851-6606
FIRM PE NUMBER : P-0671

REVISIONS						SHEET NO.
NO.	BY:	DATE:	NO.	BY:	DATE:	S-62
1			3			TOTAL SHEETS
2			4			70

DRAWN BY :	J.S. ISRAELNAIM	DATE :	07/14
CHECKED BY :	A.K. ORR	DATE :	07/14
DESIGN ENGINEER OF RECORD :	A.K. ORR	DATE :	11/14

11/25/2014
2:37:23 PM
User: blanning
Filename: P:\NC Bridges\MI2005 - W-5107 Johnston Co\MI2005.02.Site 2\Structures\402.110.S02.W5107.SMU.EIC.dgn