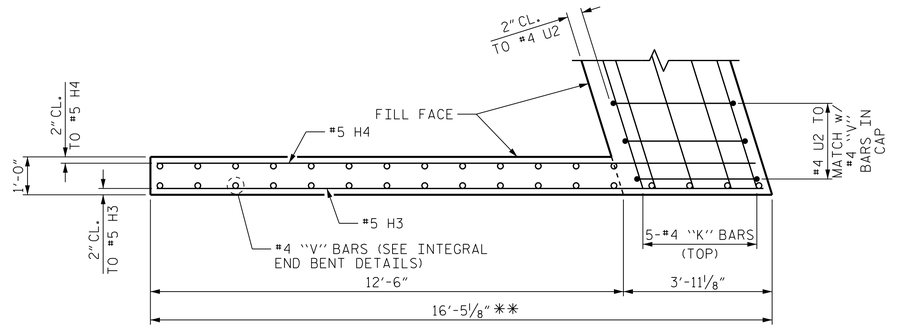

PLAN OF WING W3

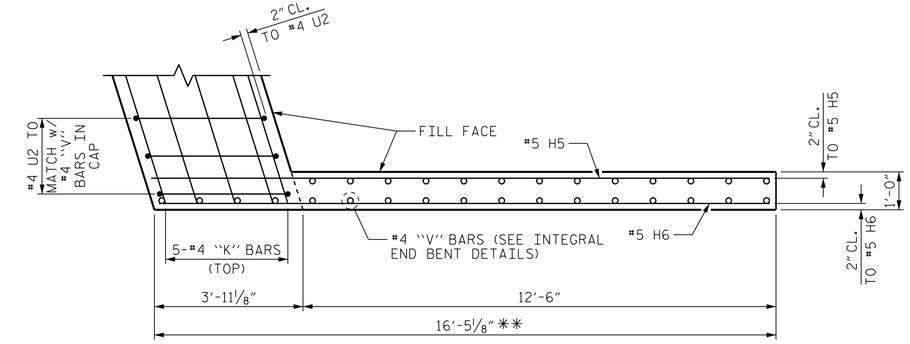

PLAN OF WING W4

** SEE SPECIAL PROVISIONS FOR APPLICATION OF BRIDGE COATING.

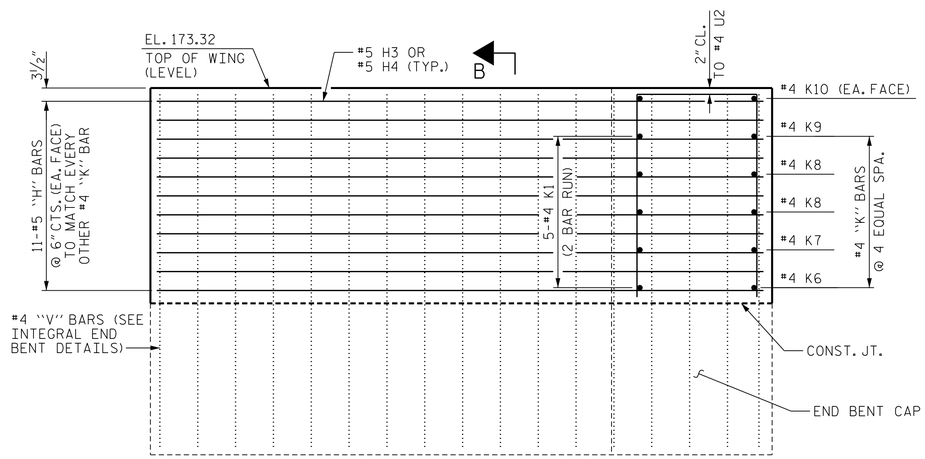

ELEVATION OF WING W3

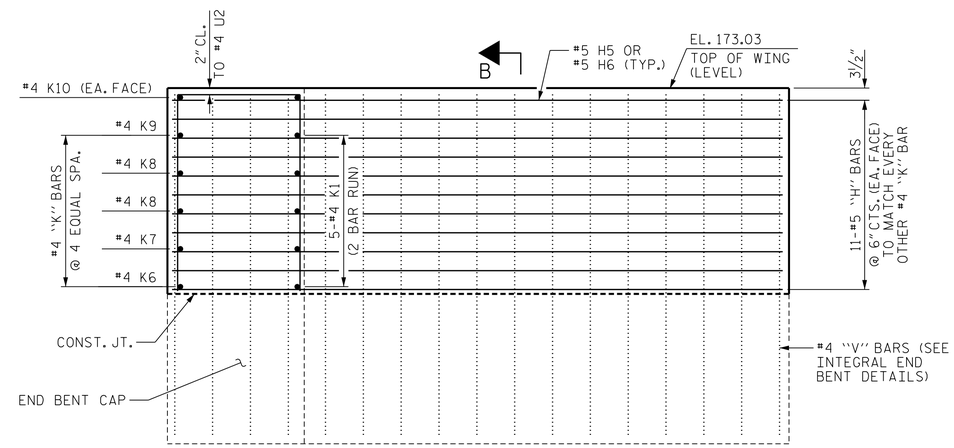

ELEVATION OF WING W4

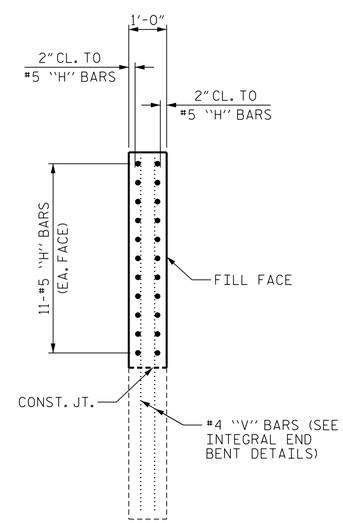

SECTION B-B

NOTE: LOWER PORTION OF WINGS BUILT WITH INTEGRAL END BENTS. FOR DETAILS AND REINFORCING STEEL, SEE INTEGRAL END BENT SHEETS.

PROJECT NO. W-5107
JOHNSTON COUNTY
STATION: 115+83.99 -L-

SHEET 5 OF 5

STATE OF NORTH CAROLINA
DEPARTMENT OF TRANSPORTATION
RALEIGH

SUPERSTRUCTURE

PLAN OF SPANS
WING DETAILS
END BENT 2

NORTH CAROLINA PROFESSIONAL SEAL 027799 ENGINEER ALLYSON K. ORR
11/26/2014

MI ENGINEERING
1011 SCHAUB DRIVE, SUITE 100
RALEIGH, NC 27606
(919) 851-6606
FIRM PE NUMBER : P-0671

REVISIONS							SHEET NO.
NO.	BY:	DATE:	NO.	BY:	DATE:		S-51
1			3				TOTAL SHEETS
2			4				70

DRAWN BY :	B.E. LANNING	DATE :	03/13
CHECKED BY :	A.K. ORR	DATE :	04/13
DESIGN ENGINEER OF RECORD :	A.K. ORR	DATE :	11/14

11/25/2014
2:37:01 PM
User: blanning
Filename: P:\NC Bridges\MI2005 - W-5107 Johnston Co\MI2005.02.Site 2\Structures\402.055.S02.W5107.SMU.PS5.dgn