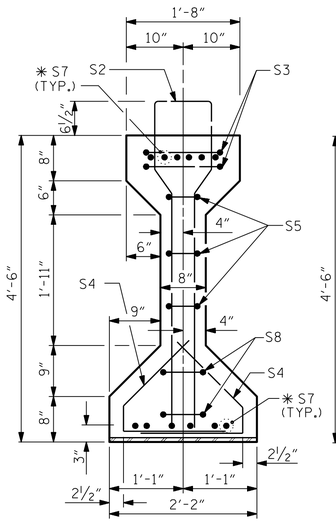

SECTION A-A

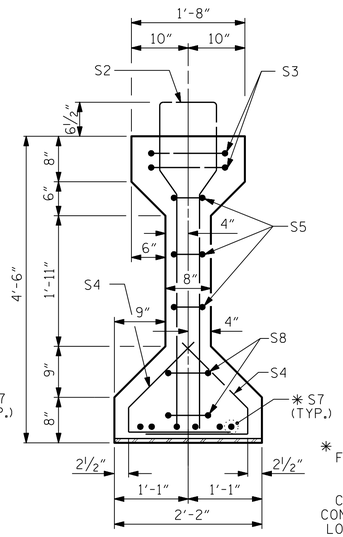

SECTION B-B

✱ FOR S7 BARS, SEE DETAIL "A" OF PRESTRESSED CONCRETE GIRDER CONTINUOUS FOR LIVE LOAD DETAILS SHEET

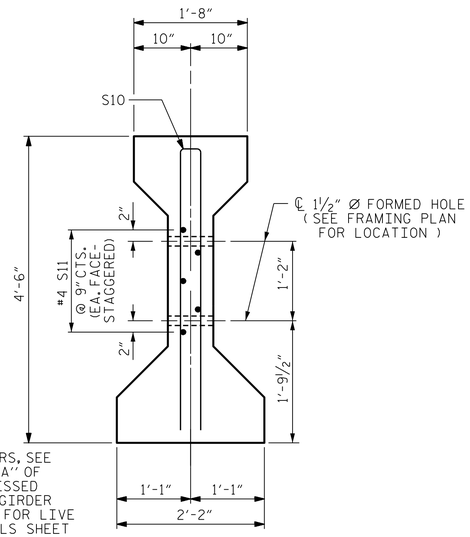

SECTION C-C
(S1 BARS NOT SHOWN)

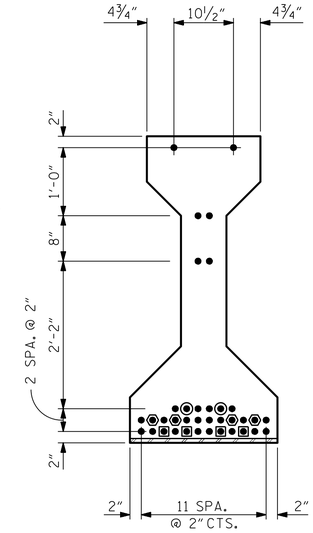

AT END OF GIRDER

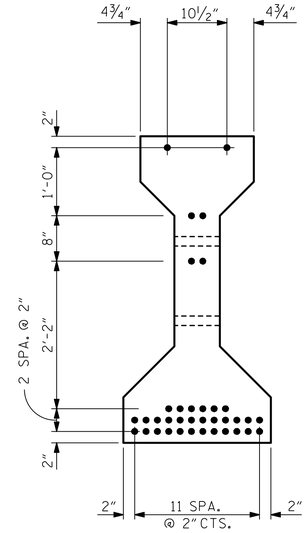

AT ℄ OF GIRDER

0.6" Ø LOW RELAXATION STRAND LAYOUT

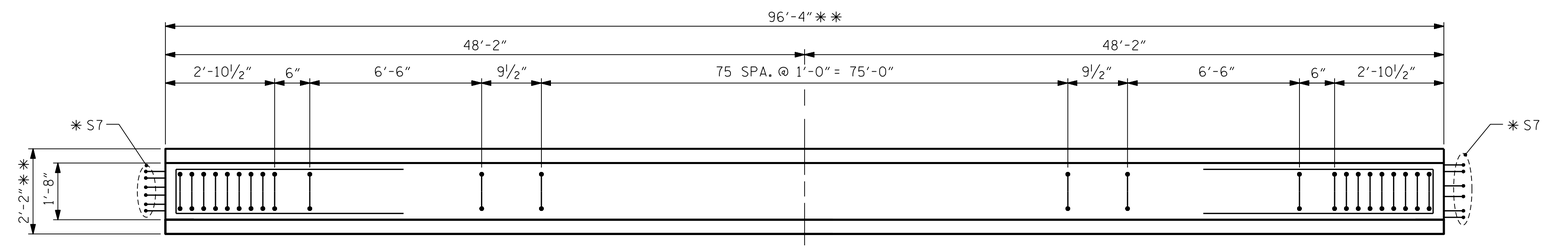

PLAN OF GIRDER

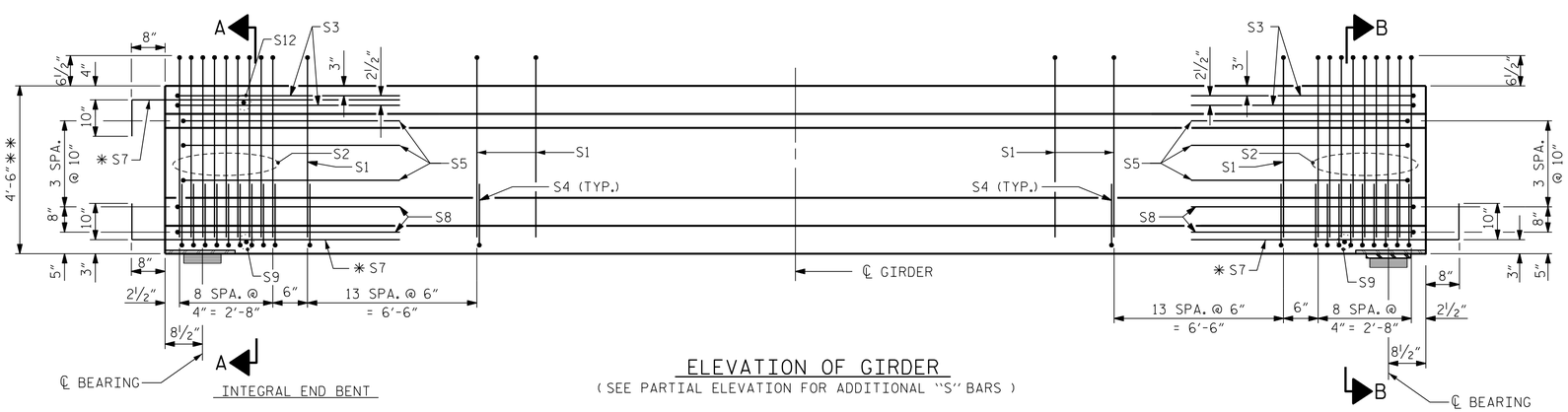

ELEVATION OF GIRDER
(SEE PARTIAL ELEVATION FOR ADDITIONAL "S" BARS)

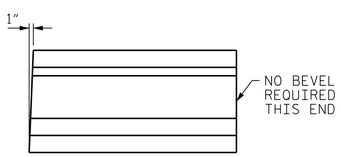

GIRDER BEVEL DETAIL

DEBONDING LEGEND

- FULLY BONDED STRAND
- STRANDS DEBONDED FOR 4'-0" FROM END OF GIRDER
- STRANDS DEBONDED FOR 8'-0" FROM END OF GIRDER
- STRANDS DEBONDED FOR 10'-0" FROM END OF GIRDER

✱✱ SEE SPECIAL PROVISIONS FOR APPLICATION OF BRIDGE COATING.

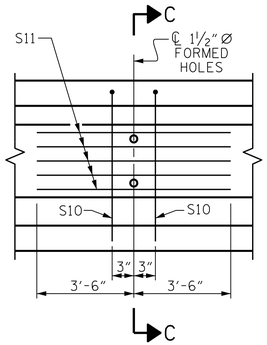

PARTIAL ELEVATION
SHOWING INTERMEDIATE DIAPHRAGM REINFORCING STEEL

0.6" Ø L. R. GRADE 270 STRANDS

AREA (SQUARE INCHES)	ULTIMATE STRENGTH (LBS. PER STRAND)	APPLIED PRESTRESS (LBS. PER STRAND)
0.217	58,600	43,950

REINFORCING STEEL FOR ONE GIRDER

BAR	NUMBER	SIZE	TYPE	LENGTH	WEIGHT
S1	104	#4	1	10'-9"	747
S2	18	#6	1	10'-9"	291
S3	4	#4	2	9'-1"	24
S4	92	#4	3	3'-5"	210
S5	6	#4	2	8'-5"	34
✱ S7	18	#5	STR	3'-8"	69
S8	4	#4	2	8'-7"	23
S9	2	#3	STR	1'-10"	1
S10	2	#5	2	8'-8"	18
S11	5	#4	STR	7'-0"	23
S12	1	#3	STR	1'-4"	1

✱ NOTE: S7 BARS SHALL BE BENT BEFORE SHIPMENT. HEAT BENDING SHALL NOT BE ALLOWED.

BAR TYPES

ALL BAR DIMENSIONS ARE OUT-TO-OUT.

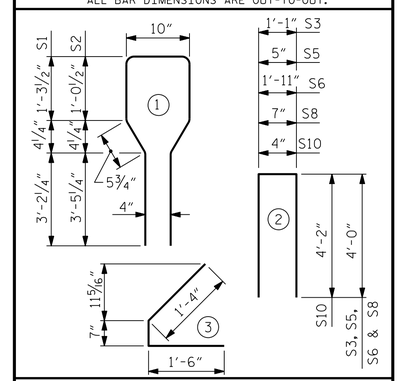

QUANTITIES FOR ONE GIRDER

	REINFORCING STEEL LB.	7500 PSI CONCRETE C.Y.	0.6" Ø L.R. STRANDS No.
ALL	1441	19.6	36

GIRDERS REQUIRED

SPAN	NUMBER	LENGTH	TOTAL LENGTH
A	5	96.33 FT.	481.65 FT.
B	5	96.33 FT.	481.65 FT.

PROJECT NO. W-5107
JOHNSTON COUNTY
STATION: 115+83.99 -L-

SHEET 1 OF 3

STATE OF NORTH CAROLINA
DEPARTMENT OF TRANSPORTATION
RALEIGH

STANDARD
AASHTO TYPE IV
PRESTRESSED CONCRETE GIRDER
CONTINUOUS FOR LIVE LOAD

ASSEMBLED BY:	J.S. ISRAELNAIM	DATE:	03/13
CHECKED BY :	A.K. ORR	DATE:	03/13
DESIGN ENGINEER OF RECORD:	A.K. ORR	DATE:	11/14

DRAWN BY :	ELR	8/91	REV. 10/17/00R RWW/LES
CHECKED BY :	GRP	8/91	REV. 5/1/06R TLA/GM
			REV. 10/1/11 MAA/GM

MI ENGINEERING
1011 SCHAUB DRIVE, SUITE 100
RALEIGH, NC 27606
(919) 851-6606
FIRM PE NUMBER : P-0671

NORTH CAROLINA PROFESSIONAL SEAL 027799 ENGINEER ALLYSON K. ORR
11/26/2014

REVISIONS							SHEET NO.
NO.	BY:	DATE:	NO.	BY:	DATE:		S-53
1			3				TOTAL SHEETS
2			4				70

STD. NO. PCG6

11/25/2014
2:37:05 PM
User: blanning
Filename: P:\NC Bridges\MI2005 - W-5107 Johnston Co\MI2005.02.Site 2\Structures\402.065.S02.W5107.SMU.PCG1.dgn