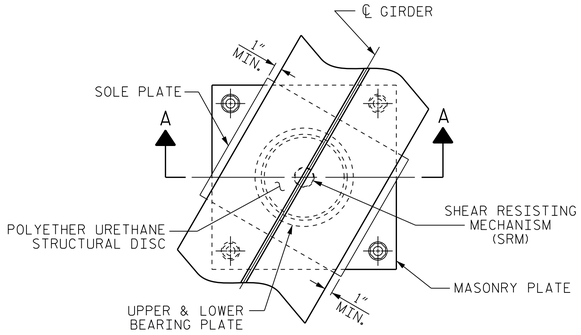

PLAN

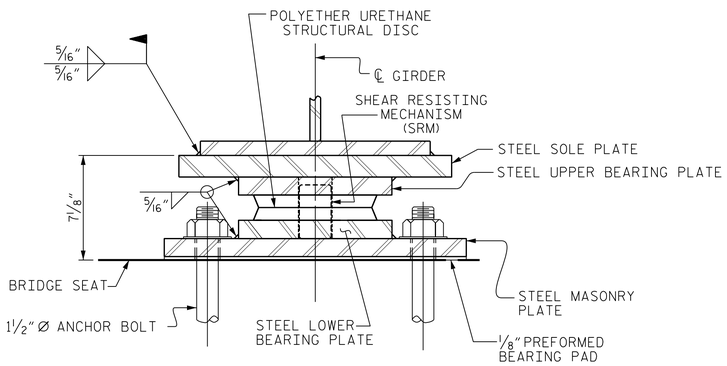

SECTION A-A

DB1, FIXED

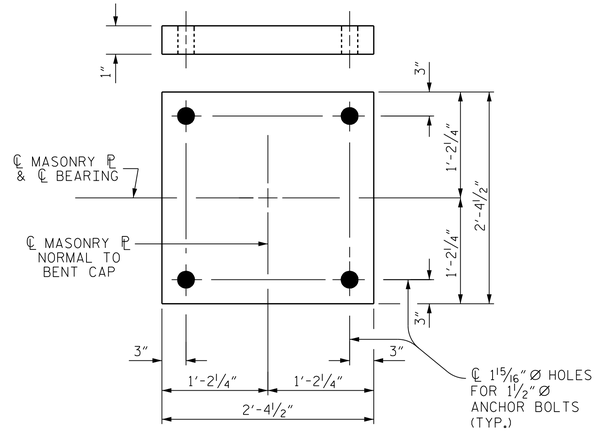

PLAN

MASONRY PLATE DETAILS

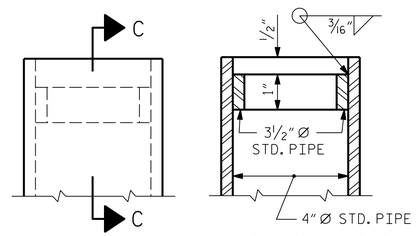

SECTION C-C

DETAIL "A"

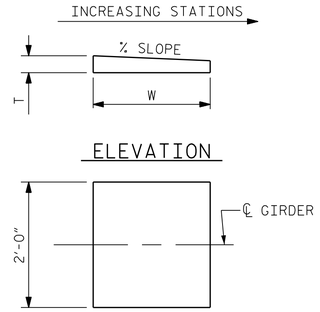

ELEVATION

PLAN

NOTE:
DIMENSIONS "W" AND "T" SHALL BE DETERMINED BY THE BEARING MANUFACTURER.

SOLE PLATE SLOPE TABLE		
PLATE	SLOPE	NUMBER REQ'D.
P1	0.40%	1
P2	0.53%	1
P3	0.67%	1
P4	0.81%	1
P5	0.95%	1
P6	1.00%	1
P7	1.22%	1

SOLE PLATE DETAILS

NOTES

FOR DISC BEARINGS, SEE SPECIAL PROVISIONS.

ALL BEARING PLATES SHALL BE AASHTO M270 GRADE 50W OR GRADE 50.

AT ALL POINTS OF SUPPORT, NUTS FOR ANCHOR BOLTS SHALL BE FINGER-TIGHTENED PLUS AN ADDITIONAL 1/4 TURN. THE THREAD OF THE NUT AND BOLT SHALL THEN BE BURRED WITH A SHARP POINTED TOOL.

WHEN WELDING THE SOLE PLATE TO THE GIRDER, USE TEMPERATURE INDICATING WAX PENS, OR OTHER SUITABLE MEANS, TO ENSURE THAT THE TEMPERATURE OF THE BEARING DOES NOT EXCEED 250°F. TEMPERATURES ABOVE THIS MAY DAMAGE THE TFE OR URETHANE DISC.

AFTER BEARING ASSEMBLY IS IN PLACE AND ANCHOR BOLTS HAVE BEEN FINALLY POSITIONED, THEY SHALL BE GROUTED IN PLACE AS SHOWN.

THE CLOSURE PLATE, GROUT PIPE, AND STANDARD PIPE FOR THIS ASSEMBLY NEED NOT BE GALVANIZED.

SOLE PLATES SHOULD BE WELDED TO GIRDER FLANGES AND ANCHOR BOLTS SHOULD BE GROUTED BEFORE FALSEWORK IS PLACED.

ALL SURFACES OF BEARING PLATES SHALL BE SMOOTH AND STRAIGHT.

FOR ATTACHMENT OF THE STAINLESS STEEL SHEETS TO THE STEEL SOLE PLATE AND GUIDE BARS, AS WELL AS THE TOP AND SIDE PTFE SHEETS TO THE STEEL UPPER BEARING PLATE, SEE SPECIAL PROVISIONS.

FOR THERMAL SPRAYED COATINGS (METALLIZATION), SEE SPECIAL PROVISIONS.

THE MINIMUM ROTATIONAL CAPACITY FOR ALL BEARINGS SHALL BE 0.02 RADIANS.

LOADS AND MOVEMENT

DESIGNATIONS		LOCATION	NUMBER OF BEARINGS	UNFACTORED VERTICAL LOAD (KIPS)			FACTORED HORIZONTAL LOAD (KIPS)	ONE-WAY MOVEMENT (IN.)
				DEAD		LIVE		
BEARINGS	MASONRY ℙ			DC	DW	LL+IM		
DB1	M1	BENT 1	7	365	60	310	145	0

PROJECT NO. W-5107
JOHNSTON COUNTY
STATION: 33+45.98 -L-

STATE OF NORTH CAROLINA
DEPARTMENT OF TRANSPORTATION
RALEIGH

STANDARD

DISC BEARING DETAILS

NORTH CAROLINA PROFESSIONAL SEAL 027799 ENGINEER ALLYSON K. ORR
11/26/2014

MI ENGINEERING
1011 SCHAUB DRIVE, SUITE 100
RALEIGH, NC 27606
(919) 851-6606
FIRM PE NUMBER : P-0671

REVISIONS						SHEET NO.
NO.	BY:	DATE:	NO.	BY:	DATE:	S-17
1			3			TOTAL SHEETS
2			4			70

ASSEMBLED BY: B.E. LANNING DATE: 10/14
CHECKED BY : A.K. ORR DATE: 10/14
DESIGN ENGINEER OF RECORD: A.K. ORR DATE: 11/14
DRAWN BY : TMG 08/13
CHECKED BY : EKP 10/13
REV.
REV.
REV.

11/25/2014
2:14:39 PM
User: blanning
Filename: P:\NC Bridges\MI2005 - W-5107 Johnston Co\MI2005.01_Site 1\Structures\401_085_S01_W5107_SMU_BG2.dgn

STD. NO. DB1 (SHT 1)