NOTES

FOR NOTES, SEE SHEET 1 OF 3.
FOR DETAIL "A", SEE SHEET 1 OF 3.
FOR SECTION B-B, SEE SHEET 3 OF 3.
FOR END ELEVATION, SEE SHEET 1 OF 3.

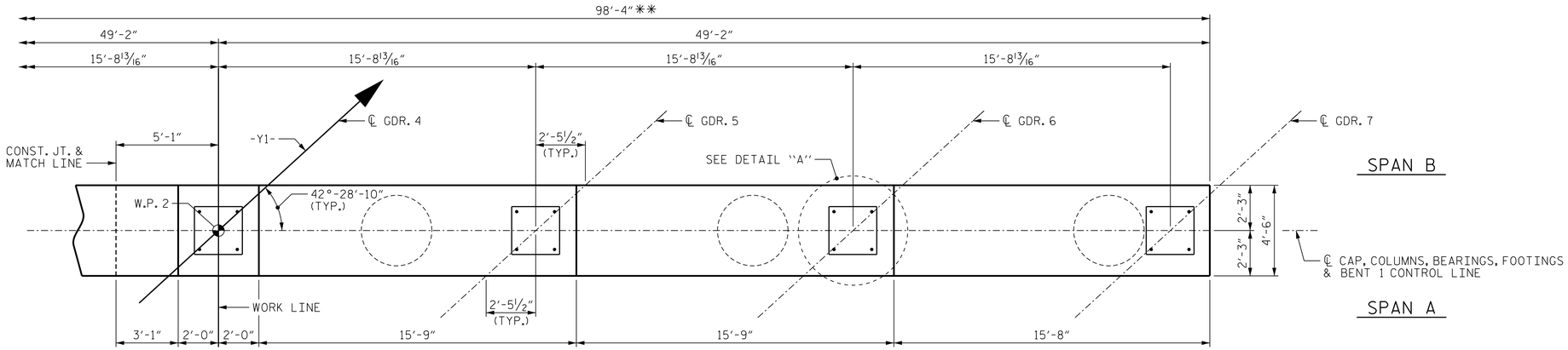

PLAN

**SEE SPECIAL PROVISIONS FOR APPLICATION OF BRIDGE COATING.

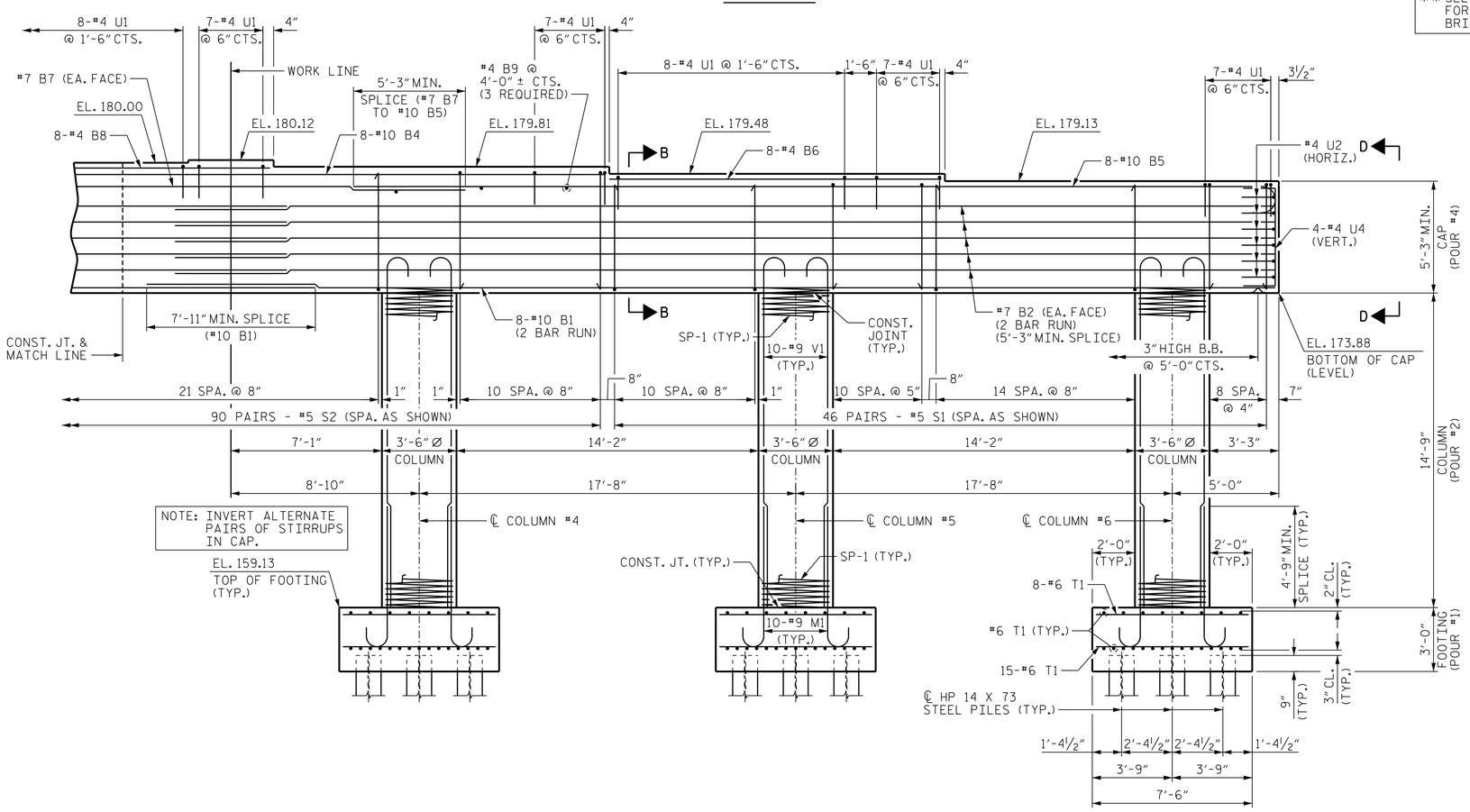

ELEVATION

REINFORCING STEEL, DIMENSIONS AND DETAILS ARE TYPICAL FOR EACH COLUMN AND FOOTING.

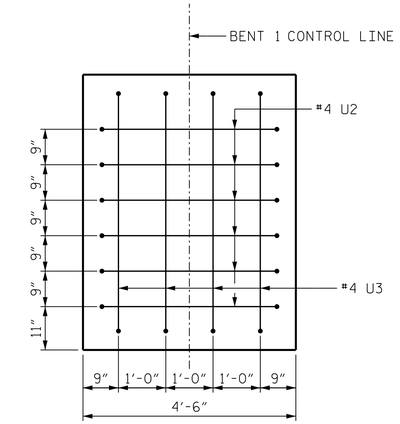

VIEW C-C

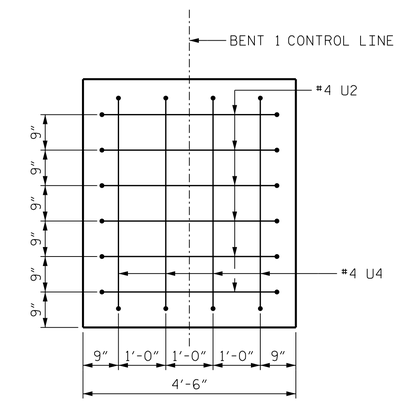

VIEW D-D

PROJECT NO. W-5107
JOHNSTON COUNTY
STATION: 33+45.98 -L-

SHEET 2 OF 3

STATE OF NORTH CAROLINA
DEPARTMENT OF TRANSPORTATION
RALEIGH

SUBSTRUCTURE
BENT 1

NORTH CAROLINA PROFESSIONAL SEAL 027799 ENGINEER ALLYSON K. ORR
11/26/2014

MI ENGINEERING
1011 SCHAUB DRIVE, SUITE 100
RALEIGH, NC 27606
(919) 851-6606
FIRM PE NUMBER : P-0671

REVISIONS						
NO.	BY:	DATE:	NO.	BY:	DATE:	
1			3			
2			4			

SHEET NO. S-32
TOTAL SHEETS 70

DRAWN BY : B.E. LANNING DATE : 10/14
CHECKED BY : G.R. COLS DATE : 10/14
DESIGN ENGINEER OF RECORD : A.K. ORR DATE : 11/14

11/25/2014
2:15:10 PM
User: blanning
Filename: P:\NC Bridges\MI2005 - W-5107 Johnston Co\MI2005.01_Site 1\Structures\401_160_S01_W5107_SMU_B1B.dgn