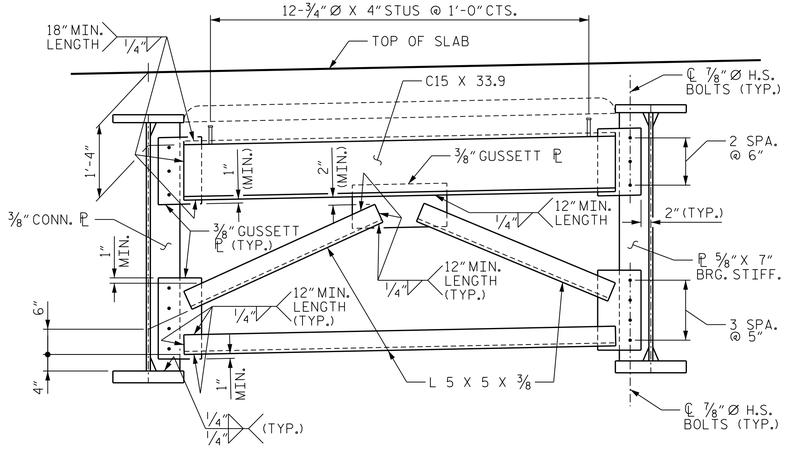

END BENT CROSS FRAME (CF-1)

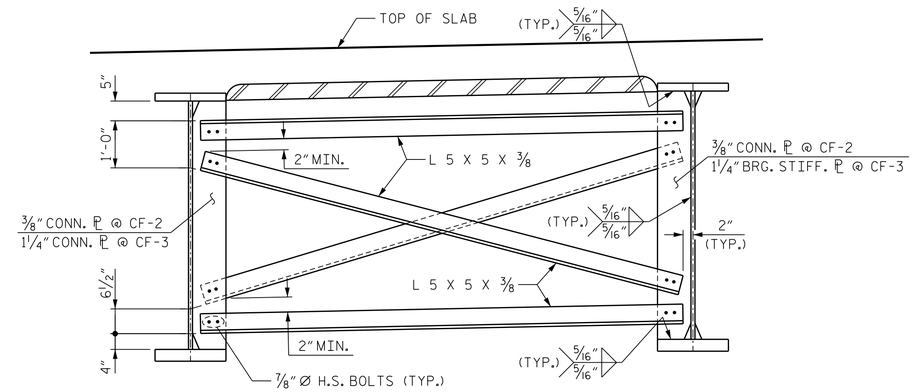

BENT CROSS FRAME &
INTERMEDIATE CROSS FRAME (CF-2) & (CF-3)

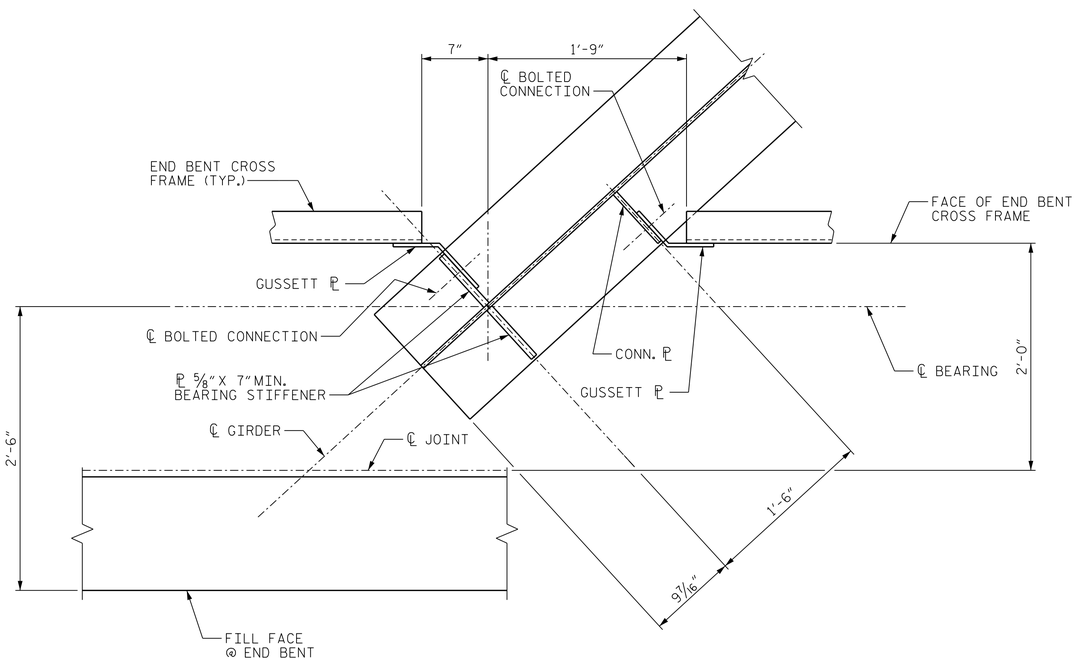

PLAN AT END BENT CROSS FRAME (CF-1)

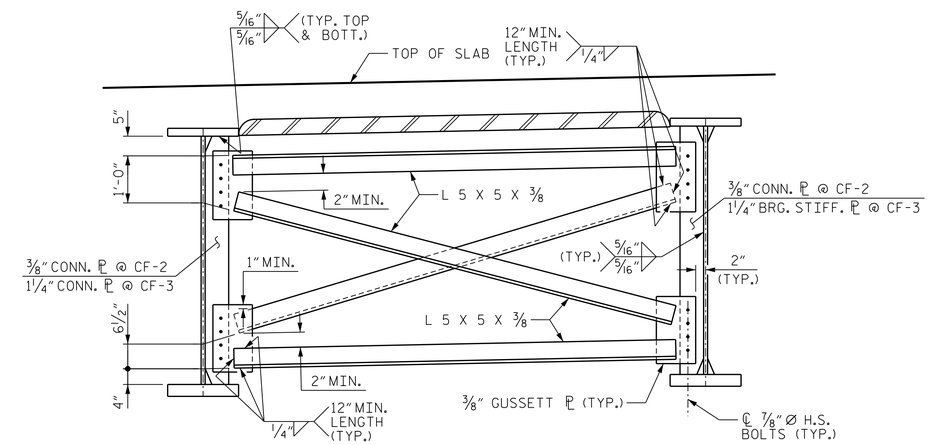

OPTIONAL BENT CROSS FRAME & OPTIONAL
INTERMEDIATE CROSS FRAME (CF-2) & (CF-3)

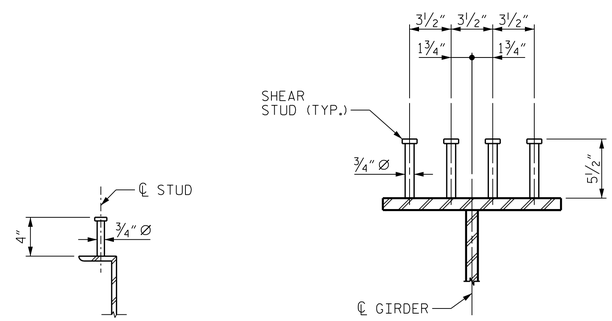

ON DIAPHRAGMS ON GIRDERS

SHEAR STUD DETAILS

STUDS ON GIRDERS MAY BE SHIFTED SLIGHTLY, IF NECESSARY, TO CLEAR FLANGE SPLICE WELD.

PROJECT NO. W-5107
JOHNSTON COUNTY
STATION: 33+45.98 -L-

SHEET 2 OF 4

STATE OF NORTH CAROLINA
DEPARTMENT OF TRANSPORTATION
RALEIGH

SUPERSTRUCTURE
STRUCTURAL STEEL DETAILS

NORTH CAROLINA PROFESSIONAL SEAL 027799 ENGINEER ALLYSON K. ORR
11/26/2014

MI ENGINEERING
1011 SCHAUB DRIVE, SUITE 100
RALEIGH, NC 27606
(919) 851-6606
FIRM PE NUMBER : P-0671

REVISIONS						SHEET NO.
NO.	BY:	DATE:	NO.	BY:	DATE:	S-13
1			3			TOTAL SHEETS
2			4			70

DRAWN BY : B.E. LANNING DATE : 03/13
CHECKED BY : A.K. ORR DATE : 04/14
DESIGN ENGINEER OF RECORD : A.K. ORR DATE : 11/14

11/25/2014
2:14:31 PM
User: blanning
Filename: P:\NC Bridges\MI2005 - W-5107 Johnston Co\MI2005.01.Site 1\Structures\401_065_S01_W5107_SMU_SS2.dgn