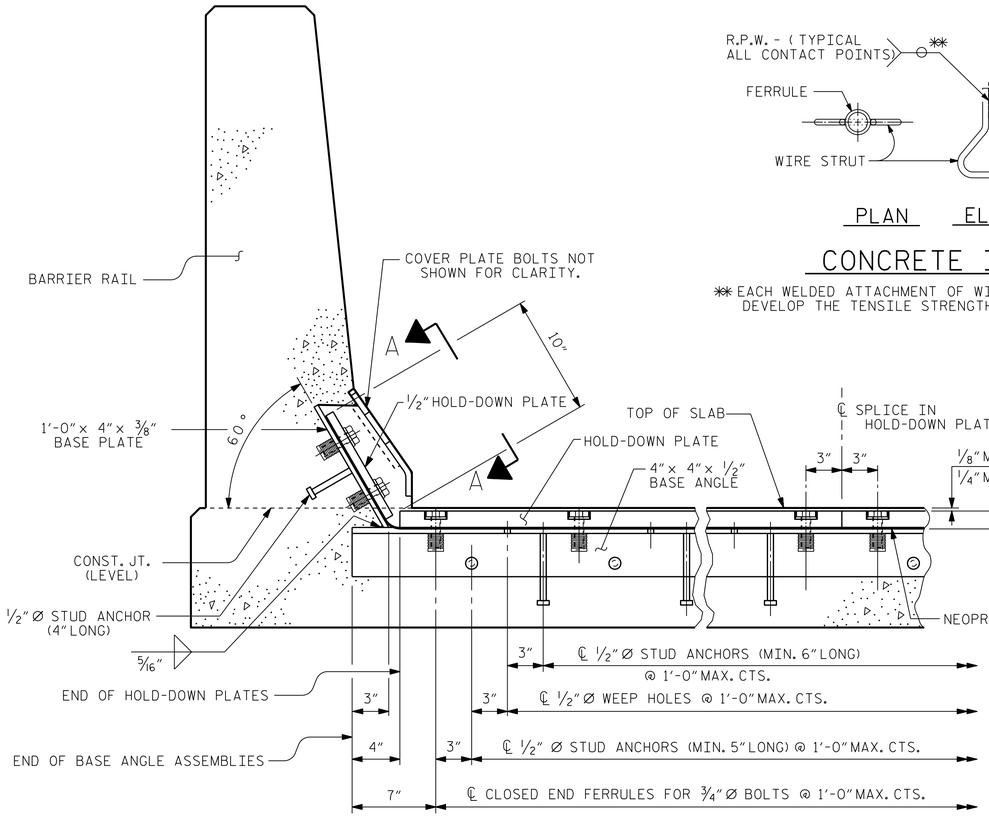

SECTION THRU RAIL NORMAL TO JOINT

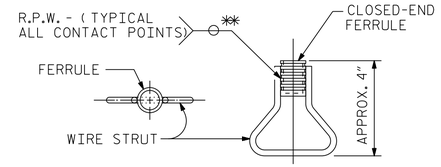

CONCRETE INSERT

✱✱ EACH WELDED ATTACHMENT OF WIRE TO FERRULE SHALL DEVELOP THE TENSILE STRENGTH OF THE WIRE.

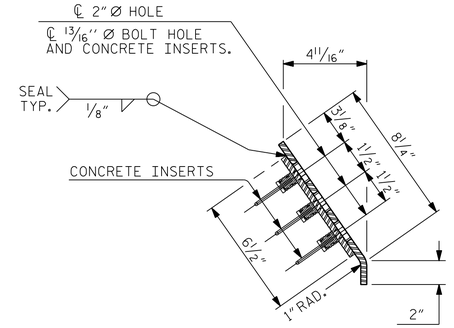

END VIEW

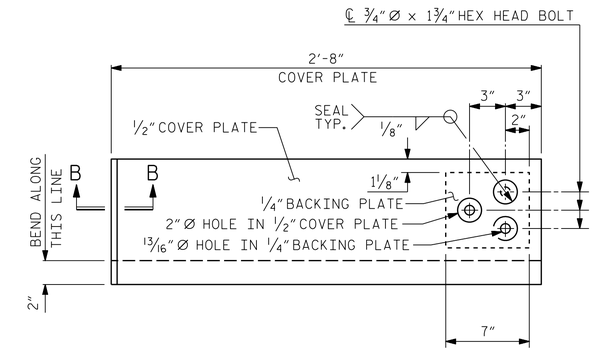

TYPE II - ELEVATION VIEW

COVER PLATE DETAILS

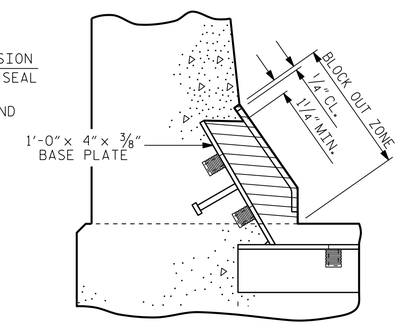

BLOCK OUT DETAIL

SEE " SECTION A - A " FOR OTHER DETAILS.

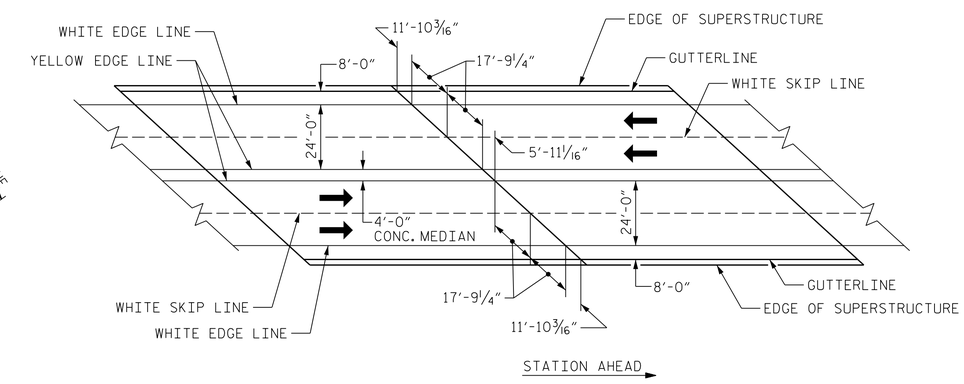

PAVEMENT MARKING ALIGNMENT

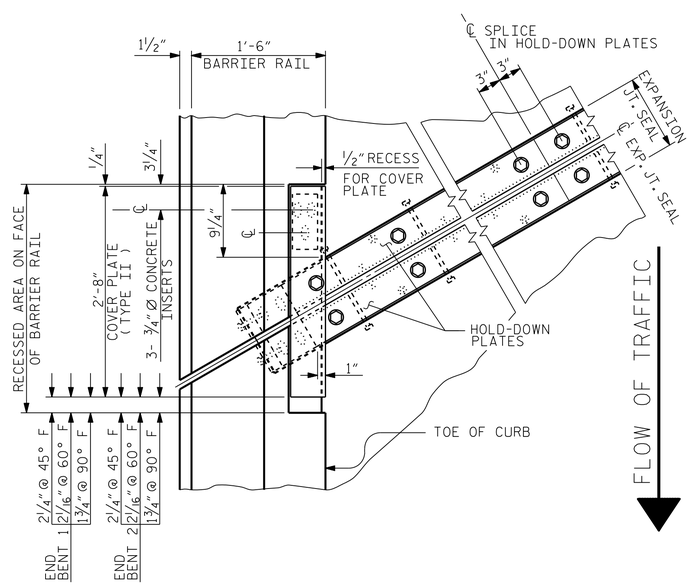

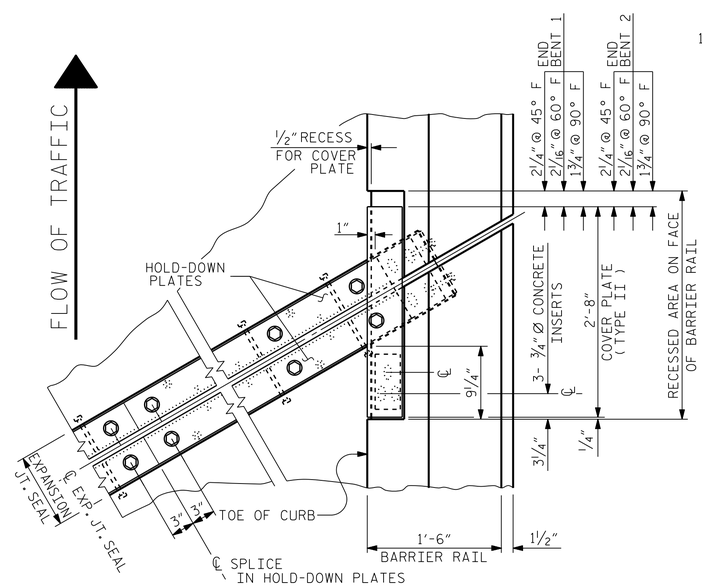

PLAN OF EXPANSION JOINT SEAL

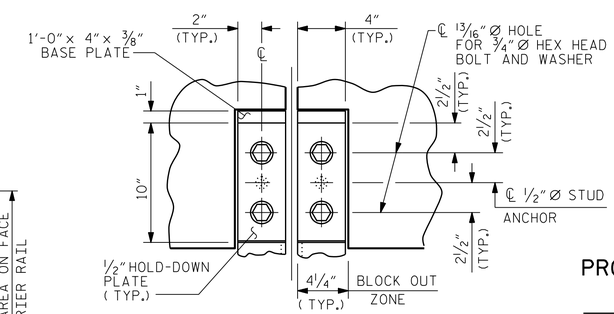

SECTION A - A

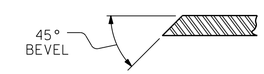

SECTION B - B

PROJECT NO. W-5107

JOHNSTON COUNTY

STATION: 33+45.98 -L-

SHEET 2 OF 2

STATE OF NORTH CAROLINA
DEPARTMENT OF TRANSPORTATION
RALEIGH

STANDARD

EXPANSION JOINT SEAL DETAILS FOR BARRIER RAIL

NORTH CAROLINA PROFESSIONAL SEAL 027799 ENGINEER ALLYSON K. ORR

11/26/2014

ASSEMBLED BY: J.S. ISRAELNAIM	DATE: 03/13
CHECKED BY : A.K. ORR	DATE: 10/14
DESIGN ENGINEER OF RECORD: A.K. ORR	DATE: 11/14
DRAWN BY : REK 9/87	REV. 10/1/11 MAA/GM
CHECKED BY : CRK 10/87	REV. 7/12 MAA/GM
	REV. 6/13 MAA/GM

MI ENGINEERING
1011 SCHAUB DRIVE, SUITE 100
RALEIGH, NC 27606
(919) 851-6606
FIRM PE NUMBER : P-0671

REVISIONS								SHEET NO.
NO.	BY:	DATE:	NO.	BY:	DATE:			S-24
1			3					TOTAL SHEETS
2			4					70

STD. NO. EJS2

11/25/2014
2:14:53 PM
User: blanning
Filename: P:\NC Bridges\W12005 - W-5107 Johnston Co\W12005.01_Site 1\Structures\401_120_S01_W5107_SMU_EJS2.dgn