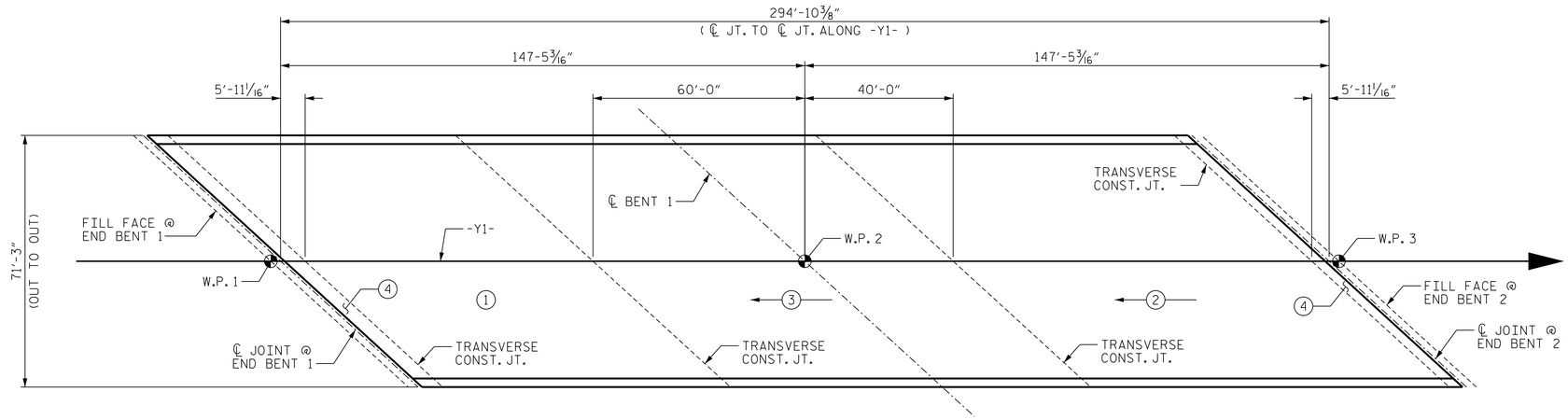

POURING SEQUENCE

(#) INDICATES POUR NUMBER AND POUR DIRECTION
CONCRETE MEDIAN NOT SHOWN

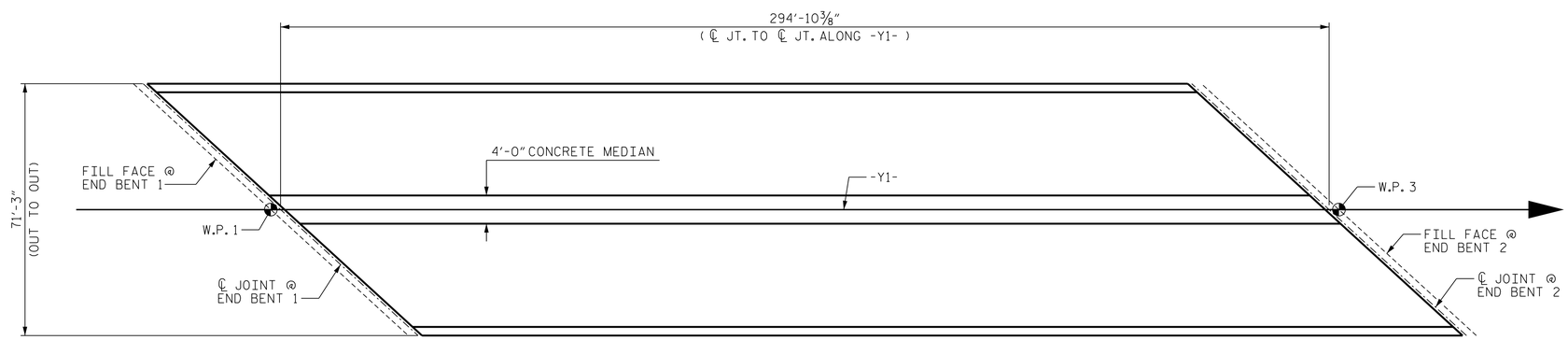

LAYOUT FOR COMPUTING AREA OF REINFORCED CONCRETE DECK SLAB
(SQ. FT. = 21,009)

BAR TYPES

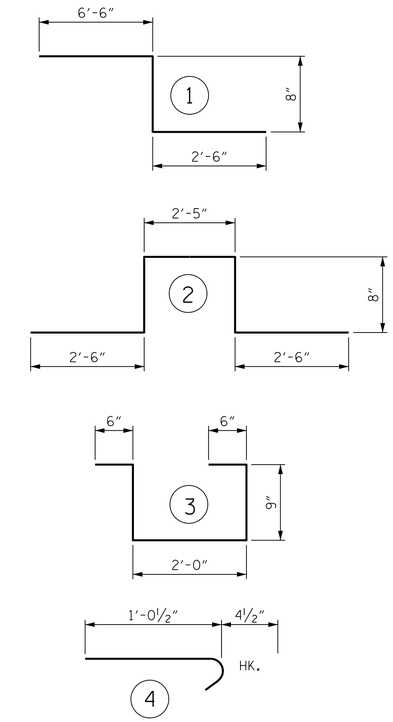

ALL BAR DIMENSIONS ARE OUT TO OUT.

SUPERSTRUCTURE BILL OF MATERIAL

	CLASS AA CONCRETE	REINFORCING STEEL	EPOXY COATED REINFORCING STEEL
	(CU. YDS.)	(LBS.)	(LBS.)
POUR #1	191.5	-	-
POUR #2	238.5	-	-
POUR #3	234.3	-	-
POUR #4	35.9	-	-
MEDIAN	17.0		
TOTALS**	717.2	80,530	83,406

**QUANTITIES FOR BARRIER RAIL ARE NOT INCLUDED.

SUPERSTRUCTURE REINFORCING STEEL LENGTHS ARE BASED ON THE FOLLOWING MINIMUM SPLICE LENGTHS

BAR SIZE	SUPERSTRUCTURE EXCEPT APPROACH SLABS, PARAPET, AND BARRIER RAIL		APPROACH SLABS		PARAPET AND BARRIER RAIL
	EPOXY COATED	UNCOATED	EPOXY COATED	UNCOATED	
#4	2'-0"	1'-9"	2'-0"	1'-9"	2'-9"
#5	2'-6"	2'-2"	2'-6"	2'-2"	3'-5"
#6	3'-0"	2'-7"	3'-10"	2'-7"	4'-4"
#7	5'-3"	3'-6"			
#8	6'-10"	4'-7"			

GROOVING BRIDGE FLOORS

APPROACH SLABS	2,700 SQ.FT.
BRIDGE DECK	17,007 SQ.FT.
TOTAL	19,707 SQ.FT.

PROJECT NO. W-5107
JOHNSTON COUNTY
STATION: 33+45.98 -L-

SHEET 1 OF 2

STATE OF NORTH CAROLINA
DEPARTMENT OF TRANSPORTATION
RALEIGH

SUPERSTRUCTURE BILL OF MATERIAL

NORTH CAROLINA PROFESSIONAL SEAL 027799 ENGINEER ALLYSON K. ORR
DOCUMENT NOT CONSIDERED FINAL UNLESS ALL SIGNATURES COMPLETED
11/26/2014

MI ENGINEERING
1011 SCHAUB DRIVE, SUITE 100
RALEIGH, NC 27606
(919) 851-6606
FIRM PE NUMBER : P-0671

REVISIONS						SHEET NO.
NO.	BY:	DATE:	NO.	BY:	DATE:	S-25
1			3			TOTAL SHEETS
2			4			70

DRAWN BY : J.S. ISRAELNAIM DATE : 04/13
CHECKED BY : A.K. ORR DATE : 10/14
DESIGN ENGINEER OF RECORD : A.K. ORR DATE : 11/14

11/25/2014
2:14:55 PM
User: blanning
Filename: P:\NC Bridges\MI2005 - W-5107 Johnston Co\MI2005.01.Site 1\Structures\401.125.S01.W5107.SMU.BMI.dgn