NOTES

ALL STRUCTURAL STEEL SHALL BE AASHTO M270 GRADE 50W AND PAINTED IN ACCORDANCE WITH SYSTEM 4 OF ARTICLE 442-8 OF THE STANDARD SPECIFICATIONS, EXCEPT THE EXTERIOR FACE OF THE EXTERIOR GIRDERS SHALL BE PAINTED WITH A TOP COAT OF BROWN, FS #30045. THIS SHALL BE FIELD PAINTED, AND APPLY TO BOTTOM OF TOP FLANGE (EXTERIOR FACE ONLY), WEB, TOP OF BOTTOM FLANGE (EXTERIOR FACE ONLY), AND BOTTOM OF BOTTOM FLANGE.

ALL DIMENSIONS SHOWN ARE HORIZONTAL OR VERTICAL, UNLESS OTHERWISE NOTED.

ALL FIELD CONNECTIONS TO BE 7/8" DIA. HIGH STRENGTH BOLTS, UNLESS OTHERWISE NOTED.

BEARING STIFFENERS ARE TO BE PLACED NORMAL TO THE WEB OF THE GIRDER AND SHALL BE PLUMB.

PERMITTED FLANGE AND WEB SHOP SPLICES SHALL NOT BE LOCATED WITHIN 15 FEET OF MAXIMUM DEAD LOAD DEFLECTION (NOR WITHIN 15 FEET OF INTERMEDIATE BEARINGS OF CONTINUOUS UNITS). KEEP 2 FEET MINIMUM BETWEEN WEB AND FLANGE SHOP SPLICES. KEEP 6" MINIMUM BETWEEN CONNECTOR PLATE OR TRANSVERSE STIFFENER WELDS AND WEB OR FLANGE SHOP SPLICES.

STUDS ON GIRDERS MAY BE SHIFTED UP TO 1" IF NECESSARY TO CLEAR FLANGE SPLICE WELD.

TENSION ON THE ASTM A325 BOLTS SHALL BE CALIBRATED USING DIRECT TENSION INDICATOR WASHERS IN ACCORDANCE WITH ARTICLE 440-8 OF THE STANDARD SPECIFICATIONS.

ENDS OF GIRDERS SHALL BE PLUMB.

STRUCTURAL STEEL ERECTION IN A CONTINUOUS UNIT SHALL BE COMPLETE BEFORE FALSEWORK OR FORMS ARE PLACED ON THE UNIT.

FABRICATORS SHALL DETAIL CROSS FRAME MEMBERS AND CONNECTIONS FOR STEEL DEAD LOAD FIT UP.

AT THE CONTRACTOR'S OPTION, THE CROSS FRAME WITH THE WELDED GUSSET PLATES MAY BE USED IN LIEU OF THE CROSS FRAME WITH BOLTED ANGLES AT NO ADDITIONAL COST TO THE DEPARTMENT.

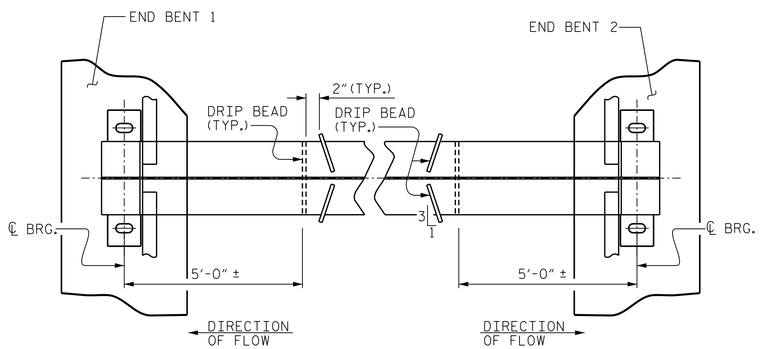

PART PLAN - BOTTOM FLANGE

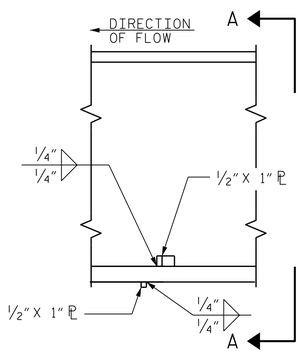

SECTION

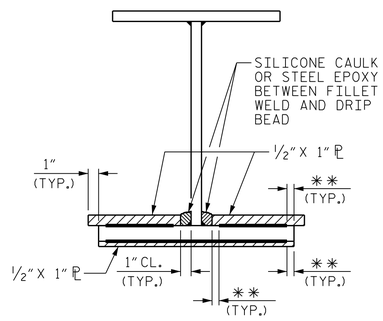

VIEW A-A

** SEE "WELD TERMINATION DETAILS" SHEET 4 OF 4.

DRIP BEAD DETAILS

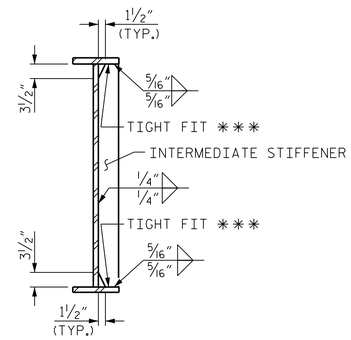

INTERMEDIATE STIFFENER

*** TIGHT FIT TO FLANGE WHERE CHARPY V-NOTCH TESTING ON FLANGE IS REQUIRED. IF STIFFENER IS USED AS A CONNECTOR PLATE, TIGHT FIT AND WELD TO THE FLANGE.

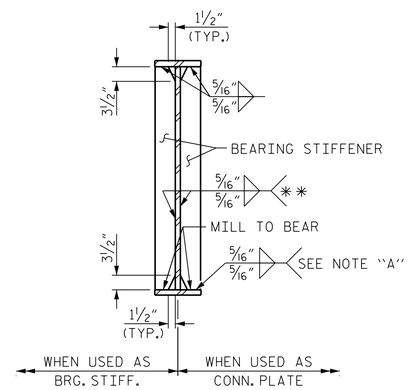

BEARING STIFFENER

NOTE A:
ONLY WELD BEARING STIFFENER TO BOTTOM FLANGE IF CROSS FRAME IS ATTACHED TO BEARING STIFFENER.

BEARING STIFFENER MAY REQUIRE COPING IF WIDER THAN BOTTOM FLANGE.

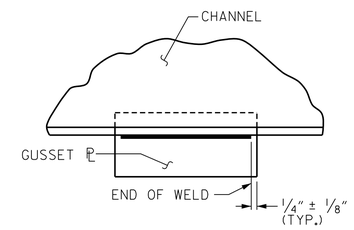

TYPICAL GUSSET PLATE CONNECTION

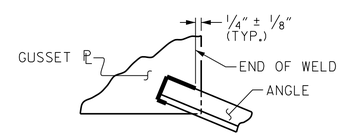

TYPICAL "ANGLE" TO GUSSET PLATE CONNECTION

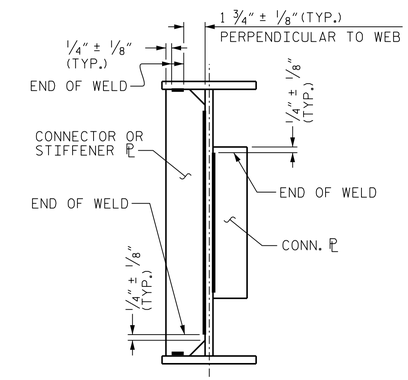

TYPICAL STIFFENER OR CONNECTOR PLATE CONNECTIONS

WELD TERMINATION DETAILS

PROJECT NO. W-5107
JOHNSTON COUNTY
STATION: 33+45.98 -L-

SHEET 4 OF 4

NORTH CAROLINA PROFESSIONAL SEAL 027799 ENGINEER ALLYSON K. ORR
11/26/2014

STATE OF NORTH CAROLINA
DEPARTMENT OF TRANSPORTATION
RALEIGH

SUPERSTRUCTURE
STRUCTURAL STEEL DETAILS

MI ENGINEERING
1011 SCHAUB DRIVE, SUITE 100
RALEIGH, NC 27606
(919) 851-6606
FIRM PE NUMBER : P-0671

REVISIONS						SHEET NO.
NO.	BY:	DATE:	NO.	BY:	DATE:	S-15
1			3			TOTAL SHEETS
2			4			70

DRAWN BY :	B.E. LANNING	DATE :	04/13
CHECKED BY :	A.K. ORR	DATE :	04/13
DESIGN ENGINEER OF RECORD :	A.K. ORR	DATE :	11/14

11/25/2014
2:14:35 PM
User: blanning
Filename: P:\NC Bridges\WI2005 - W-5107 Johnston Co\WI2005.01_Site 1\Structures\401_075_S01_W5107_SMU_SS4.dgn