NOTES

STIRRUPS AND "U" BARS IN CAP MAY BE SHIFTED AS NECESSARY TO CLEAR ANCHOR BOLTS.

HOOKS ON "V" BARS MAY BE TURNED AS NECESAARY FOR PLACING REINFORCING STEEL.

FOR PILE SPLICE DETAILS, SEE END BENT 1 SHEET 4 OF 4.

FOR SECTION A-A, SEE SHEET 3 OF 3.

FOR VIEW C-C, SEE SHEET 2 OF 3.

** SEE SPECIAL PROVISIONS FOR APPLICATION OF BRIDGE COATING.

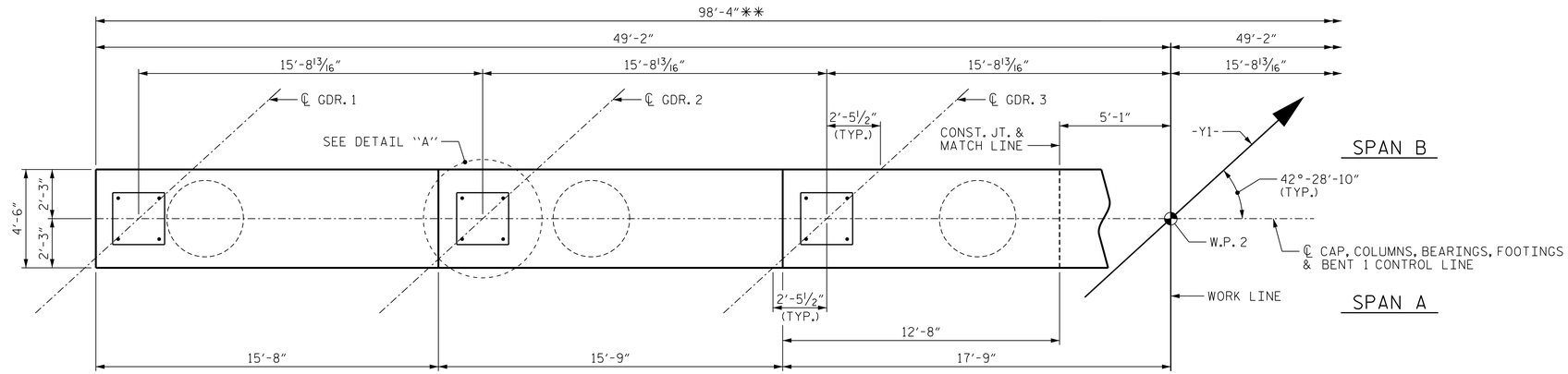

PLAN

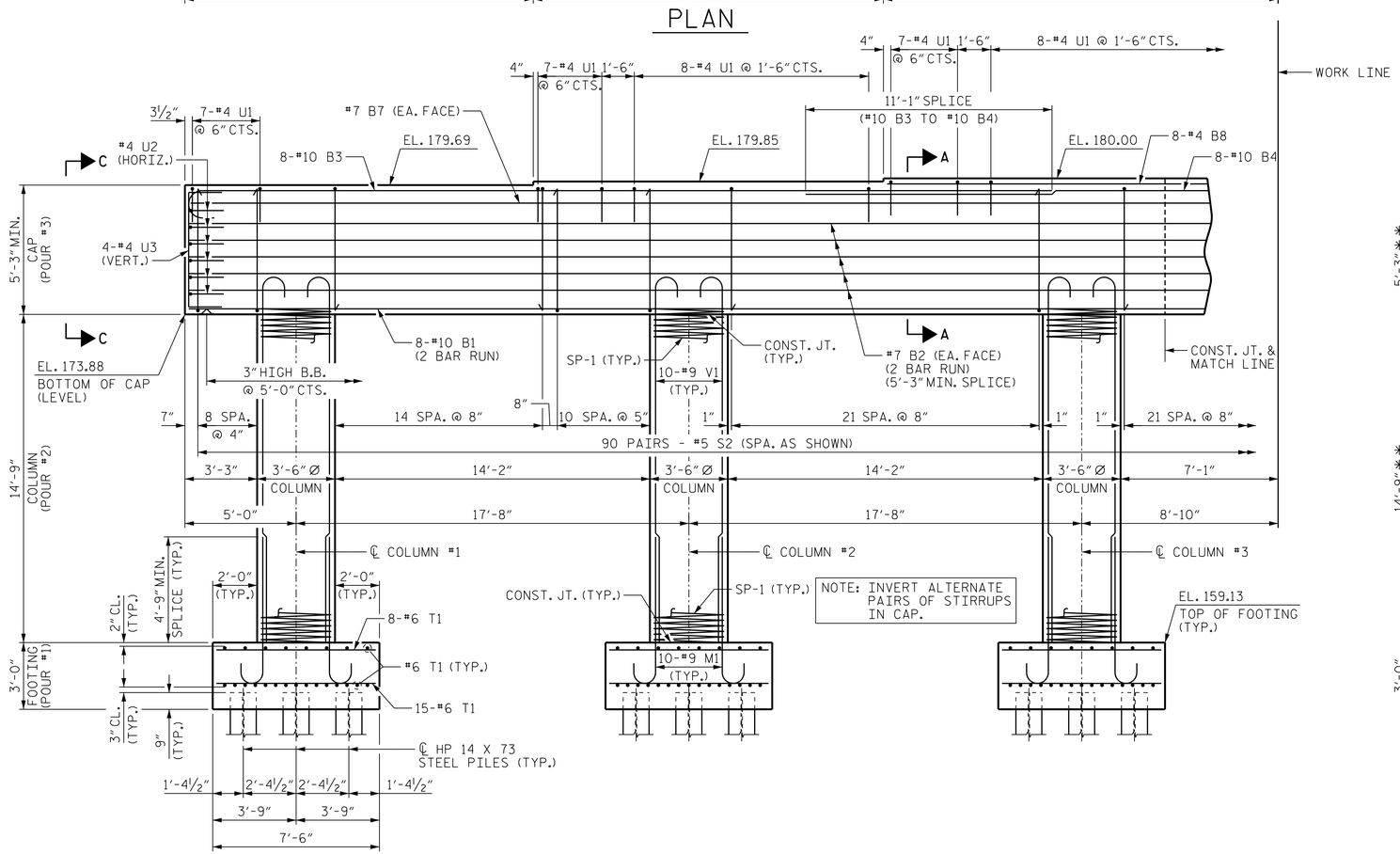

ELEVATION

REINFORCING STEEL, DIMENSIONS AND DETAILS ARE TYPICAL FOR EACH COLUMN AND FOOTING.

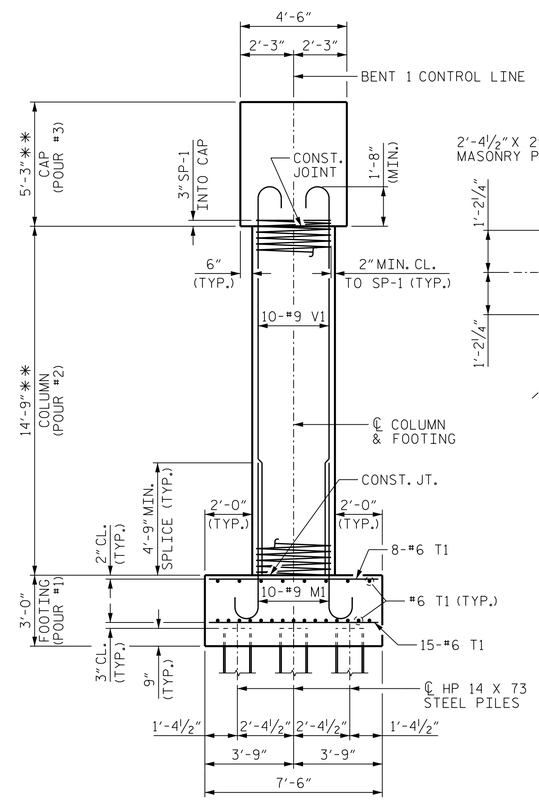

END ELEVATION

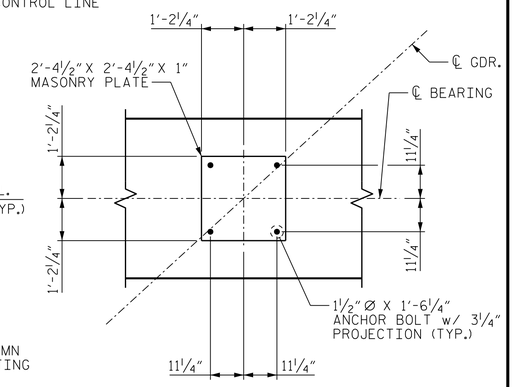

DETAIL "A"

PROJECT NO. W-5107

JOHNSTON COUNTY

STATION: 33+45.98 -L-

SHEET 1 OF 3

STATE OF NORTH CAROLINA
DEPARTMENT OF TRANSPORTATION
RALEIGH

SUBSTRUCTURE

BENT 1

NORTH CAROLINA PROFESSIONAL SEAL 027799 ENGINEER ALLYSON K. ORR

11/26/2014

MI ENGINEERING
1011 SCHAUB DRIVE, SUITE 100
RALEIGH, NC 27606
(919) 851-6606
FIRM PE NUMBER : P-0671

REVISIONS						
NO.	BY:	DATE:	NO.	BY:	DATE:	
1			3			
2			4			

SHEET NO. S-31

TOTAL SHEETS 70

DRAWN BY :	B.E. LANNING	DATE :	10/14
CHECKED BY :	G.R. COLS	DATE :	10/14
DESIGN ENGINEER OF RECORD :	A.K. ORR	DATE :	11/14

11/25/2014
2:15:08 PM
User: blanning
Filename: P:\NC Bridges\MI2005 - W-5107 Johnston Co\MI2005.01_Site 1\Structures\401_155_501_W5107_SMU_B1A.dgn