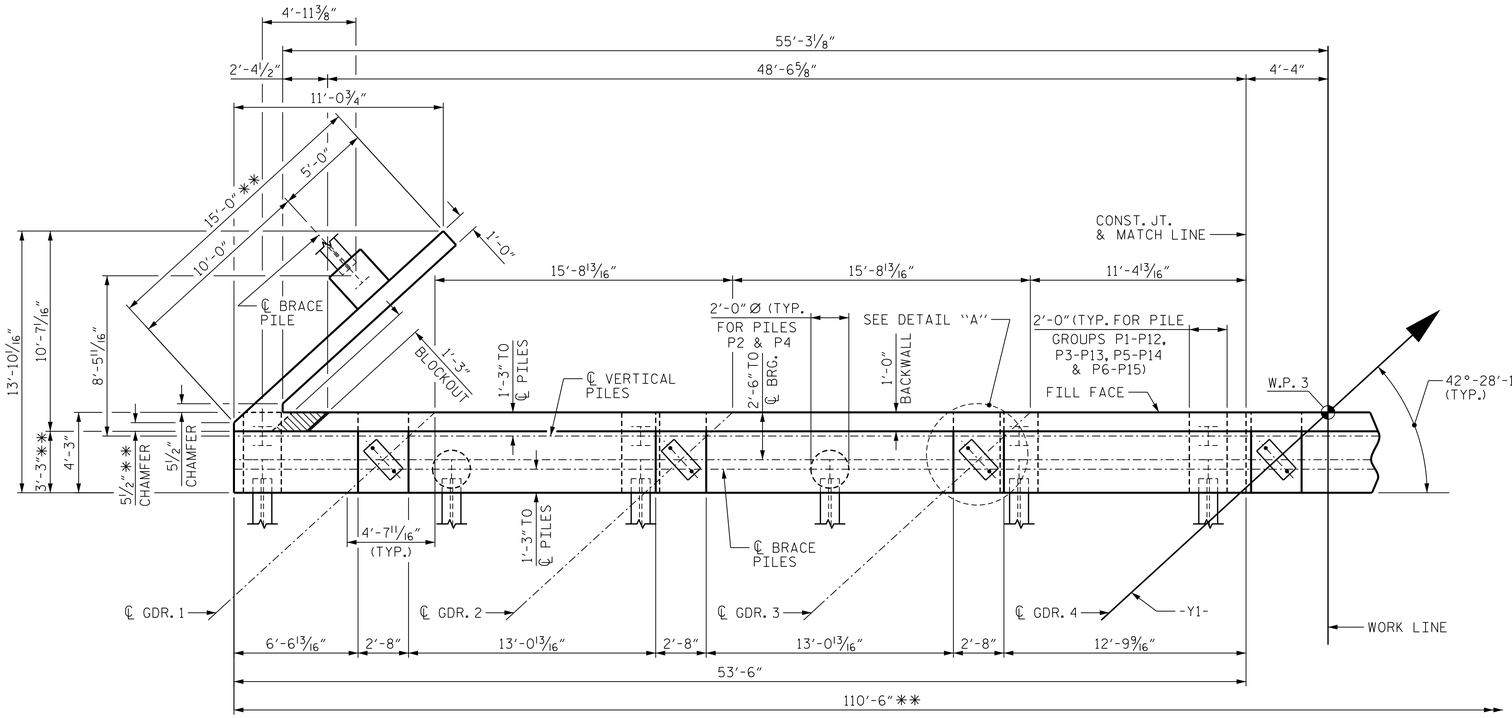

PLAN

NOTES

STIRRUPS AND #4 U2 BARS IN CAP MAY BE SHIFTED AS NECESSARY TO CLEAR ANCHOR BOLTS.

#5 V1 BARS IN BACKWALL SHALL BE PLACED 2" CLEAR FROM THE TOP OF THE BACKWALL.

BACKWALL SHALL BE PLACED BEFORE APPLYING THE EPOXY PROTECTIVE COATING.

THE TOP SURFACE AREAS OF THE END BENT CAP SHALL BE CURED IN ACCORDANCE WITH THE STANDARD SPECIFICATIONS EXCEPT THAT THE MEMBRANE CURING COMPOUND METHOD SHALL NOT BE USED.

THE TOP SURFACE OF THE CAP EXCEPT THE BRIDGE SEAT BUILDUPS SHALL BE SLOPED TRANSVERSELY FROM THE FILL FACE TO THE BACK FACE AT THE RATE OF 2%.

THE CONCRETE IN THE SHADED AREA OF THE WING SHALL BE POURED AFTER THE BARRIER RAIL IS CAST IF SLIP FORMING IS USED.

FOR SECTION A-A, SECTION B-B, SECTION D-D, PILE SPLICE DETAILS AND TEMPORARY DRAINAGE DETAILS, SEE SHEET 4 OF 4.

** SEE SPECIAL PROVISIONS FOR APPLICATION OF BRIDGE COATING.

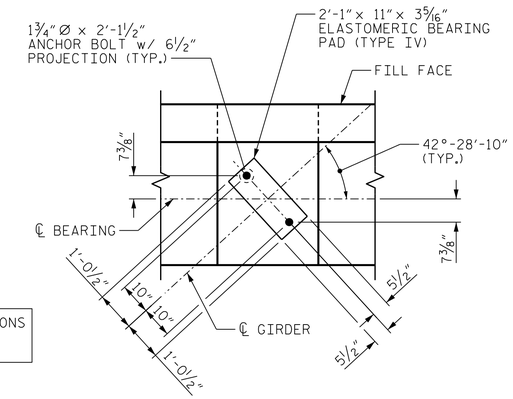

DETAIL "A"

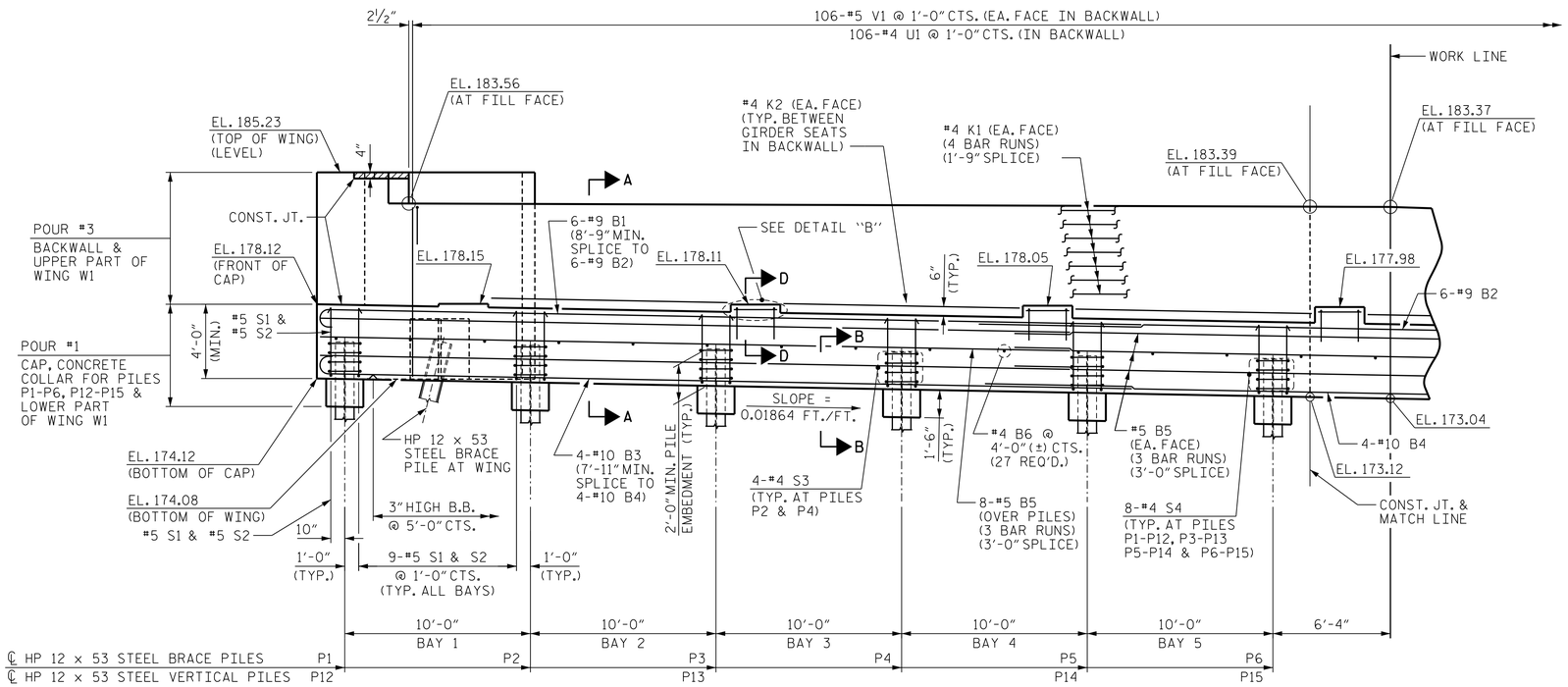

ELEVATION

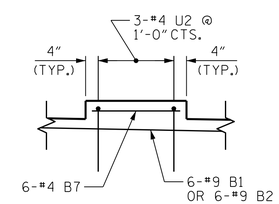

DETAIL "B"

TYPICAL FOR GIRDERS 2-6

TOP OF PILE ELEVATIONS	
PILE	ELEVATION
P1, P12	176.10
P2	175.92
P3, P13	175.73
P4	175.54
P5, P14	175.36
P6, P15	175.17

PROJECT NO. W-5107

JOHNSTON COUNTY

STATION: 33+45.98 -L-

SHEET 1 OF 4

STATE OF NORTH CAROLINA
DEPARTMENT OF TRANSPORTATION
RALEIGH

SUBSTRUCTURE

END BENT 2

NORTH CAROLINA PROFESSIONAL SEAL 027799 ENGINEER ALLYSON K. ORR

11/26/2014

MI ENGINEERING
1011 SCHAUB DRIVE, SUITE 100
RALEIGH, NC 27606
(919) 851-6606
FIRM PE NUMBER : P-0671

REVISIONS						SHEET NO.
NO.	BY:	DATE:	NO.	BY:	DATE:	S-34
1			3			TOTAL SHEETS
2			4			70

DRAWN BY : J.S. ISRAELNAIM DATE : 08/14
CHECKED BY : A.K. ORR DATE : 10/14
DESIGN ENGINEER OF RECORD : A.K. ORR DATE : 11/14

11/25/2014
2:15:14 PM
User: blanning
Filename: P:\NC Bridges\WI2005 - W-5107 Johnston Co\WI2005.01_Site 1\Structures\401_170_S01_W5107_SMU_E2A.dgn