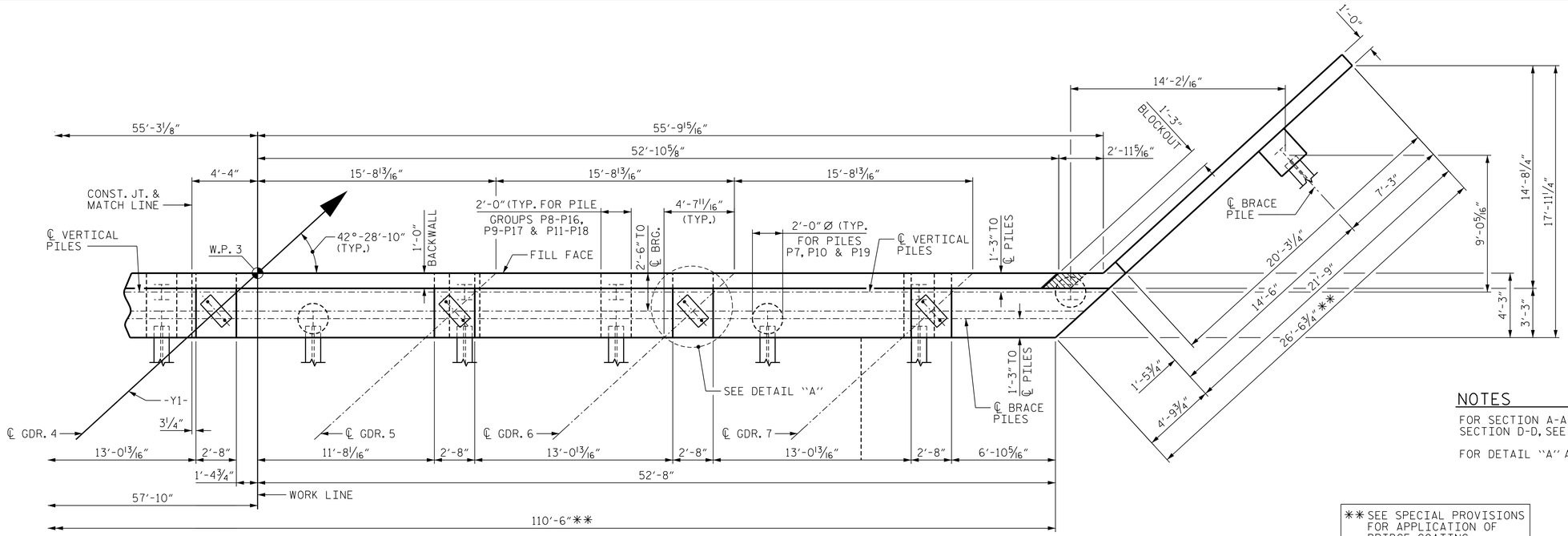

PLAN

NOTES

FOR SECTION A-A, SECTION B-B, SECTION C-C AND SECTION D-D, SEE SHEET 4 OF 4.

FOR DETAIL "A" AND DETAIL "B", SEE SHEET 1 OF 4.

** SEE SPECIAL PROVISIONS FOR APPLICATION OF BRIDGE COATING.

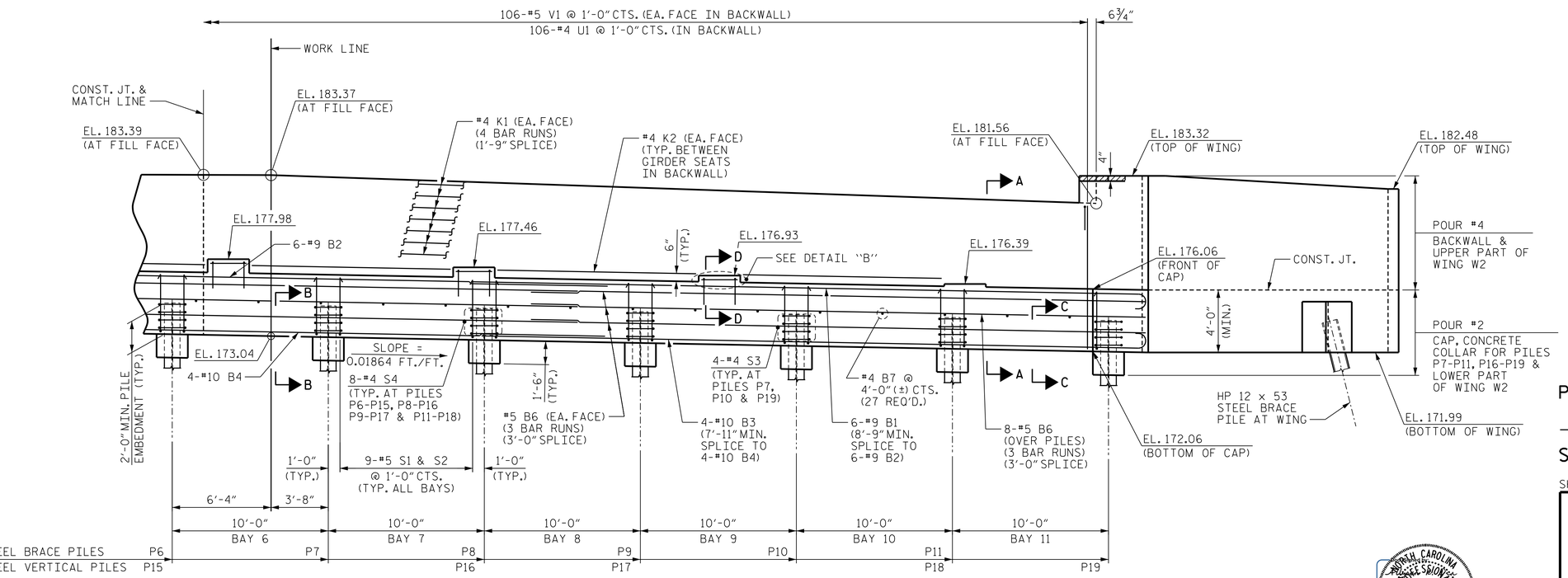

ELEVATION

TOP OF PILE ELEVATIONS	
PILE	ELEVATION
P7	174.98
P8, P16	174.80
P9, P17	174.61
P10	174.42
P11, P18	174.24
P19	174.05

PROJECT NO. W-5107

JOHNSTON COUNTY

STATION: 33+45.98 -L-

SHEET 2 OF 4

STATE OF NORTH CAROLINA
DEPARTMENT OF TRANSPORTATION
RALEIGH

SUBSTRUCTURE

END BENT 2

NORTH CAROLINA PROFESSIONAL SEAL 027799 ENGINEER ALLYSON K. ORR
11/26/2014

MI ENGINEERING
1011 SCHAUB DRIVE, SUITE 100
RALEIGH, NC 27606
(919) 851-6606
FIRM PE NUMBER : P-0671

REVISIONS								SHEET NO.
NO.	BY:	DATE:	NO.	BY:	DATE:			S-35
1			3					TOTAL SHEETS
2			4					70

DRAWN BY :	J.S. ISRAELNAIM	DATE :	08/14
CHECKED BY :	A.K. ORR	DATE :	10/14
DESIGN ENGINEER OF RECORD :	A.K. ORR	DATE :	11/14

11/25/2014
2:15:16 PM
User: blanning
Filename: P:\NC Bridges\MI2005 - W-5107 Johnston Co\MI2005.01.Site 1\Structures\401_I75_S01_W5107_SMU_E2B.dgn