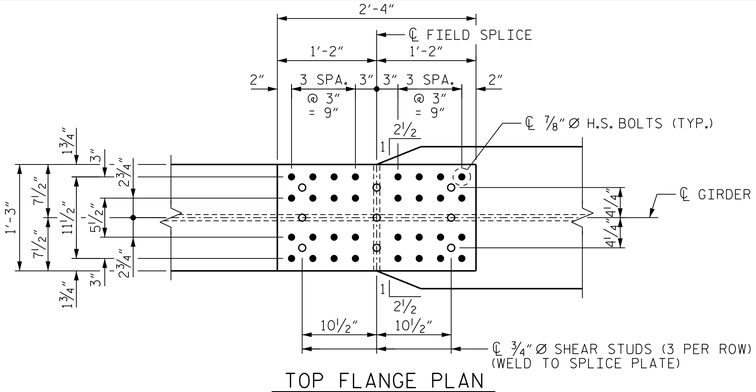

TOP FLANGE PLAN

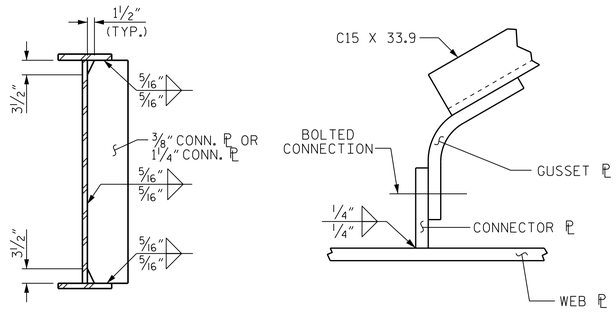

CONNECTOR PLATE WELD DETAIL

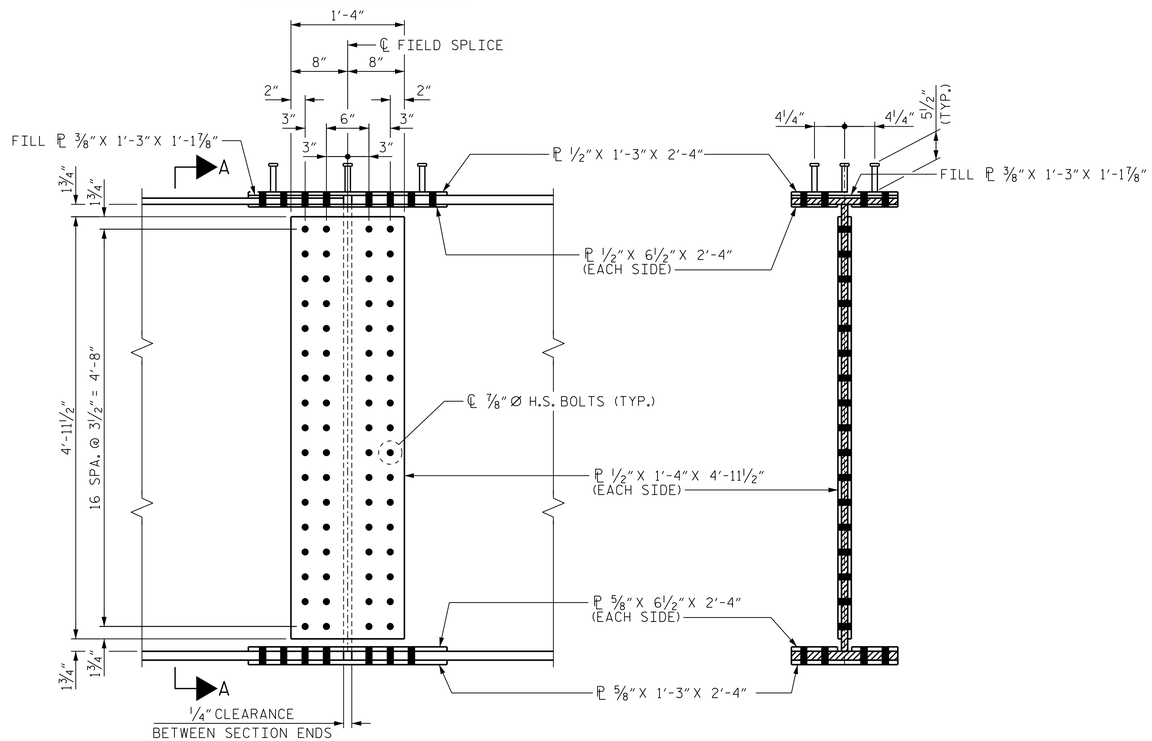

ELEVATION

SECTION A-A

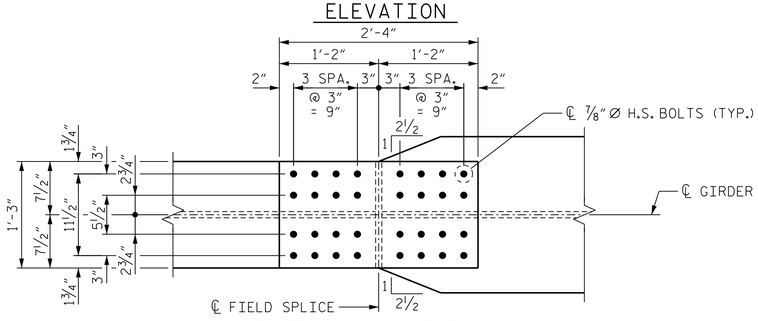

BOTTOM FLANGE PLAN

BOLTED FIELD SPLICE DETAILS

* GRIND SMOOTH AND FLUSH ON OUTER FACE OF EXTERIOR GIRDERS.

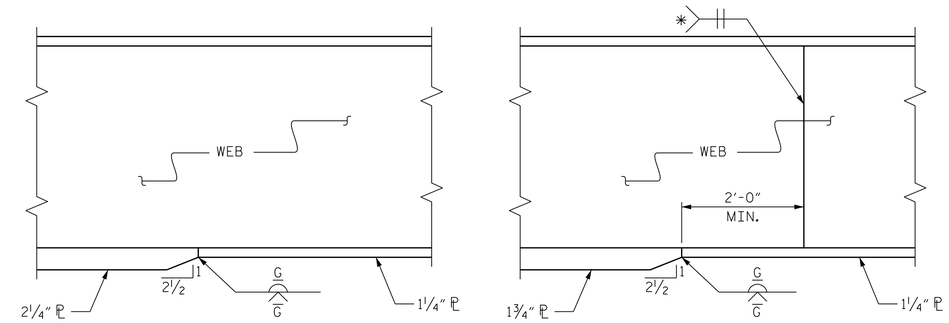

ELEVATION

TYPICAL FLANGE AND WEB BUTT JOINT

PROJECT NO. W-5107

JOHNSTON COUNTY

STATION: 33+45.98 -L-

SHEET 3 OF 4

STATE OF NORTH CAROLINA
DEPARTMENT OF TRANSPORTATION
RALEIGH

SUPERSTRUCTURE

STRUCTURAL STEEL DETAILS

NORTH CAROLINA PROFESSIONAL SEAL 027799 ENGINEER ALLYSON K. ORR
11/26/2014

DRAWN BY : B.E. LANNING DATE : 03/13
CHECKED BY : A.K. ORR DATE : 04/13
DESIGN ENGINEER OF RECORD : A.K. ORR DATE : 11/14

MI ENGINEERING
1011 SCHAUB DRIVE, SUITE 100
RALEIGH, NC 27606
(919) 851-6606
FIRM PE NUMBER : P-0671

REVISIONS						SHEET NO.
NO.	BY:	DATE:	NO.	BY:	DATE:	S-14
1			3			TOTAL SHEETS
2			4			70

11/25/2014
2:14:33 PM
User: blanning
Filename: P:\NC Bridges\MI2005 - W-5107 Johnston Co\MI2005_01_Site 1\Structures\401_070_S01_W5107_SMU_SS3.dgn