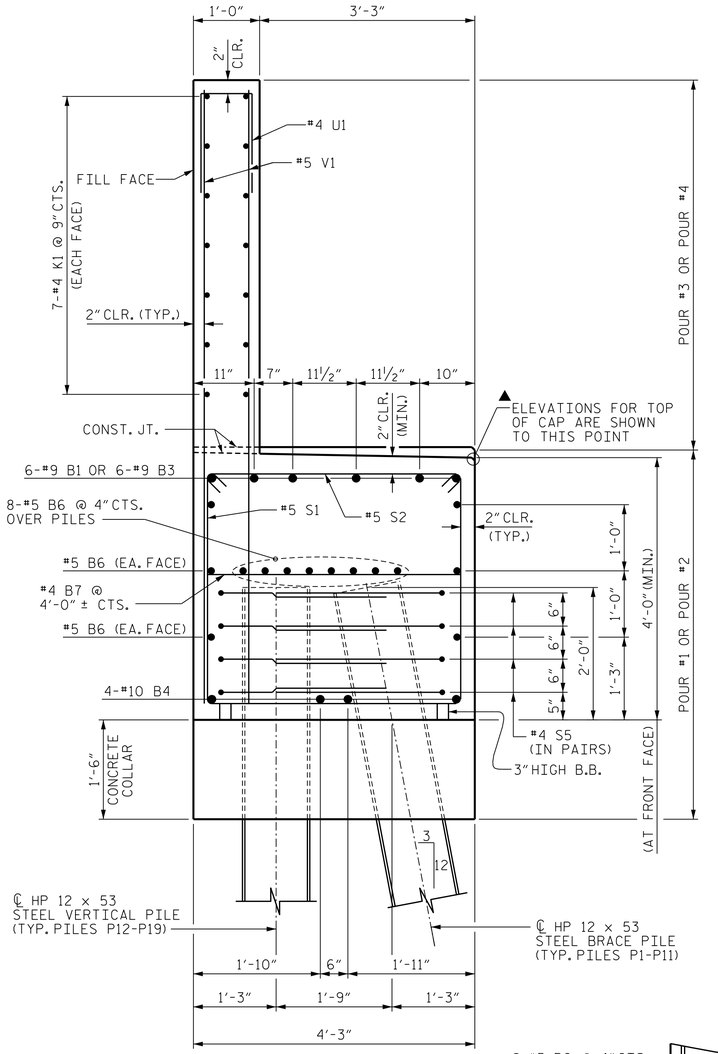

SECTION A-A

SHOWING DOUBLE PILES
(AT PILE GROUPS P1-P13, P3-P14, P4-P15, P6-P16, P7-P17, P9-P18, P11-P19)

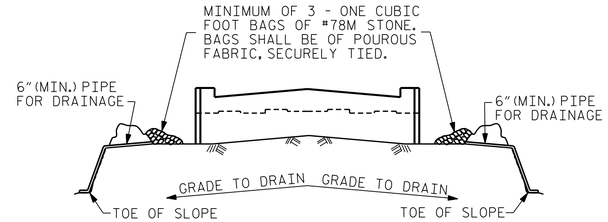

BAGGED STONE AND PIPE SHALL BE PLACED IMMEDIATELY AFTER COMPLETION OF END BENT EXCAVATION. PIPE MAY BE EITHER CONCRETE, CORRUGATED STEEL, CORRUGATED ALUMINUM ALLOY, OR CORRUGATED PLASTIC. PERFORATED PIPE WILL NOT BE ALLOWED.

BAGGED STONE SHALL REMAIN IN PLACE UNTIL THE ENGINEER DIRECTS THAT IT BE REMOVED. THE CONTRACTOR SHALL REMOVE AND DISPOSE OF SILT ACCUMULATIONS AT BAGGED STONE WHEN SO DIRECTED BY THE ENGINEER. BAGS SHALL BE REMOVED AND REPLACED WHENEVER THE ENGINEER DETERMINES THAT THEY HAVE DETERIORATED AND LOST THEIR EFFECTIVENESS.

NO SEPARATE PAYMENT WILL BE MADE FOR THIS WORK AND THE ENTIRE COST OF THIS WORK SHALL BE INCLUDED IN THE UNIT CONTRACT PRICE BID FOR THE SEVERAL PAY ITEMS.

TEMPORARY DRAINAGE AT END BENT

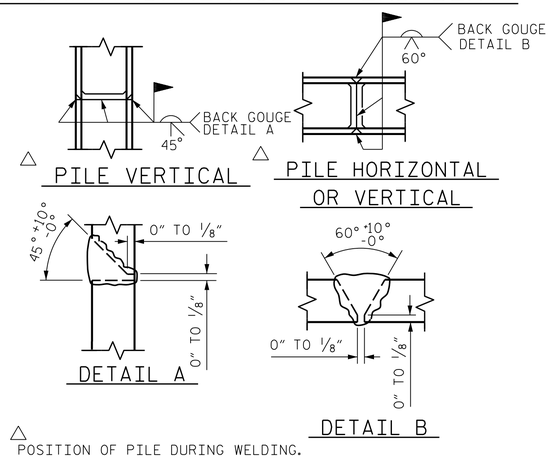

PILE SPLICE DETAILS

BAR TYPES

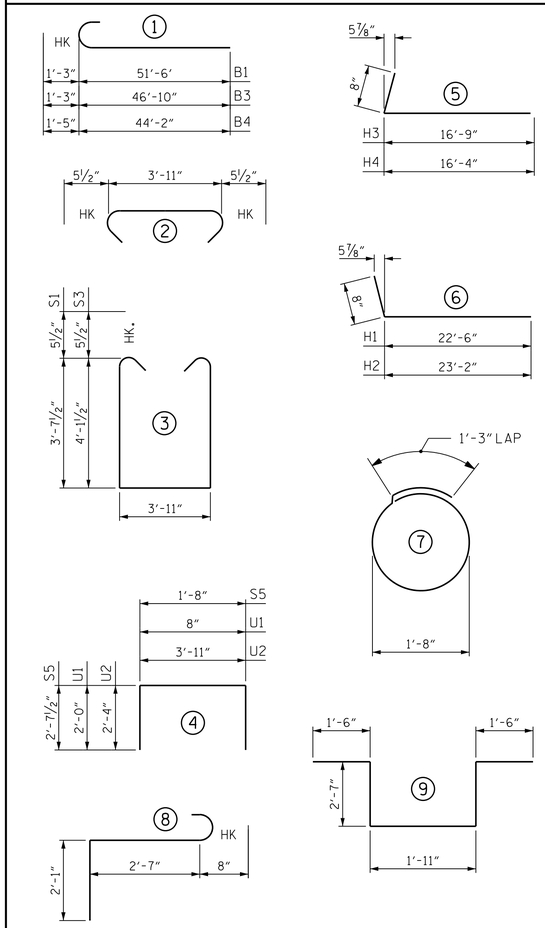

ALL BAR DIMENSIONS ARE OUT TO OUT.

BILL OF MATERIAL

END BENT 1

BAR	NO.	SIZE	TYPE	LENGTH	WEIGHT
B1	6	#9	1	52'-9"	1076
B2	6	#9	STR	33'-9"	689
B3	6	#9	1	48'-1"	981
B4	8	#10	1	45'-7"	1569
B5	4	#10	STR	41'-8"	717
B6	42	#5	STR	40'-1"	1756
B7	33	#4	STR	3'-11"	86
B8	36	#4	STR	2'-4"	56
H1	15	#4	6	23'-2"	232
H2	15	#4	6	23'-10"	239
H3	16	#4	5	17'-5"	186
H4	16	#4	5	17'-0"	182
K1	56	#4	STR	29'-10"	1116
K2	4	#4	STR	12'-8"	34
K3	2	#4	STR	5'-9"	8
K4	4	#4	STR	3'-10"	10
K5	4	#4	STR	3'-9"	10
S1	73	#5	3	12'-1"	920
S2	100	#5	2	4'-10"	504
S3	27	#5	3	13'-1"	368
S4	20	#4	7	6'-6"	87
S5	56	#4	4	6'-11"	259
S6	6	#6	8	5'-4"	48
S7	6	#6	9	10'-1"	91
U1	106	#4	4	4'-8"	330
U2	18	#4	4	8'-7"	103
V1	212	#5	STR	9'-1"	2008
V2	14	#5	STR	10'-4"	151
V3	14	#5	STR	10'-6"	153
V4	14	#5	STR	10'-8"	156
V5	11	#5	STR	10'-9"	123
V6	41	#5	STR	11'-6"	492

REINFORCING STEEL 14,740 LBS.

CLASS A CONCRETE BREAKDOWN

POUR #1 (CAP, COLLARS FOR P1-P5 & LOWER WING W1)	45.1 C.Y.
POUR #2 (CAP, COLLARS FOR P6-P10 & LOWER WING W2)	40.8 C.Y.
POUR #3 (BACKWALL & UPPER WING W1)	18.8 C.Y.
POUR #4 (BACKWALL & UPPER WING W2)	16.8 C.Y.
TOTAL CLASS A CONCRETE	121.5 C.Y.

HP 12 x 53 STEEL PILES NO. 21	1100.0 LIN. FT.
STEEL PILE POINTS	21 EACH

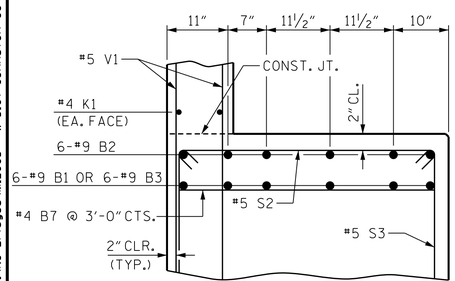

SECTION B-B

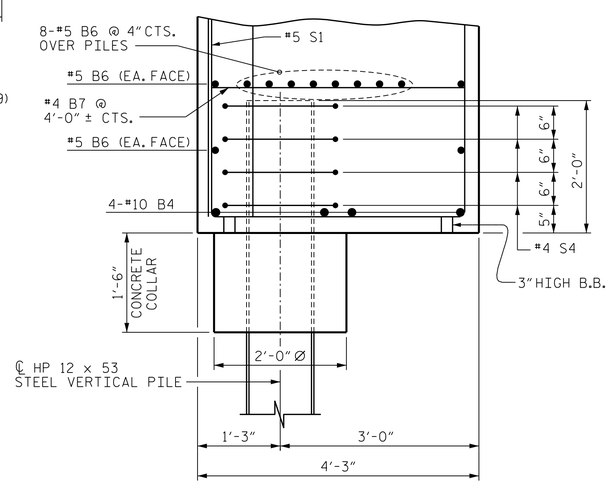

SECTION C-C

SHOWING SINGLE VERTICAL PILE P12

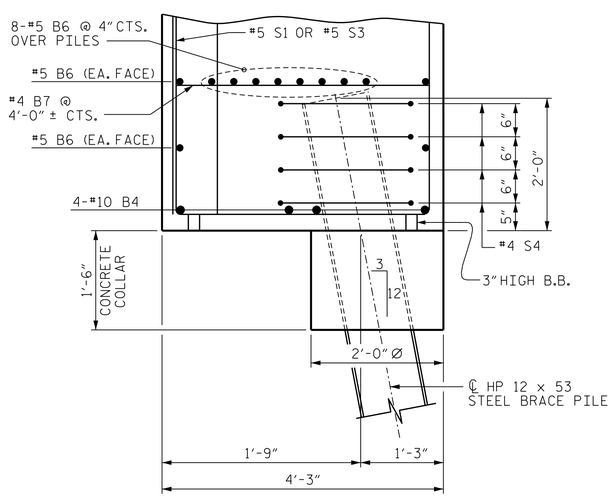

SECTION D-D

SHOWING SINGLE BRACE PILE
(TYP. PILES P2, P5, P8, & P10)

PROJECT NO. W-5107
JOHNSTON COUNTY
STATION: 33+45.98 -L-

SHEET 4 OF 4

STATE OF NORTH CAROLINA
DEPARTMENT OF TRANSPORTATION
RALEIGH

SUBSTRUCTURE

END BENT 1

NORTH CAROLINA PROFESSIONAL SEAL 027799 ENGINEER ALLYSON K. ORR
11/26/2014

MI ENGINEERING
1011 SCHAUB DRIVE, SUITE 100
RALEIGH, NC 27606
(919) 851-6606
FIRM PE NUMBER : P-0671

REVISIONS							
NO.	BY:	DATE:	NO.	BY:	DATE:	SHEET NO.	S-30
1			3			TOTAL SHEETS	70
2			4				

DRAWN BY :	J.S. ISRAELNAIM	DATE :	07/14
CHECKED BY :	A.K. ORR	DATE :	10/14
DESIGN ENGINEER OF RECORD :	A.K. ORR	DATE :	11/14

11/25/2014
2:15:06 PM
User: blanning
Filename: P:\NC Bridges\MI2005 - W-5107 Johnston Co\MI2005.01.Site 1\Structures\401_150.S01.W5107.SMU.EID.dgn