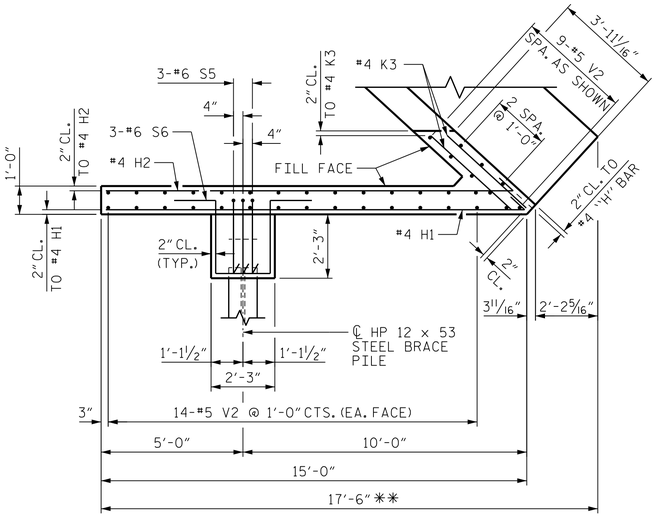

PLAN OF WING (W1)

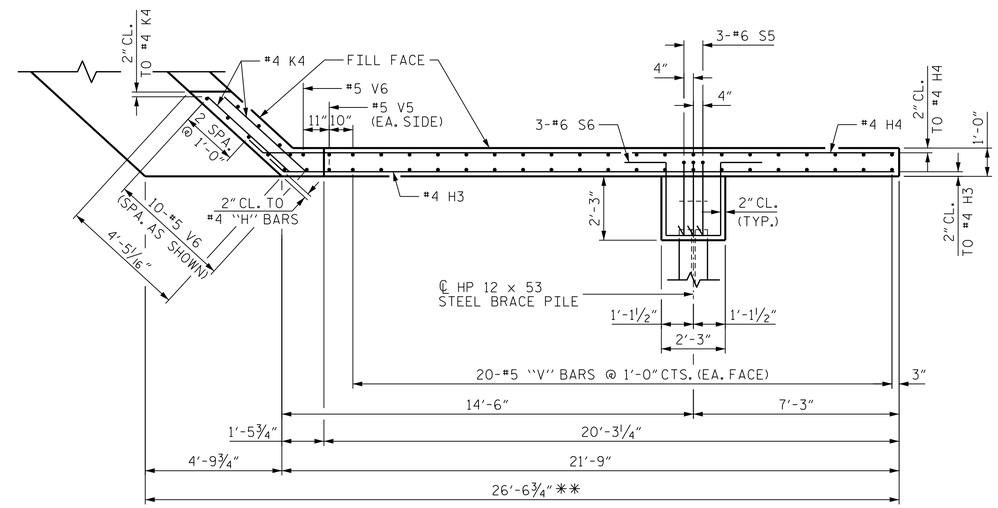

PLAN OF WING (W2)

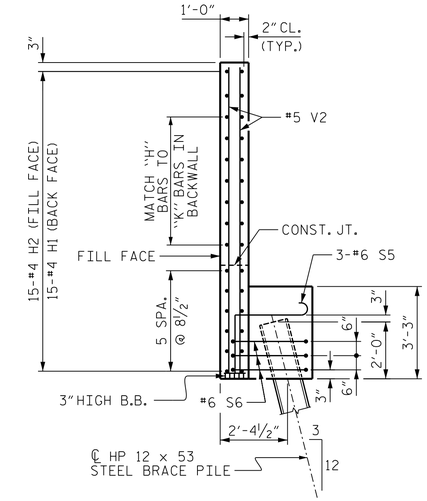

SECTION X-X

** SEE SPECIAL PROVISIONS FOR APPLICATION OF BRIDGE COATING.

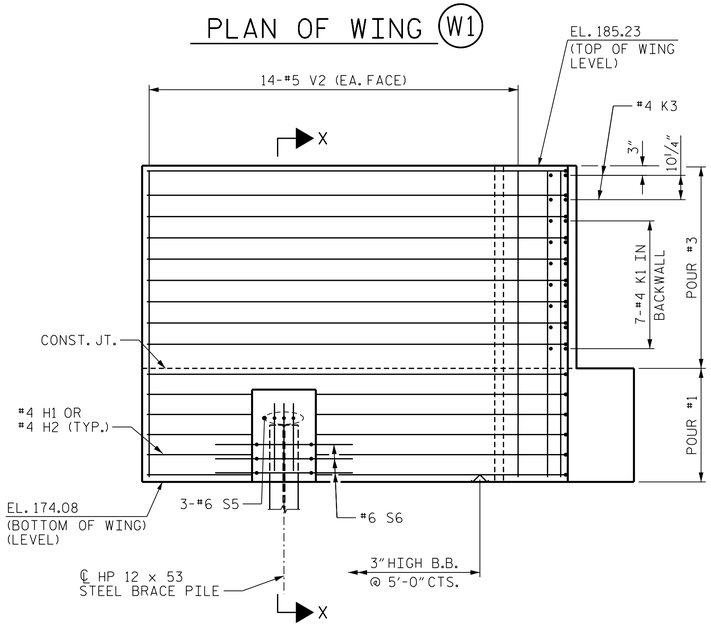

ELEVATION OF WING (W1)

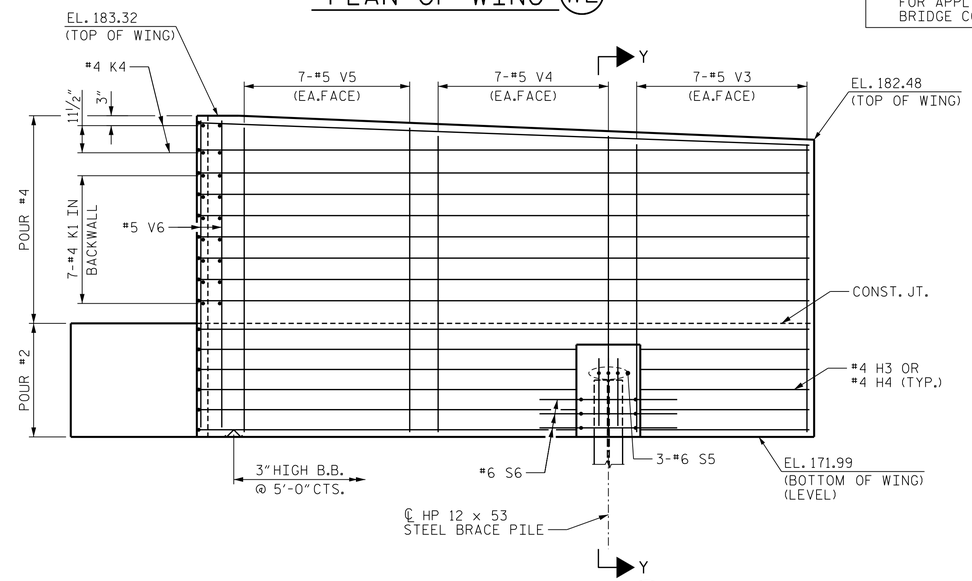

ELEVATION OF WING (W2)

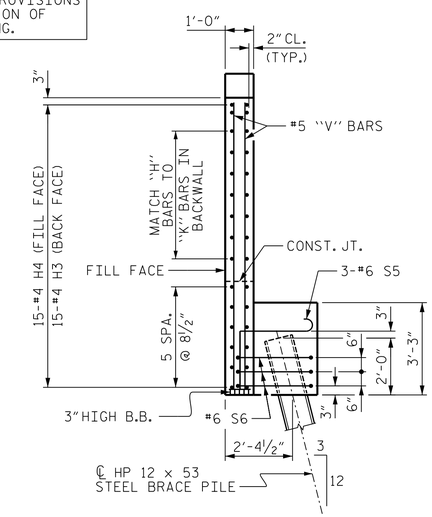

SECTION Y-Y

PROJECT NO. W-5107

JOHNSTON COUNTY

STATION: 33+45.98 -L-

SHEET 3 OF 4

STATE OF NORTH CAROLINA
DEPARTMENT OF TRANSPORTATION
RALEIGH

SUBSTRUCTURE

END BENT 2

NORTH CAROLINA PROFESSIONAL SEAL 027799 ENGINEER ALLYSON K. ORR

11/26/2014

MI ENGINEERING
1011 SCHAUB DRIVE, SUITE 100
RALEIGH, NC 27606
(919) 851-6606
FIRM PE NUMBER : P-0671

REVISIONS								SHEET NO.
NO.	BY:	DATE:	NO.	BY:	DATE:			S-36
1			3					TOTAL SHEETS
2			4					70

DRAWN BY :	J.S. ISRAELNAIM	DATE :	08/14
CHECKED BY :	A.K. ORR	DATE :	10/14
DESIGN ENGINEER OF RECORD :	A.K. ORR	DATE :	11/14

11/25/2014
2:15:19 PM
User: blanning
Filename: P:\NC Bridges\MI2005 - W-5107 Johnston Co\MI2005.01.Site 1\Structures\401.180.S01.W5107.SMU.E2C.dgn