NOTES

FOR NOTES, SEE SHEET 1 OF 4.

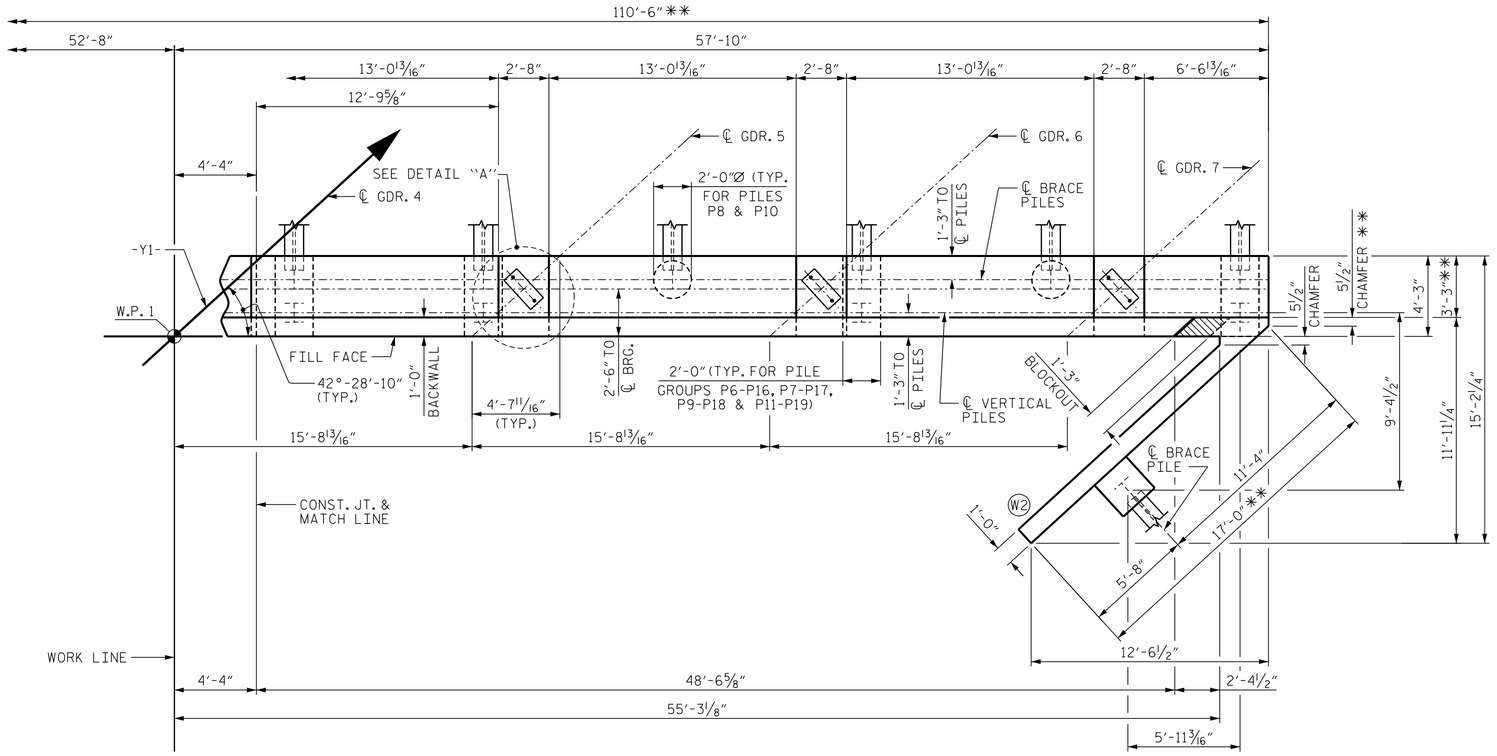

PLAN

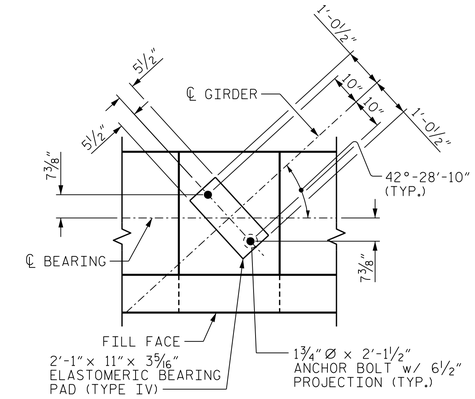

DETAIL "A"

** SEE SPECIAL PROVISIONS FOR APPLICATION OF BRIDGE COATING.

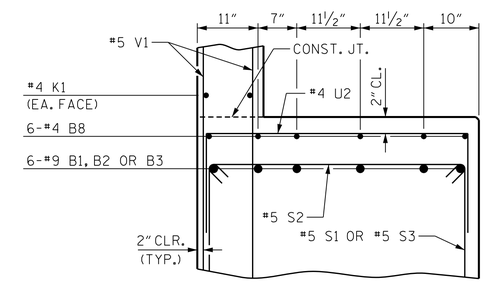

SECTION E-E

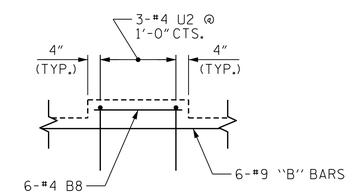

DETAIL "B"

TYPICAL FOR GIRDERS 2-7

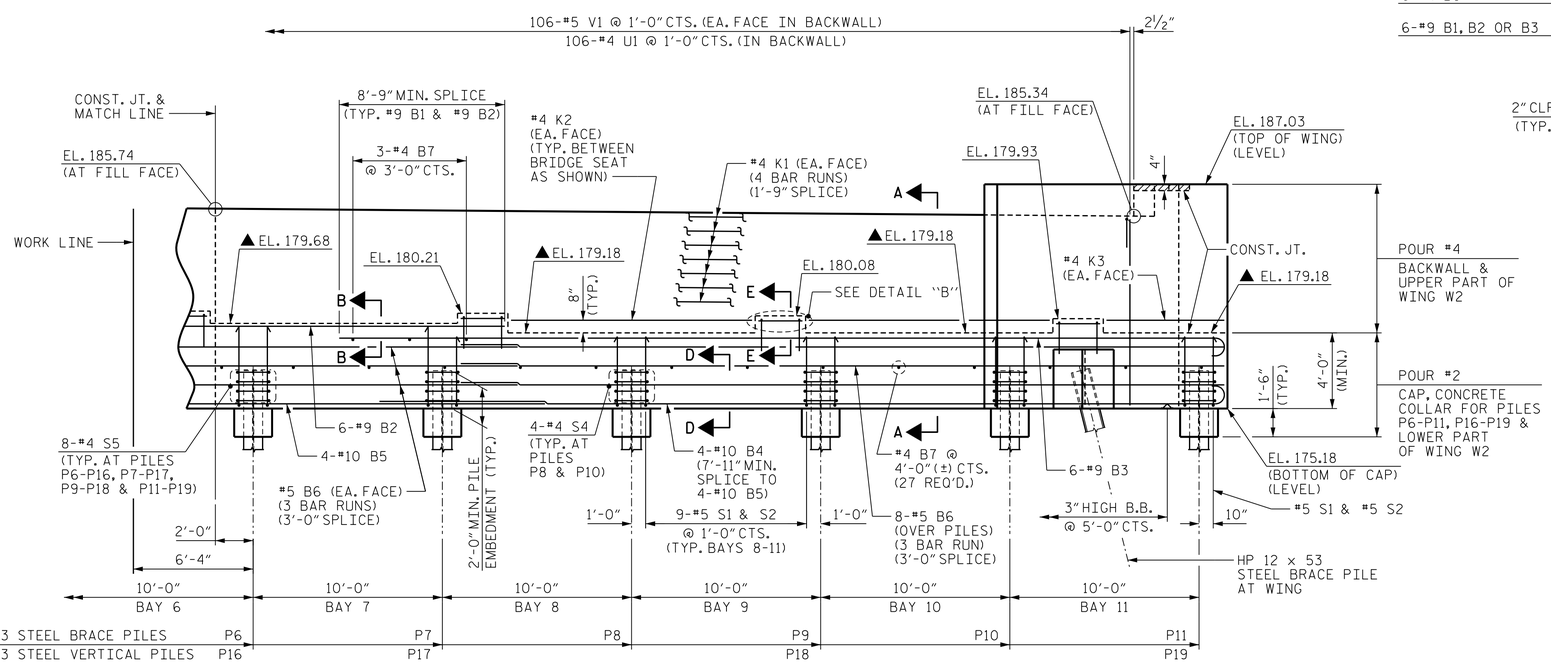

ELEVATION

PROJECT NO. W-5107

JOHNSTON COUNTY

STATION: 33+45.98 -L-

SHEET 2 OF 4

STATE OF NORTH CAROLINA
DEPARTMENT OF TRANSPORTATION
RALEIGH

SUBSTRUCTURE

END BENT 1

NORTH CAROLINA PROFESSIONAL SEAL 027799 ENGINEER ALLYSON K. ORR

11/26/2014

DRAWN BY : J.S. ISRAELNAIM DATE : 07/14
CHECKED BY : A.K. ORR DATE : 10/14
DESIGN ENGINEER OF RECORD : A.K. ORR DATE : 11/14

MI ENGINEERING
1011 SCHAUB DRIVE, SUITE 100
RALEIGH, NC 27606
(919) 851-6606
FIRM PE NUMBER : P-0671

REVISIONS							
NO.	BY:	DATE:	NO.	BY:	DATE:	SHEET NO.	
1			3			S-28	
2			4			TOTAL SHEETS	
						70	

11/25/2014
2:15:02 PM
User: planning
Filename: P:\NC Bridges\MI2005 - W-5107 Johnston Co\MI2005.01_Site 1\Structures\401.140.S01_W5107.SMU.EIB.dgn