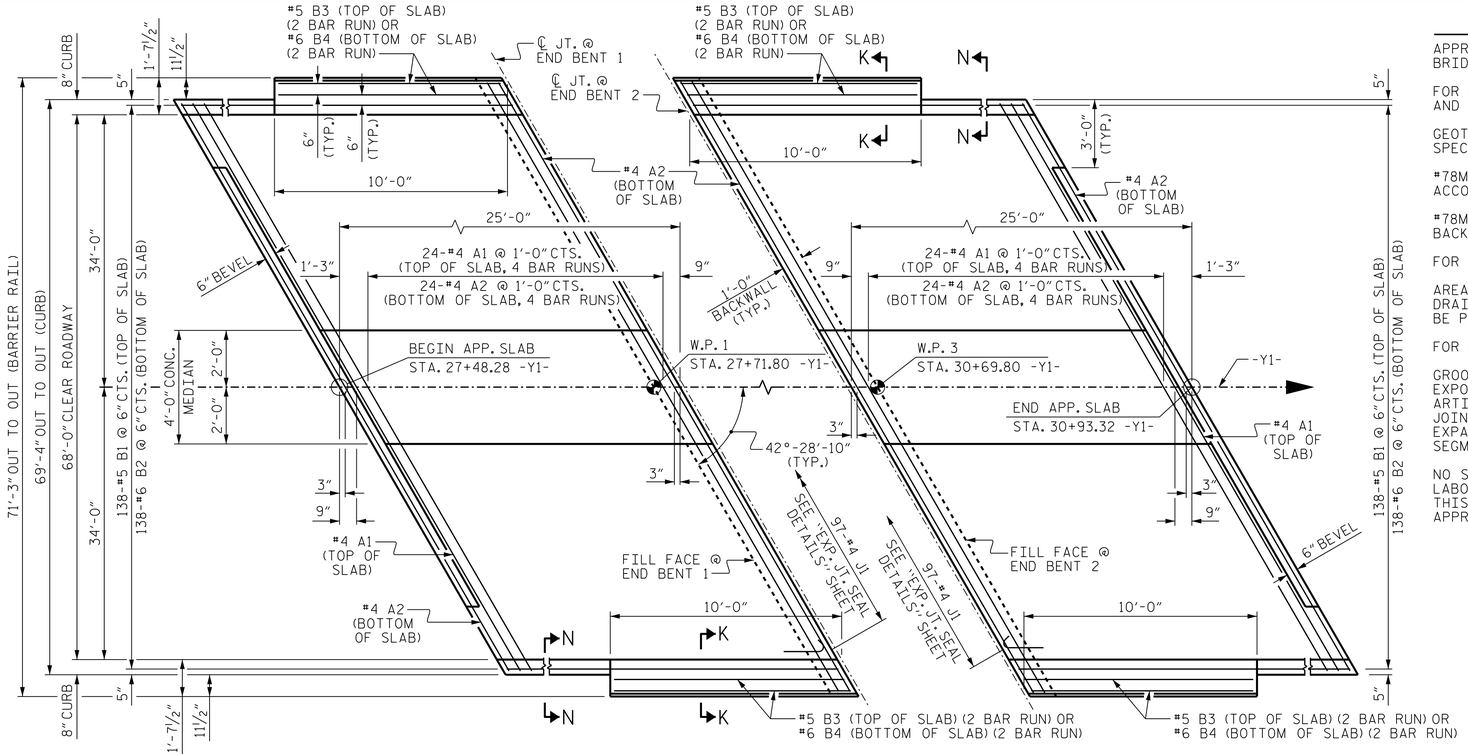

PLAN @ END BENT 1

PLAN @ END BENT 2

DIMENSIONS SHOWN ARE TYPICAL FOR BOTH APPROACH SLABS

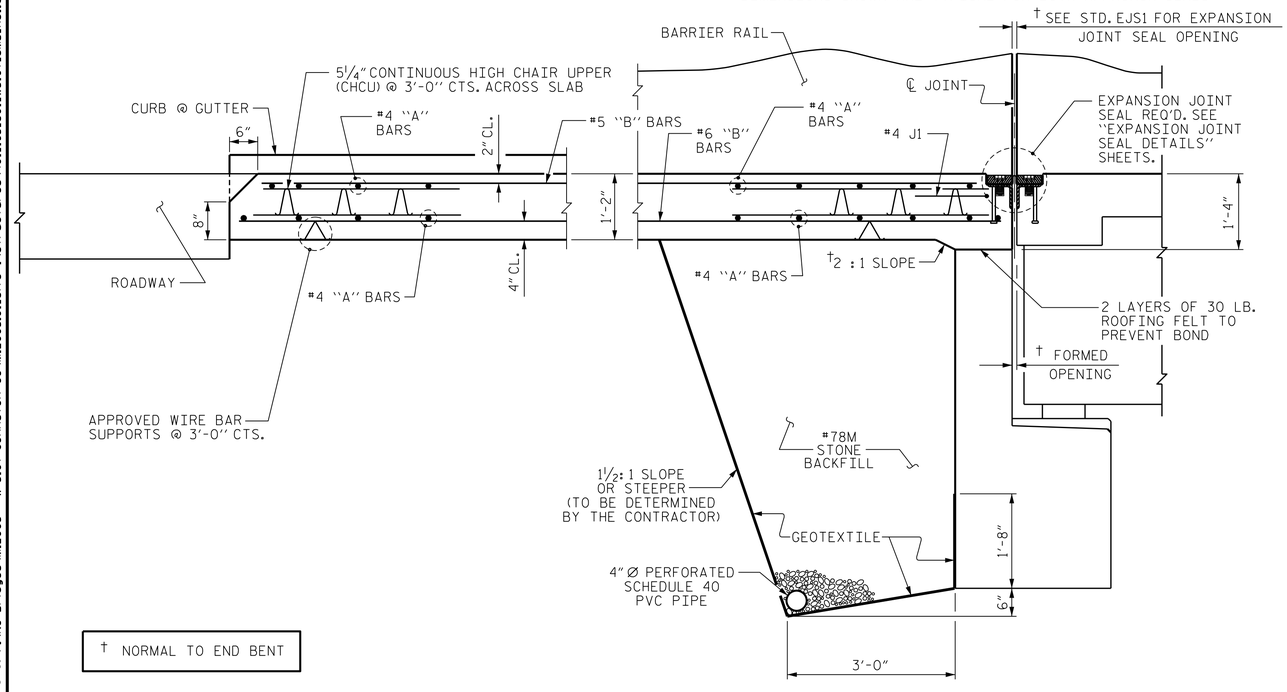

† NORMAL TO END BENT

SECTION THRU SLAB

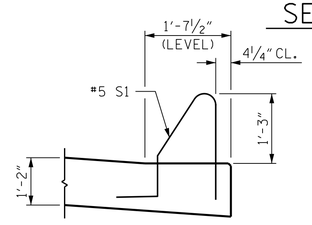

SECTION K-K

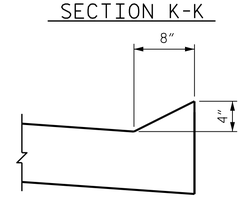

SECTION N-N

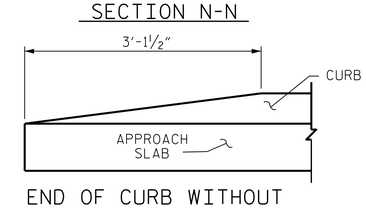

END OF CURB WITHOUT SHOULDER BERM GUTTER

CURB DETAILS

NOTES

APPROACH SLAB SHALL NOT BE CONSTRUCTED PRIOR TO COMPLETION OF THE BRIDGE DECK.

FOR BRIDGE APPROACH FILL INCLUDING GEOTEXTILE, 4" Ø DRAINAGE PIPE AND #78M STONE, SEE ROADWAY PLANS.

GEOTEXTILE SHALL BE TYPE 1 IN ACCORDANCE WITH THE STANDARD SPECIFICATIONS SECTION 1056.

#78M STONE BACKFILL (CLASS V SELECT MATERIAL) SHALL BE IN ACCORDANCE WITH STANDARD SPECIFICATIONS SECTION 1016.

#78M STONE BACKFILL IS TO BE CONTINUOUS ALONG FILL FACE OF BACKWALL FROM OUTSIDE EDGE TO OUTSIDE EDGE OF APPROACH SLAB.

FOR THE 4" Ø DRAINAGE PIPE OUTLET(S), SEE ROADWAY STANDARD DRAWINGS.

AREA BETWEEN THE WINGWALL AND APPROACH SLAB SHALL BE GRADED TO DRAIN THE WATER AWAY FROM THE FILL FACE OF THE BRIDGE AND SHALL BE PAVED. SEE ROADWAY PLANS.

FOR EXPANSION JOINT SEALS, SEE SPECIAL PROVISIONS.

GROOVED CONTRACTION JOINTS, ½" IN DEPTH SHALL BE TOOLED IN ALL EXPOSED FACES OF THE CONCRETE MEDIAN IN ACCORDANCE WITH ARTICLE 825-10(B) OF THE STANDARD SPECIFICATIONS. THE CONTRACTION JOINTS SHALL BE LOCATED THE SPACING OF 8 FT. TO 10 FT. BETWEEN EXPANSION JOINTS. NO CONTRACTIONS JOINTS WILL BE REQUIRED FOR SEGMENTS LESS THAN 10 FT. IN LENGTH.

NO SEPARATE MEASUREMENT OR PAYMENT WILL BE MADE FOR MATERIALS OR LABOR REQUIRED TO CONSTRUCT THE CONCRETE MEDIAN. THE ENTIRE COST OF THIS WORK SHALL BE INCLUDED IN THE LUMP SUM PRICE BID FOR BRIDGE APPROACH SLAB.

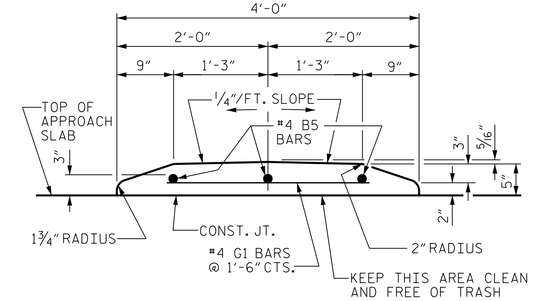

SECTION THRU CONCRETE MEDIAN

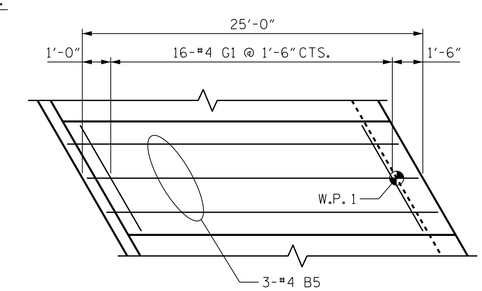

PLAN OF CONCRETE MEDIAN

BILL OF MATERIAL

APPROACH SLAB (2 REQ'D.)

BAR	NO.	SIZE	TYPE	LENGTH	WEIGHT
✱ A1	100	#4	STR	27'-10"	1859
A2	104	#4	STR	27'-8"	1922
✱ B1	138	#5	STR	23'-4"	3358
B2	138	#6	STR	24'-6"	5078
✱ B3	8	#5	STR	6'-9"	56
B4	8	#6	STR	6'-9"	81
✱ B5	3	#4	STR	23'-8"	47
✱ G1	16	#4	STR	4'-0"	43
✱ J1	97	#4	1	1'-5"	92
REINFORCING STEEL ✱✱				LBS.	7081
✱ EPOXY COATED REINFORCING STEEL ✱✱				LBS.	5455
CLASS AA CONCRETE					
APPROACH SLAB				C. Y.	76.1
MEDIAN				C. Y.	1.4
TOTAL ✱✱				C. Y.	77.5

BAR TYPE

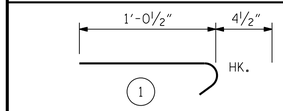

ALL BAR DIMENSIONS ARE OUT TO OUT

✱✱ QUANTITIES FOR BARRIER RAIL ARE NOT INCLUDED. SEE SHEET 2 OF 2.

THE QUANTITY OF #4 J1 BARS ON THE BILL OF MATERIAL IS BASED ON 1'-0" CENTERS. J1 BARS SHALL BE PLACED AT EACH VERTICAL STUD ANCHOR BOLT. IN THE EVENT THAT THE NUMBER OF VERTICAL STUD ANCHORS EXCEEDS THE NUMBER OF J1 BARS SPECIFIED, ADDITIONAL J1 BARS WILL NOT BE REQUIRED.

SPLICE LENGTHS

BAR SIZE	EPOXY COATED	UNCOATED
#4	2'-0"	1'-9"
#5	2'-6"	2'-2"
#6	3'-10"	2'-7"

PROJECT NO. W-5107

JOHNSTON COUNTY

STATION: 33+45.98 -L-

SHEET 1 OF 2

STATE OF NORTH CAROLINA
DEPARTMENT OF TRANSPORTATION
RALEIGH

BRIDGE APPROACH SLAB FOR FLEXIBLE PAVEMENT

NORTH CAROLINA PROFESSIONAL SEAL 027799 ENGINEER ALLYSON K. ORR
12/11/2014

MI ENGINEERING
1011 SCHAUB DRIVE, SUITE 100
RALEIGH, NC 27606
(919) 851-6606
FIRM PE NUMBER : P-0671

REVISIONS							
NO.	BY:	DATE:	NO.	BY:	DATE:	SHEET NO.	
1			3			S-39	
2			4			TOTAL SHEETS	70

DRAWN BY :	B.E. LANNING	DATE :	07/13
CHECKED BY :	G.R. COLS	DATE :	08/14
DESIGN ENGINEER OF RECORD :	A.K. ORR	DATE :	11/14

12/11/2014
1:36:47 PM
User: blanning
Filename: P:\NC Bridges\MI2005 - W-5107 Johnston Co\MI2005.01_Site 1\Structures\401_195_S01_W5107_SMU_AS1.dgn