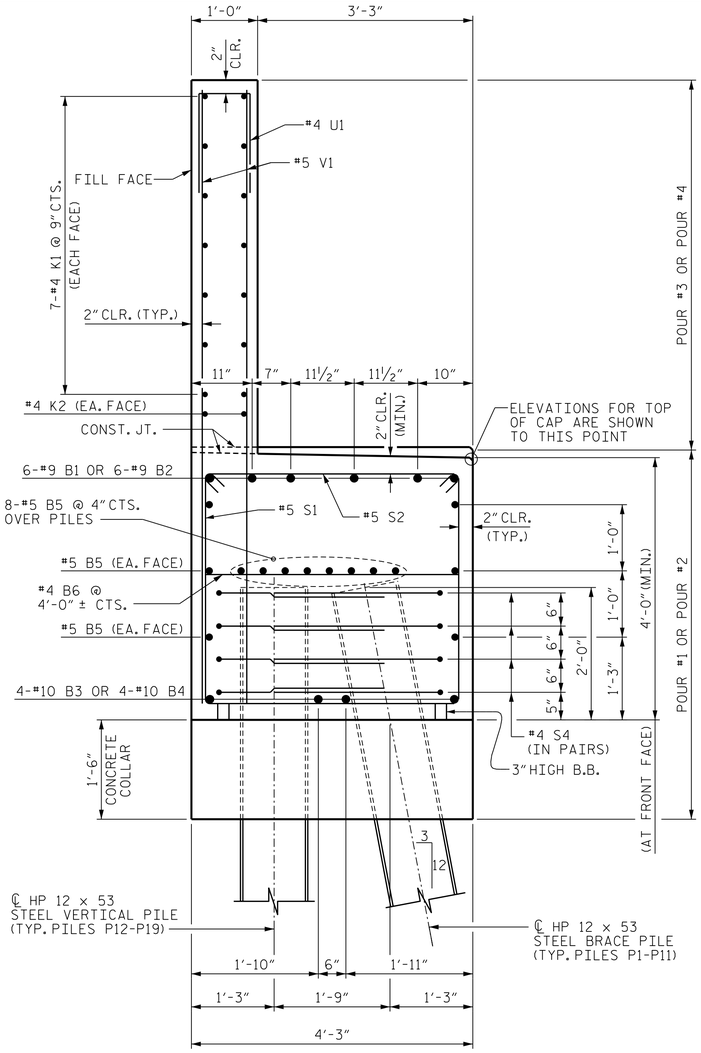

SECTION A-A

SHOWING DOUBLE PILES
(AT PILE GROUPS P1-P12, P3-P13, P5-P14, P6-P15, P8-P16, P9-P17, P11-P18)

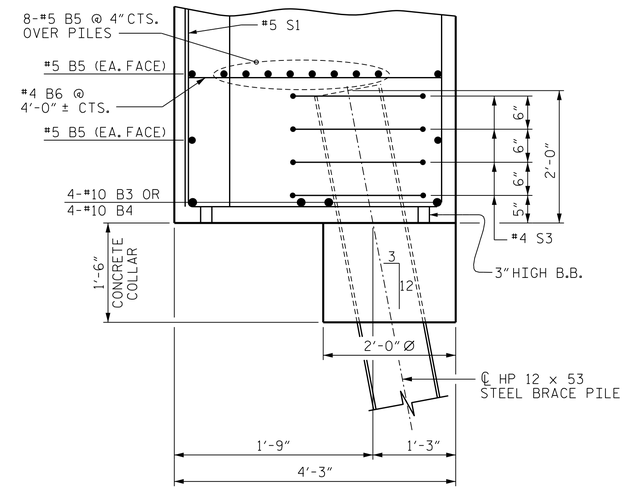

SECTION B-B

SHOWING SINGLE BRACE PILE
(TYP. PILES P2, P4, P7 & P10)

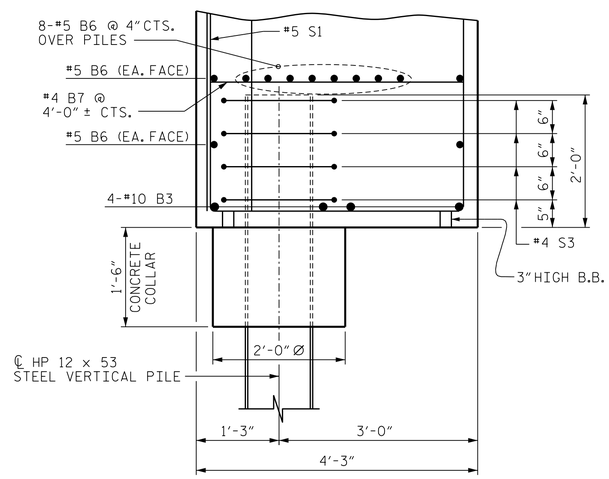

SECTION C-C

SHOWING SINGLE VERTICAL PILE P19

BAR TYPES

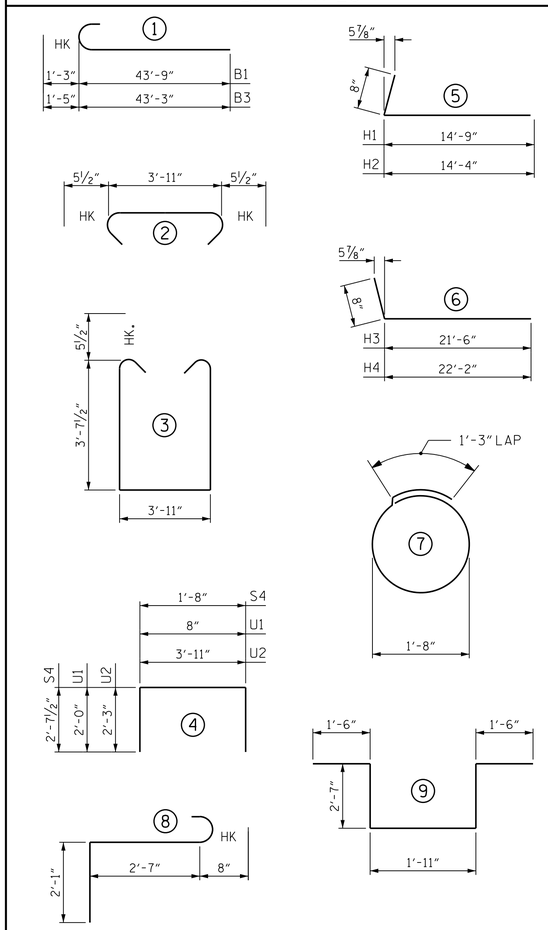

ALL BAR DIMENSIONS ARE OUT TO OUT.

BILL OF MATERIAL

END BENT 2

BAR	NO.	SIZE	TYPE	LENGTH	WEIGHT
B1	12	#9	1	45'-0"	1836
B2	6	#9	STR	44'-1"	899
B3	8	#10	1	44'-8"	1538
B4	4	#10	STR	43'-5"	747
B5	42	#5	STR	40'-1"	1756
B6	27	#4	STR	3'-11"	71
B7	30	#4	STR	2'-4"	47
H1	15	#4	5	15'-5"	154
H2	15	#4	5	15'-0"	150
H3	15	#4	6	22'-2"	222
H4	15	#4	6	22'-10"	229
K1	56	#4	STR	29'-10"	1116
K2	12	#4	STR	12'-8"	102
K3	4	#4	STR	3'-9"	10
K4	4	#4	STR	3'-10"	10
S1	100	#5	3	12'-1"	1260
S2	100	#5	2	4'-10"	504
S3	20	#4	7	6'-6"	87
S4	56	#4	4	6'-11"	259
S5	6	#6	8	5'-4"	48
S6	6	#6	9	10'-1"	91
U1	106	#4	4	4'-8"	330
U2	15	#4	4	8'-5"	84
V1	212	#5	STR	9'-1"	2008
V2	37	#5	STR	10'-9"	415
V3	14	#5	STR	10'-2"	148
V4	14	#5	STR	10'-5"	152
V5	14	#5	STR	10'-9"	157
V6	11	#5	STR	10'-11"	125

REINFORCING STEEL 14,555 LBS.

CLASS A CONCRETE BREAKDOWN

POUR #1 (CAP, COLLARS FOR P1-P5 & LOWER WING W1)	38.9 C.Y.
POUR #2 (CAP, COLLARS FOR P6-P10 & LOWER WING W2)	43.7 C.Y.
POUR #3 (BACKWALL & UPPER WING W1)	15.3 C.Y.
POUR #4 (BACKWALL & UPPER WING W2)	18.9 C.Y.
TOTAL CLASS A CONCRETE	116.8 C.Y.

HP 12 x 53 STEEL PILES NO. 21	1100.0 LIN. FT.
STEEL PILE POINTS	21 EACH

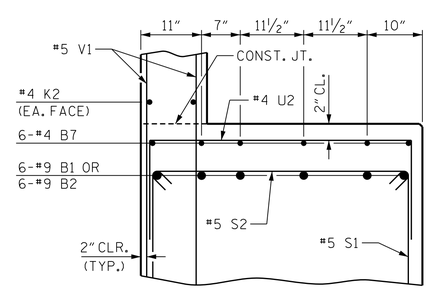

SECTION D-D

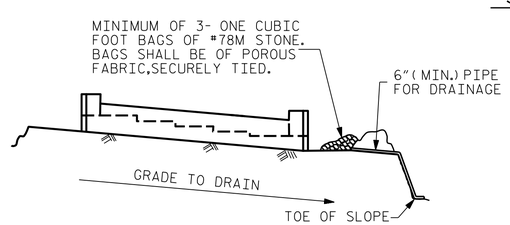

BAGGED STONE AND PIPE SHALL BE PLACED IMMEDIATELY AFTER COMPLETION OF END BENT EXCAVATION. PIPE MAY BE EITHER CONCRETE, CORRUGATED STEEL, CORRUGATED ALUMINUM ALLOY, OR CORRUGATED PLASTIC. PERFORATED PIPE WILL NOT BE ALLOWED.

BAGGED STONE SHALL REMAIN IN PLACE UNTIL THE ENGINEER DIRECTS THAT IT BE REMOVED. THE CONTRACTOR SHALL REMOVE AND DISPOSE OF SILT ACCUMULATIONS AT BAGGED STONE WHEN SO DIRECTED BY THE ENGINEER. BAGS SHALL BE REMOVED AND REPLACED WHENEVER THE ENGINEER DETERMINES THAT THEY HAVE DETERIORATED AND LOST THEIR EFFECTIVENESS.

NO SEPARATE PAYMENT WILL BE MADE FOR THIS WORK AND THE ENTIRE COST OF THIS WORK SHALL BE INCLUDED IN THE UNIT CONTRACT PRICE BID FOR THE SEVERAL PAY ITEMS.

TEMPORARY DRAINAGE AT END BENT

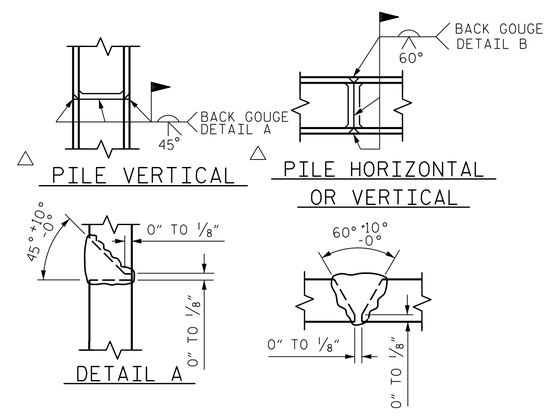

△ POSITION OF PILE DURING WELDING.

PILE SPLICE DETAILS

PROJECT NO. W-5107
JOHNSTON COUNTY
STATION: 33+45.98 -L-

SHEET 4 OF 4

STATE OF NORTH CAROLINA
DEPARTMENT OF TRANSPORTATION
RALEIGH

SUBSTRUCTURE

END BENT 2

NORTH CAROLINA PROFESSIONAL SEAL 027799 ENGINEER ALLYSON K. ORR
11/26/2014

MI ENGINEERING
1011 SCHAUB DRIVE, SUITE 100
RALEIGH, NC 27606
(919) 851-6606
FIRM PE NUMBER : P-0671

REVISIONS								SHEET NO.
NO.	BY:	DATE:	NO.	BY:	DATE:			S-37
1			3					TOTAL SHEETS
2			4					70

DRAWN BY :	J.S. ISRAELNAIM	DATE :	08/14
CHECKED BY :	A.K. ORR	DATE :	10/14
DESIGN ENGINEER OF RECORD :	A.K. ORR	DATE :	11/14

11/25/2014
2:15:21 PM
User: blanning
Filename: P:\NC Bridges\W12005 - W-5107 Johnston Co\W12005_01_Site 1\Structures\401_I85_S01_W5107_SMU_E2D.dgn