PROJECT REFERENCE NO.	SHEET NO.
W-5107	Sig. M4

Fabrication Details – Mast Arm Poles

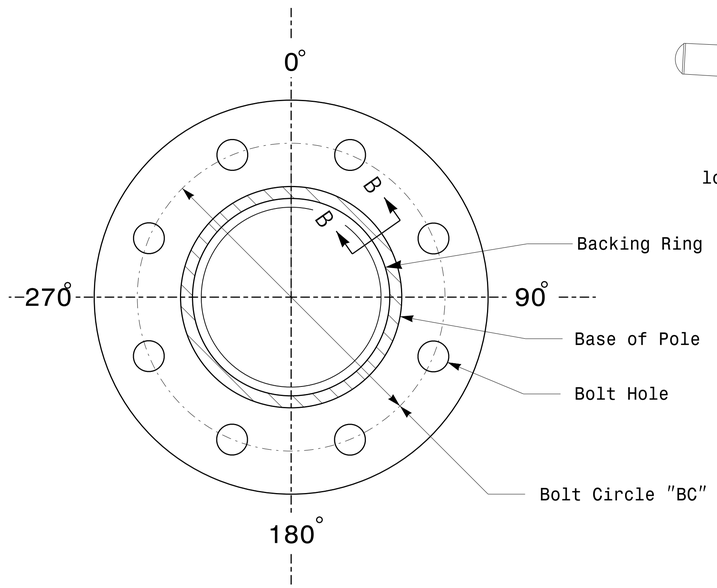

Section A-A

(See drawing M 2)

Pole Base Plate

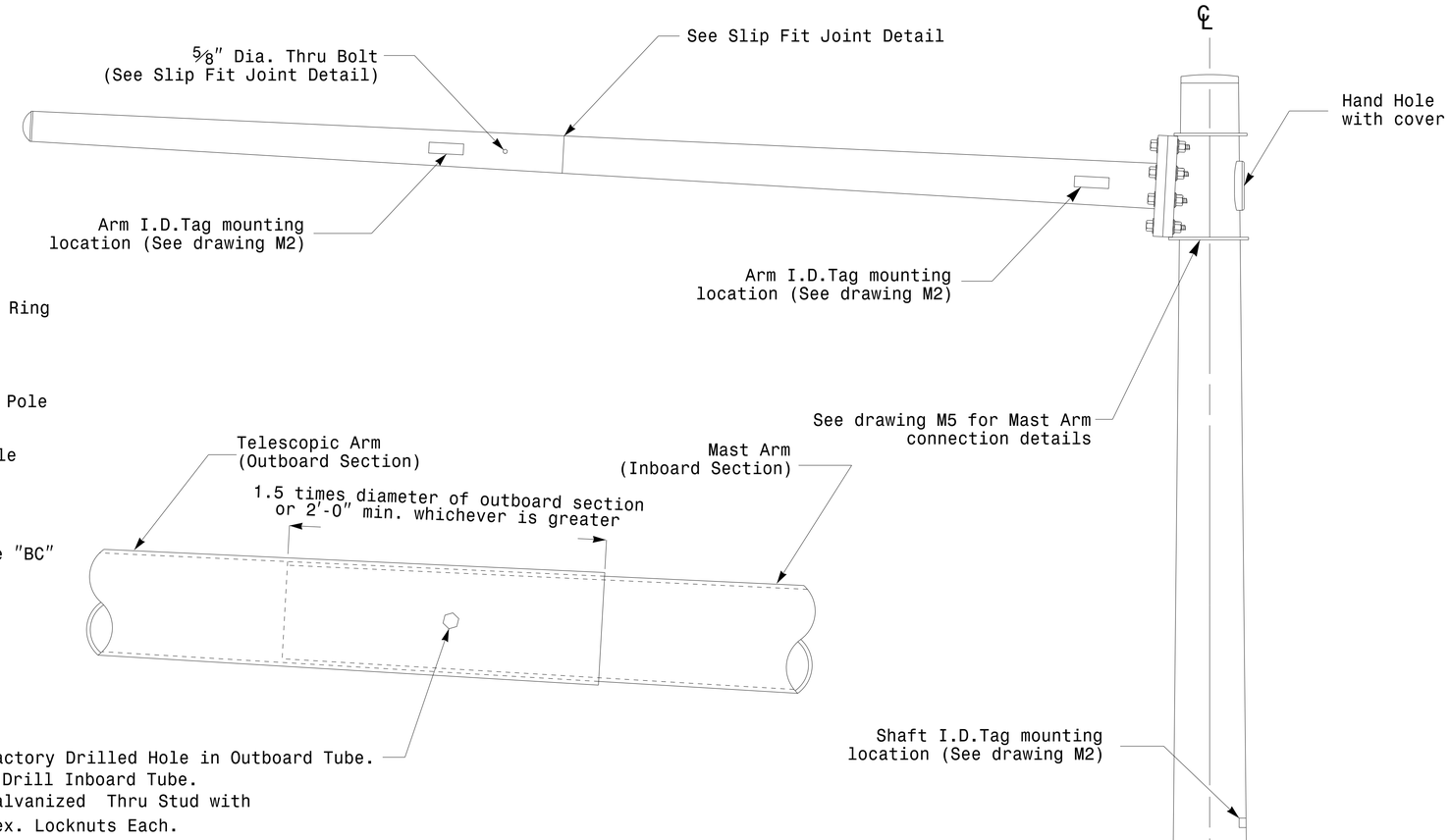

Slip Fit Joint Detail for Mast Arm

Monotube Mast Arm Pole
(.14in./ft. taper)

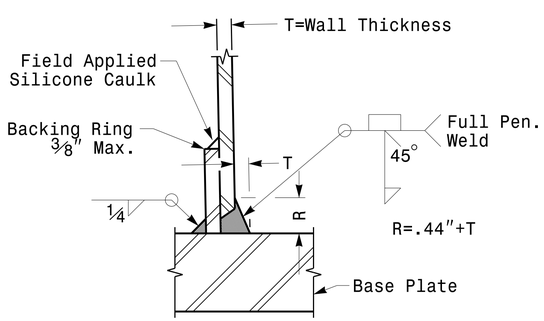

Section B-B

(Pole Attachment to Base Plate)

Full-Penetration Groove Weld Detail

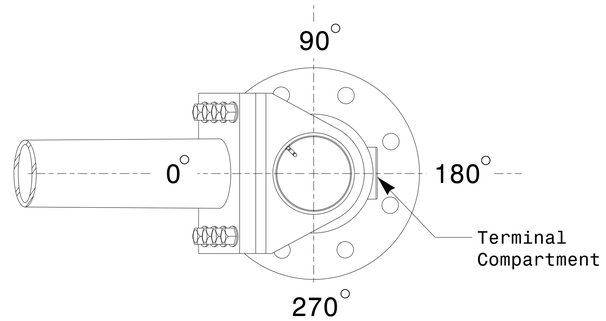

Mast Arm Radial Orientation

Prepared in the Offices of:
Transportation Mobility and Safety Division
Signal Design Section
750 N.Greenfield Pkwy.Garner,NC 27529

Typical Fabrication Details
for Mast Arm Poles

PLAN DATE:	AUGUST 2013	DESIGNED BY:	C.F. ANDREWS
PREPARED BY:	N. BITTING	REVIEWED BY:	D.C. SARKAR

SCALE 0 NA NONE

REVISIONS	INIT.	DATE

SEAL
NORTH CAROLINA PROFESSIONAL SEAL 028094 ENGINEER DEBESH C. SARKAR

DocuSigned by: Debesh C. Sarkar 44EBE3E147E4C4... 8/26/2014
DATE

SIG. INVENTORY NO.

26-AUG-2014 08:50
S:\TSGSUM\TS Signals\Signal Design Section\Eastern Region\M Sheets\2012_M4_Fab Details Mastarms.dgn
jgallaway