PROJECT REFERENCE NO.	SHEET NO.
W-5107	Sig. 4.1

EDI MODEL 2018ECL-NC CONFLICT MONITOR PROGRAMMING DETAIL

(remove jumpers and set switches as shown)

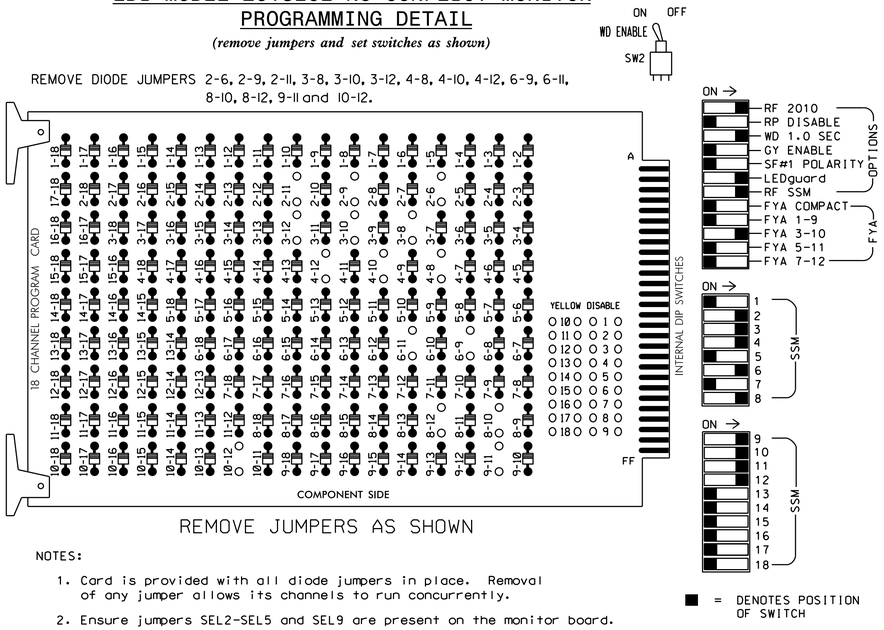

REMOVE JUMPERS AS SHOWN

NOTES:

1. Card is provided with all diode jumpers in place. Removal of any jumper allows its channels to run concurrently.
2. Ensure jumpers SEL2-SEL5 and SEL9 are present on the monitor board.
3. Ensure that Red Enable is active at all times during normal operation.
4. Connect serial cable from conflict monitor to comm. port 1 of 2070 controller. Ensure conflict monitor communicates with 2070.

NOTES

1. To prevent "flash-conflict" problems, insert red flash program blocks for all unused vehicle load switches in the output file. The installer shall verify that signal heads flash in accordance with the Signal Plans.
2. Program phase 8 for Dual Entry.
3. Enable Simultaneous Gap-Out for all phases.
4. Program phases 2 and 6 for Variable Initial and Gap Reduction.
5. Program phases 2 and 6 for Start Up In Green.
6. Program phases 2 and 6 for Yellow Flash and overlaps 1 and 2 as Wag Overlaps.

EQUIPMENT INFORMATION

CONTROLLER.....2070L
CABINET.....332 /W/ AUX
SOFTWARE.....ECONOLITE OASIS
CABINET MOUNT.....BASE
OUTPUT FILE POSITIONS...18 WITH AUX. OUTPUT FILE
LOAD SWITCHES USED.....S2,S4,S5,S8,S11,AUX S1, AUX S2,AUX S4,AUX S5.
PHASES USED.....2,3,4,6,8.
OVERLAP "A".....2
OVERLAP "B".....3+4
OVERLAP "C".....6
OVERLAP "D".....8

SIGNAL HEAD HOOK-UP CHART

LOAD SWITCH NO.	S1	S2	S3	S4		S5	S6	S7	S8	S9	S10	S11	S12	AUX S1	AUX S2	AUX S3	AUX S4	AUX S5	AUX S6
CMU CHANNEL NO.	1	2	13	3		4	14	5	6	15	7	8	16	9	10	17	11	12	18
PHASE	1	2	2 PED	3		4	4 PED	5	6	6 PED	7	8	8 PED	OLA	OLB	SPARE	OLC	OLD	SPARE
SIGNAL HEAD NO.	NU	22,23	NU	23	31,32★	42,43	NU	NU	62,63	NU	NU	81,82	NU	61★	31,32★	NU	21★	41★	NU
RED		128			*	101			134			107							
YELLOW		129				102			135			108							
GREEN		130				103			136			109							
RED ARROW														A121	A124		A114	A101	
YELLOW ARROW				117										A122	A125		A115	A102	
FLASHING YELLOW ARROW														A123	A126		A116	A103	
GREEN ARROW				118	118														

NU = Not Used

* Denotes install load resistor. See load resistor installation detail this sheet.

★ See pictorial of head wiring in detail below.

4 SECTION FYA PPLT SIGNAL WIRING DETAIL

(wire signal heads as shown)

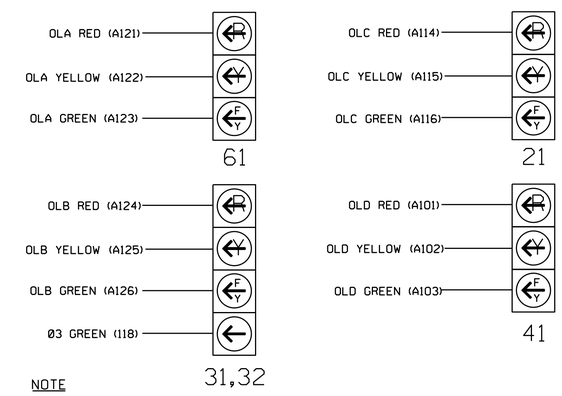

NOTE

1. The sequence display for these signals require special logic programming. See sheet 2 for programming instructions.

INPUT FILE POSITION LAYOUT

(front view)

		1	2	3	4	5	6	7	8	9	10	11	12	13	14
FILE "I"	U	SLOT	Ø2	SLOT	SLOT	Ø3	SLOT	Ø4	Ø4	SLOT	SLOT	SLOT	SLOT	SLOT	FS
			2A			3A		4A	4C						DC ISOLATOR
	L	EMPTY	Ø2	EMPTY	EMPTY	Ø3	EMPTY	Ø4	NOT USED	EMPTY	EMPTY	EMPTY	EMPTY	EMPTY	ST
			2B			3B		4B							DC ISOLATOR
FILE "J"	U	SLOT	Ø6	SLOT	SLOT	SLOT	Ø8	SLOT	WIRED ⊗ INPUT	SLOT	SLOT	SLOT	SLOT	SLOT	SLOT
			6A				8A								
	L	EMPTY	Ø6	EMPTY	EMPTY	EMPTY	Ø8	EMPTY		EMPTY	EMPTY	EMPTY	EMPTY	EMPTY	EMPTY
			6B				8B								

EX.: 1A, 2A, ETC. = LOOP NO.'S

FS = FLASH SENSE
ST = STOP TIME

⊗ Wired Input - Do not populate slot with detector card

INPUT FILE CONNECTION & PROGRAMMING CHART

LOOP NO.	LOOP TERMINAL	INPUT FILE POS.	PIN NO.	INPUT ASSIGNMENT NO.	DETECTOR NO.	NEMA PHASE	CALL	EXTEND	FULL TIME DELAY	STRETCH TIME	DELAY TIME
2A	TB2-5,6	I2U	39	1	2	2	Y	Y			
2B	TB2-7,8	I2L	43	5	12	2	Y	Y	Y		3
3A[1]	TB4-5,6	I5U	58	20	3	3	Y	Y			15
	-	J8U	50	12	28	8	Y	Y			
	-	I5U	58	20★	53	3	Y	Y			
3B[1]	TB4-7,8	I5L	58	20	3	3	Y	Y			15
	-	J8U	50	12	28	8	Y	Y			
	-	I5L	58	20★	53	3	Y	Y			
4A	TB6-1,2	I7U	65	27	34	4	Y	Y			
4B	TB6-3,4	I7L	78	40	44	4	Y	Y			
4C	TB6-5,6	I8U	49	11	24	4	Y	Y			15
6A	TB3-5,6	J2U	40	2	6	6	Y	Y			
6B	TB3-7,8	J2L	44	6	16	6	Y	Y	Y		3
8A	TB5-9,10	J6U	42	4	8	8	Y	Y			
8B	TB5-11,12	J6L	46	8	18	8	Y	Y			15

[1]Add jumper from I5-W to J8-W, on rear of input file.

★ See sheets 2, 3 and 4 for Alternate Phasing Operation.

INPUT FILE POSITION LEGEND: J2L
FILE J
SLOT 2
LOWER

LOAD RESISTOR INSTALLATION DETAIL

(install resistors as shown below)

ACCEPTABLE VALUES

VALUE (ohms)	WATTAGE
1.5K - 1.9K	25W (min)
2.0K - 3.0K	10W (min)

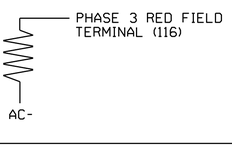

THIS ELECTRICAL DETAIL IS FOR
THE SIGNAL DESIGN: 04-1374
DESIGNED: August 2014
SEALED: 10-27-14
REVISED: N/A

ELECTRICAL DETAIL SHEET 1 OF 4

ELECTRICAL AND PROGRAMMING DETAILS FOR:

SR 2308 (Peedin Road Extension)
at
US 70 WB Ramps/
SR 2307 (Gor-an Farm Road)

Division 4 Johnson County DS Pine Level

PLAN DATE: October 2014 REVIEWED BY: JTR
PREPARED BY: James Peterson REVIEWED BY:

REVISIONS	INIT.	DATE

Prepared in the Offices of:
Transportation Mobility and Safety Division
Signals Management Section
750 N.Greenfield Pkwy,Garner,NC 27529

SEAL
NORTH CAROLINA PROFESSIONAL SEAL 008453 ENGINEER JOHN T. ROWE, JR.

DocuSigned by: John T. Rowe, Jr. 10/29/2014
641D60C145EE4F5...
DATE

SIG. INVENTORY NO. 04-1374

28-OCT-2014 11:11
S:\TSSGU\ITS Signals\Workgroups\Sig Mgt\Peterson\041374_sm_ele_xxx.dgn
jtpeterson