DocuSign Envelope ID: FC61B8C7-3B3D-4C36-9AE3-112CEBEC2D45

TIP NO.	SHEET NO.
W-5107	SIGN-3A

APPROVED: DocuSigned by: Zhaolong Teng ECE10C7968CC46F...

DATE: 11/24/2014

SEAL

NORTH CAROLINA PROFESSIONAL SEAL 032179 ENGINEER ZHAOLONG TENG

WSP
Transportation & Infrastructure
15401 Weston Parkway, Suite 100 • Cary, NC 27513
Tel: 919.678.0035 Fax: 919.678.0206
NC License No. F-0891

STATE OF NORTH CAROLINA
DEPT. OF TRANSPORTATION
DIVISION OF HIGHWAYS
RALEIGH, N.C.

1-12

ENGLISH STANDARD DRAWING FOR

GROUND MOUNTED SIGN SUPPORTS

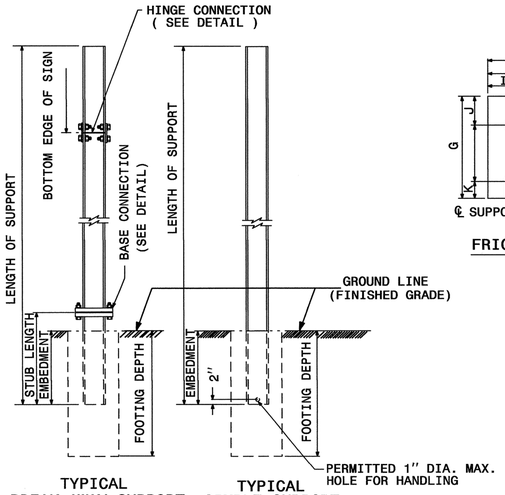

TYPICAL BREAK-AWAY SUPPORT

TYPICAL SIMPLE SUPPORT

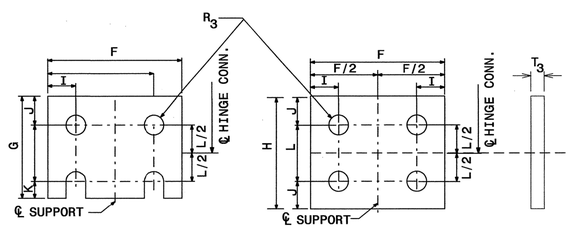

FRICTION ℄ DETAIL

HINGE ℄ DETAIL

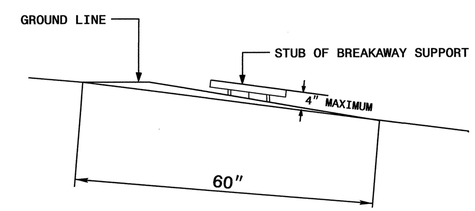

STUB HEIGHT REQUIREMENTS

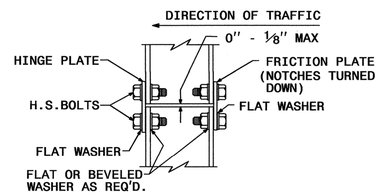

HINGE CONNECTION

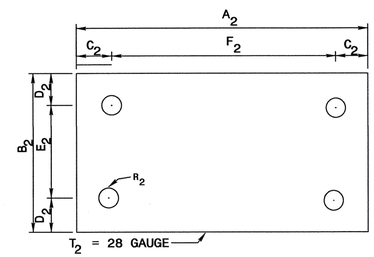

KEEPER PLATE

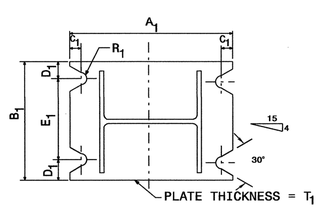

SLIP BASE PLATE

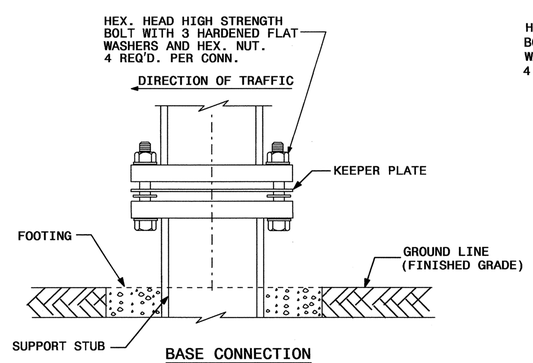

BASE CONNECTION

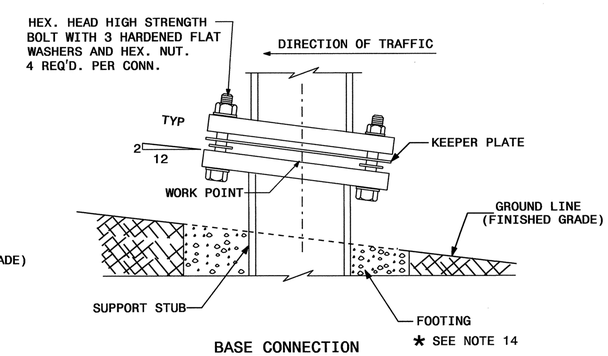

BASE CONNECTION

SEE SHEET 2 OF 3 FOR
BASE CONNECTION DATA
HINGE CONNECTION DATA
& FOUNDATION DATA.
SEE SHEET 3 OF 3 FOR
GENERAL NOTES.

SHEET 1 OF 3

903D10

STATE OF NORTH CAROLINA
DEPT. OF TRANSPORTATION
DIVISION OF HIGHWAYS
RALEIGH, N.C.

1-12

ENGLISH STANDARD DRAWING FOR

GROUND MOUNTED SIGN SUPPORTS

SHEET 1 OF 3

903D10

REVISED SIGNING
ROADWAY STANDARD DRAWING

11/3/2014
R:\W5107\Traffic\Signing\CADD\Signing Layout Plans\W5107_Sgn_SGN_psh_I-4B.dgn
uszt04226