PROJECT REFERENCE NO.	SHEET NO.
W-5107	RF-2
R/W SHEET NO.	
ROADWAY DESIGN ENGINEER	HYDRAULICS ENGINEER

PLANTING DETAILS

LIVE STAKES PLANTING DETAIL

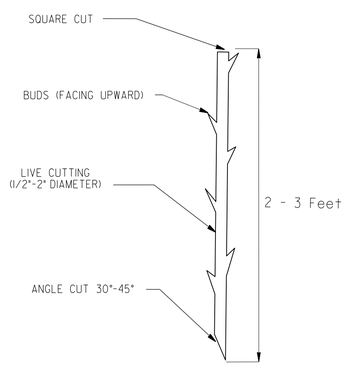

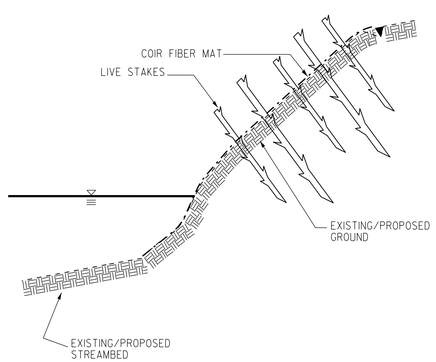

BANK STABILIZATION WITH LIVE STAKES

NOTE:
LIVE STAKES SHALL BE SPACED APPROXIMATELY 4 FEET ON CENTER
LIVE STAKES SHALL BE DRIVEN UNTIL APPROXIMATELY ¾ OF LIVE STAKE IS WITHIN GROUND

BAREROOT PLANTING DETAIL DIBBLE PLANTING METHOD USING THE KBC PLANTING BAR

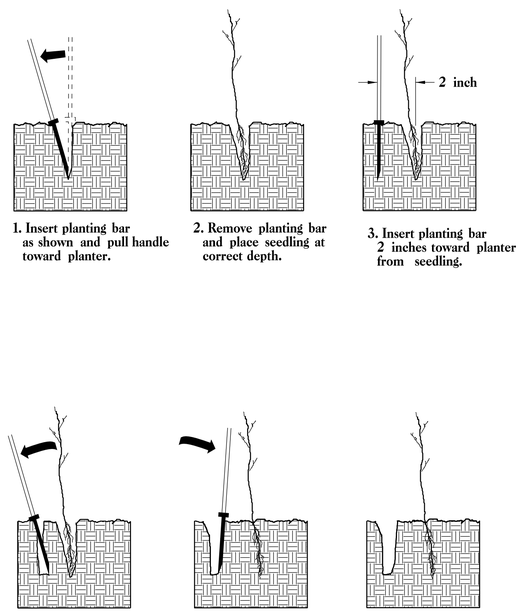

1. Insert planting bar as shown and pull handle toward planter.
2. Remove planting bar and place seedling at correct depth.
3. Insert planting bar 2 inches toward planter from seedling.
4. Pull handle of bar toward planter, firming soil at bottom.
5. Push handle forward firming soil at top.
6. Leave compaction hole open. Water thoroughly.

PLANTING NOTES:

PLANTING BAG
During planting, seedlings shall be kept in a moist canvas bag or similar container to prevent the root systems from drying.

KBC PLANTING BAR
Planting bar shall have a blade with a triangular cross section, and shall be 12 inches long, 4 inches wide and 1 inch thick at center.

ROOT PRUNING
All seedlings shall be root pruned, if necessary, so that no roots extend more than 10 inches below the root collar.

- ☐ TYPE 1 STREAMBANK REFORESTATION SHALL BE PLANTED 3 FT. TO 5 FT. ON CENTER, RANDOM SPACING, AVERAGING 4 FT. ON CENTER, APPROXIMATELY 2724 PLANTS PER ACRE.
- ☐ TYPE 2 STREAMBANK REFORESTATION SHALL BE PLANTED 6 FT. TO 10 FT. ON CENTER, RANDOM SPACING, AVERAGING 8 FT. ON CENTER, APPROXIMATELY 680 PLANTS PER ACRE.
- ☐ NOTE: TYPE 1 AND TYPE 2 STREAMBANK REFORESTATION SHALL BE PAID FOR AS "STREAMBANK REFORESTATION"

STREAMBANK REFORESTATION TYPICAL

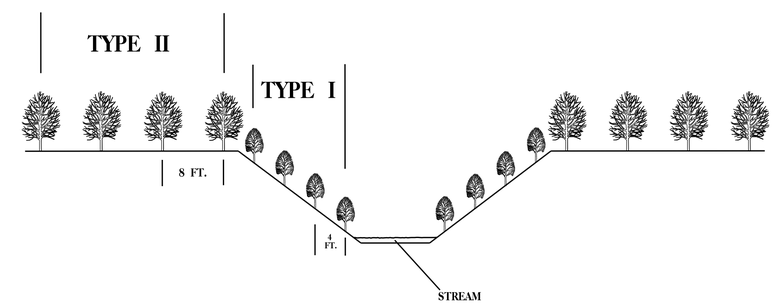

STREAMBANK REFORESTATION

MIXTURE, TYPE, SIZE, AND FURNISH SHALL CONFORM TO THE FOLLOWING:

TYPE 1		
50% SALIX NIGRA	BLACK WILLOW	2 ft – 3 ft LIVE STAKES
50% CORNUS AMOMUM	SILKY DOGWOOD	2 ft – 3 ft LIVE STAKES
TYPE 2		
25% QUERCUS PHELLOS	WILLOW OAK	12 in – 18 in BR
25% PLATANUS OCCIDENTALIS	SYCAMORE	12 in – 18 in BR
25% FRAXINUS PENNSYLVANICA	GREEN ASH	12 in – 18 in BR
25% BETULA NIGRA	RIVER BIRCH	12 in – 18 in BR

- ☐ SEE PLAN SHEETS FOR AREAS TO BE PLANTED

STREAMBANK REFORESTATION DETAIL SHEET 1 OF 2

N.C.D.O.T. - ROADSIDE ENVIRONMENTAL UNIT