PROJECT REFERENCE NO.	SHEET NO.
W-5107	RF-3
R/W SHEET NO.	
ROADWAY DESIGN ENGINEER	HYDRAULICS ENGINEER

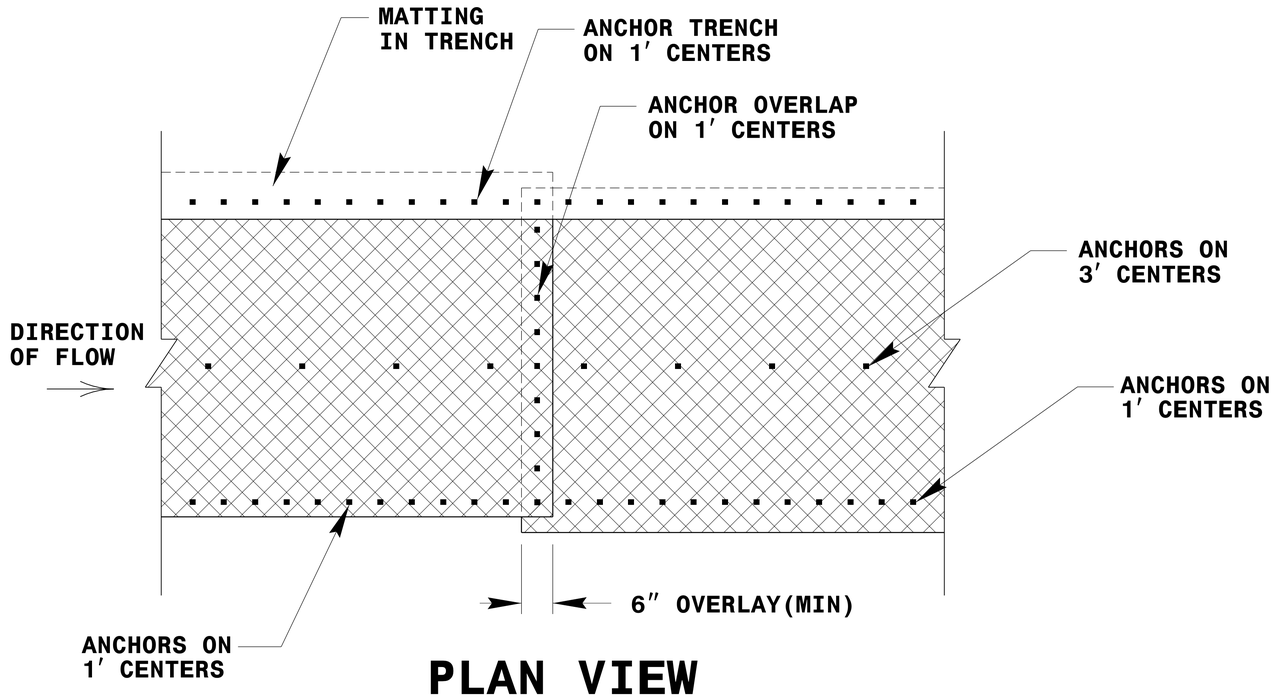

PLAN VIEW

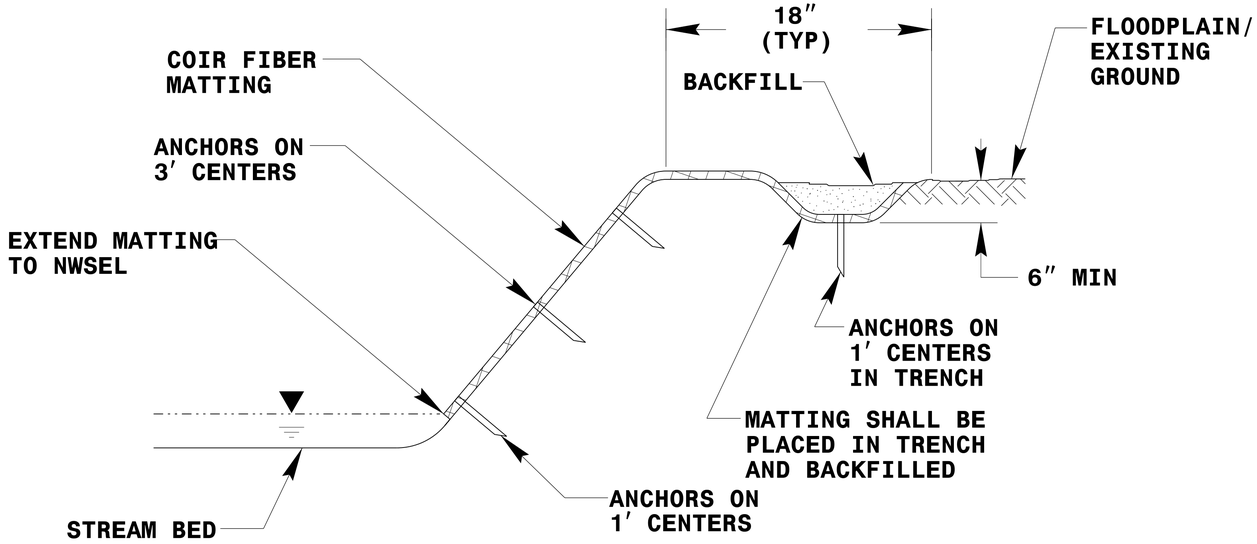

TYPICAL CROSS SECTION

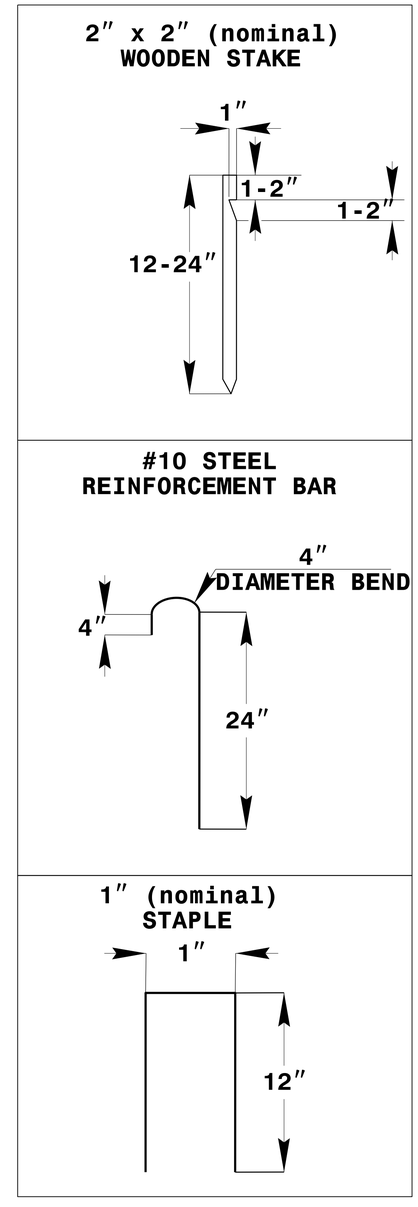

ANCHOR OPTIONS

COIR FIBER MATTING DETAIL

NOT TO SCALE

STREAMBANK REFORESTATION

DETAIL SHEET 2 OF 2

N.C.D.O.T. - ROADSIDE ENVIRONMENTAL UNIT