DocuSign Envelope ID: B471AF96-D299-4B6F-8D20-3200F458DB39

DocuSigned by:
Zhaolong Teng
977BEB6090334A8...

TIP NO.	SHEET NO.
W-5107	PMP-4A

APPROVED: Zhaolong Teng (DocuSigned by: 977BEB6090334A8...)

DATE: 1/9/2015

SEAL

NORTH CAROLINA PROFESSIONAL SEAL 032179 ENGINEER ZHAOLONG TENG

WSP
Transportation & Infrastructure
15401 Weston Parkway, Suite 100 • Cary, NC 27513
Tel: 919.678.0035 Fax: 919.678.0206
NC License No. F-0891

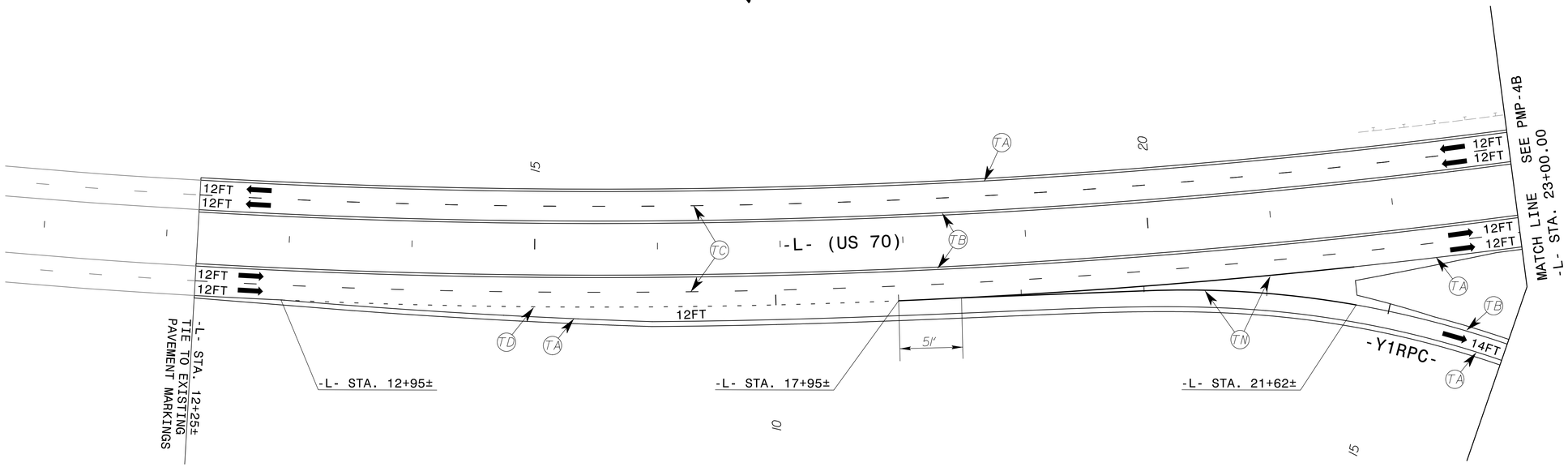

PAVEMENT MARKING PLAN

10/24/2014
R:\W5107\Traffic\Signing\CADD\Signing Layout Plans\W5107_Sgn_PMP_phs_4A.dgn
usha:04407