DocuSign Envelope ID: A6071816-126B-412F-8014-91738C54B096

PROJECT REFERENCE NO.	SHEET NO.
W-5107	2C-2

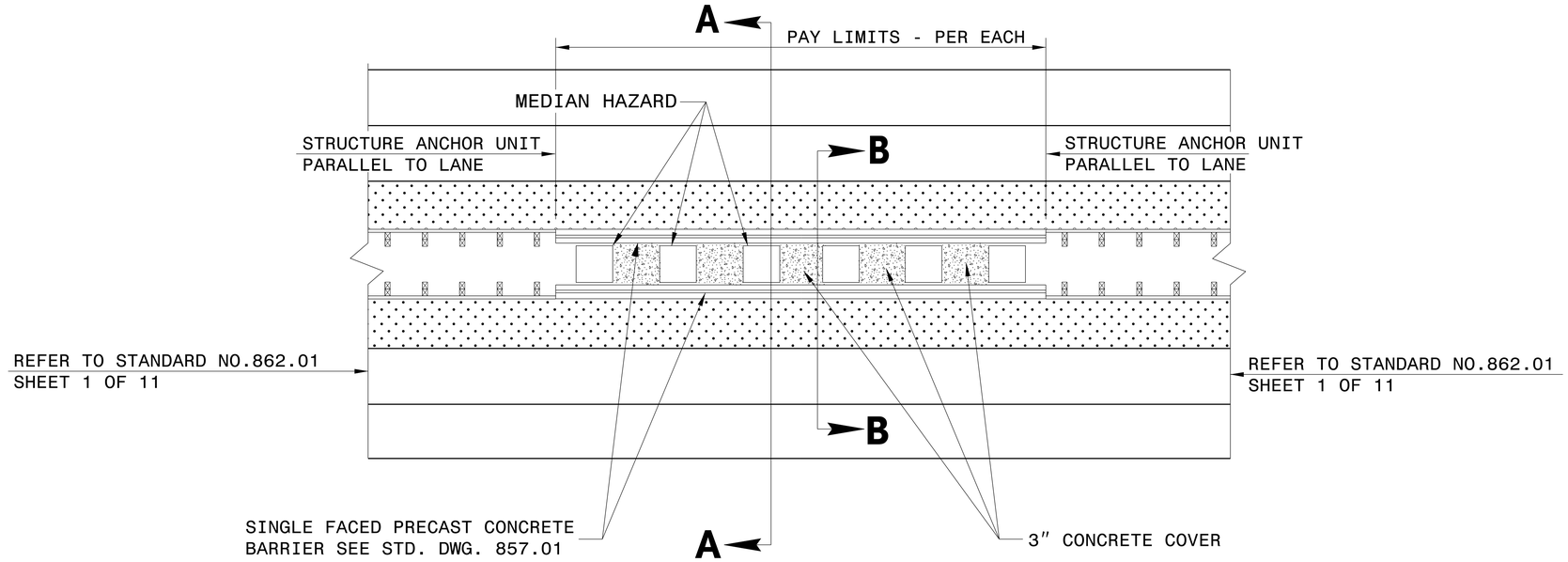

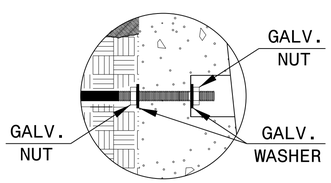

INSET 'A'

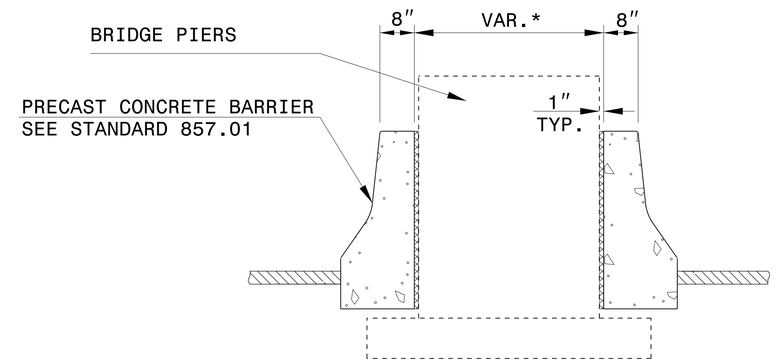

SECTION A-A

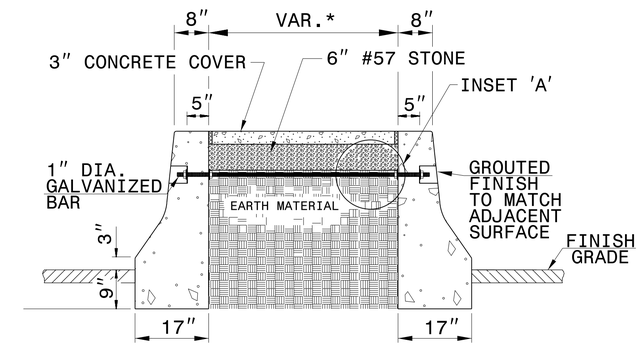

SECTION B-B

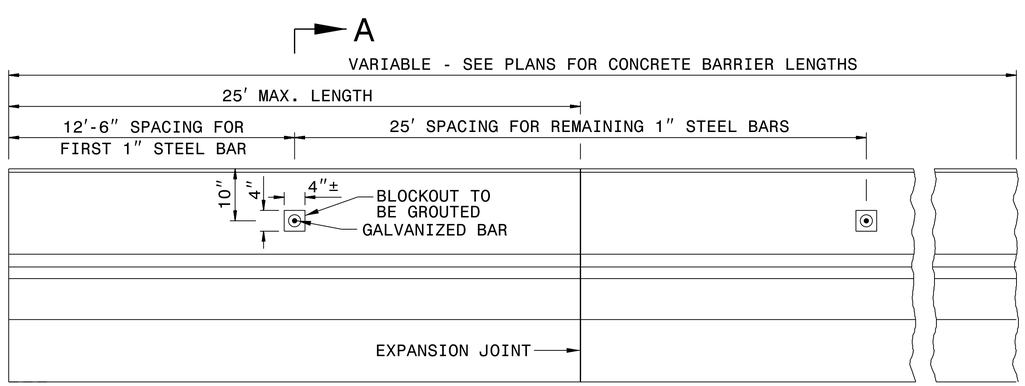

ELEVATION

GENERAL NOTES:

*THIS DIMENSION MAY VARY DEPENDING ON THE WIDTH OF THE PIER.

INSET FIRST 1" DIA. GALVANIZED BAR 12'-6" AND SPACE THE REMAINING 1" BARS AT 25'-0".

USE AN APPROVED BONDING SYSTEM IN ACCORDANCE WITH SECTION 1081-1, TYPE 3A OF THE STANDARD SPECIFICATIONS.

USE CLASS B CONCRETE FOR THE CONCRETE COVER

SEAL ALL EXPANSION JOINTS WITH JOINT FILLER (SEE SECTION 1028 OF THE SPECIFICATIONS).

PLACE A 1" BAR BETWEEN EACH SET OF PIERS

NORTH CAROLINA PROFESSIONAL SEAL 022966 ENGINEER Joel S. Howerton

DocuSigned by: Joel Howerton
873F3D1TDCDC45F...
12/2/2014

CONTRACT STANDARDS
AND DEVELOPMENT UNIT
Office 919-707-6950 FAX 919-250-4119

DETAIL OF MEDIAN HAZARD PROTECTION

ORIGINAL BY: T.S.Spell DATE: 2-4-10
MODIFIED BY: DATE:
CHECKED BY: DATE:
FILE SPEC.: eward:details/stand/transition barrier_862d01.dgn

$$$$SYSTIME$$$$
$$$$USERNAME$$$$
$$$$SCRNAME$$$$