DocuSign Envelope ID: 9051990E-EE90-4996-9A95-886BE58C17B2

PROJECT REFERENCE NO.	SHEET NO.
W-5107	2A-2

ROADWAY DESIGN ENGINEER
NORTH CAROLINA PROFESSIONAL SEAL 022037 STEPHEN T. SMALLWOOD
DocuSigned by: 12/5/2014
SEAL NOT VALID UNLESS SIGNED AND DATED

PAVEMENT ENGINEER
NORTH CAROLINA PROFESSIONAL SEAL 22896 CLARK S. MORRISON
DocuSigned by: 12/5/2014

ARCADIS
C & M of North Carolina, Inc.
WWW.ARCADIS-US.COM
801 Corporate Center Drive, Suite 300
Raleigh, NC 27607-5073
Tel: 919/854-1282 Fax: 919/854-5448 NC License No. C-1869

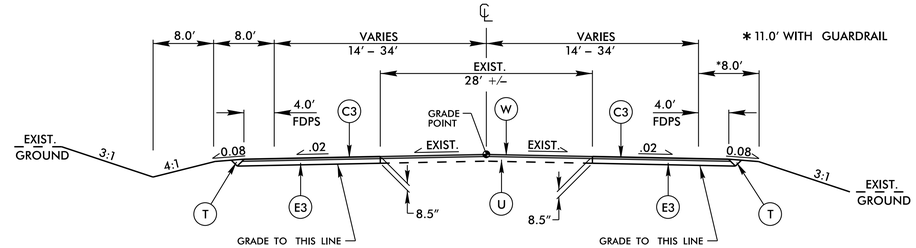

TYPICAL SECTION NO. 4

–Y1– STA. 13+70.00 TO –Y1– STA. 19+50.00
–Y1– STA. 37+00.00 TO –Y1– STA. 42+10.00

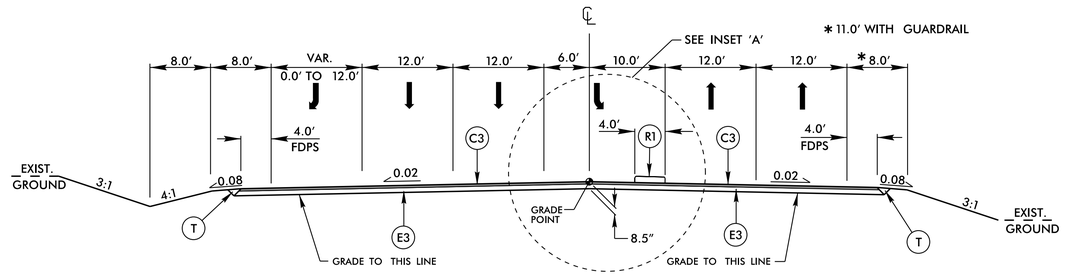

TYPICAL SECTION NO. 4A

–Y1– STA. 19+50.00 TO –Y1– STA. 24+80.00

NOTE: SEE PLANS FOR LOCATION OF TURN LANES, TAPERS AND ISLAND LOCATIONS.

INSET 'A'

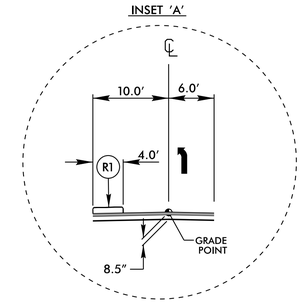

USE INSET 'A' IN CONJUNCTION WITH TYPICAL NO. 4/4A.

–Y1– STA. 31+40.00 TO –Y1– STA. 37+00.00

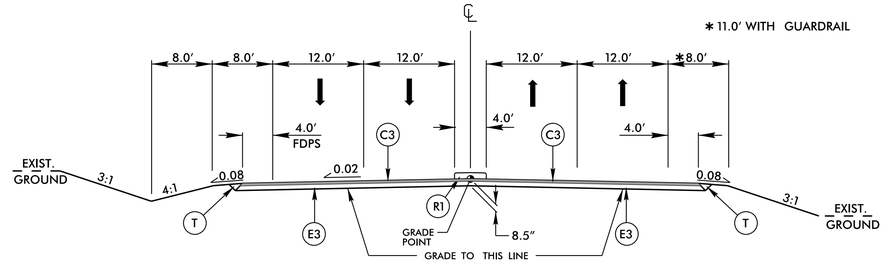

TYPICAL SECTION NO. 5

–Y1– STA. 24+80.00 TO –Y1– STA. 27+71.80 BEGIN BRIDGE
–Y1– STA. 30+69.80 END BRIDGE TO –Y1– STA. 31+40.00

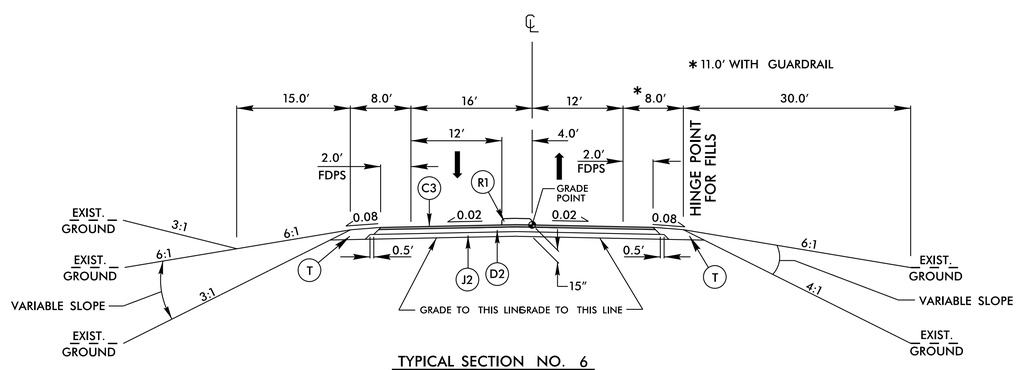

TYPICAL SECTION NO. 6

–Y6LPB– STA. 10+00.00 TO –Y6LPB– STA. 20+03.85
–Y6LPBA– STA. 10+00.00 TO –Y6LPBA– STA. 12+00.98
–Y6LPC– STA. 10+00.00 TO –Y6LPC– STA. 18+10.18
–Y6LPCA– STA. 10+00.00 TO –Y6LPCA– STA. 12+22.66

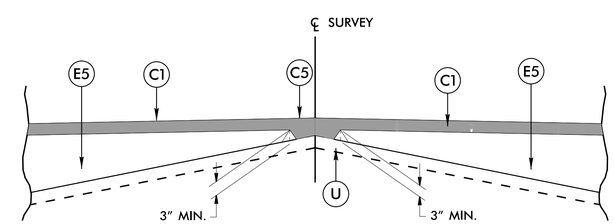

Detail Showing Method of Wedging
Use for Typical # 4, 9, and 10

PAVEMENT SCHEDULE

C1	1.5″ ASPHALT, TYPE S9.5B
C2	1.5″ ASPHALT, TYPE S9.5C
C3	3.0″ ASPHALT, TYPE S9.5B
C4	3.0″ ASPHALT, TYPE S9.5C
C5	VAR. DEPTH ASPHALT, TYPE S9.5B
D1	2.5″ ASPHALT, TYPE I19.0C
D2	4.0″ ASPHALT, TYPE I19.0B
D3	4.0″ ASPHALT, TYPE I19.0C
E1	3.5″ ASPHALT, TYPE B25.0C
E2	4.0″ ASPHALT, TYPE B25.0B
E3	5.5″ ASPHALT, TYPE B25.0B
E4	5.5″ ASPHALT, TYPE B25.0C
E5	VAR. DEPTH ASPHALT, TYPE B25.0B
J1	PROP. 6″ AGGREGATE BASE COURSE
J2	PROP. 8″ AGGREGATE BASE COURSE
L	CLASS IV SUBGRADE STABILIZATION
N1	GEOTEXTILE FOR PAVEMENT STABILIZATION
N2	GEOTEXTILE FOR SOIL STABILIZATION
P1	PRIME COAT 0.35 GAL/SY
P2	PRIME COAT 0.50 GAL/SY
R	2′–6″ CONCRETE CURB AND GUTTER
R1	5″ MONOLITHIC CONCRETE ISLAND
R2	SHOULDER BERM GUTTER
T	EARTH MATERIAL
U	EXISTING PAVEMENT
W	VARIABLE DEPTH ASPHALT PAVEMENT
V	MILLING 1.5″

Note: Pavement Edge Slopes are 1:1 Unless Shown Otherwise

5/14/99
12/2/2014
R:\Roadway\Proj\W-5107_rdy_typ.dgn
ARCADIS C&M of North Carolina, Inc.