DocuSign Envelope ID: A6071816-126B-412F-8014-91738C54B096

5/14/99

PROJECT REFERENCE NO.	SHEET NO.
W-5107	2C-1

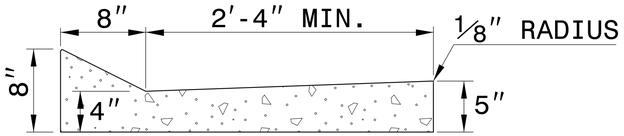

SHOULDER BERM GUTTER

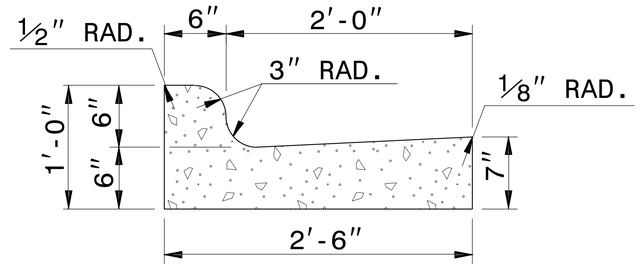

2′-6″ CURB AND GUTTER

*NOTE: SEE STD. DWG. 846.01
FOR GENERAL NOTES

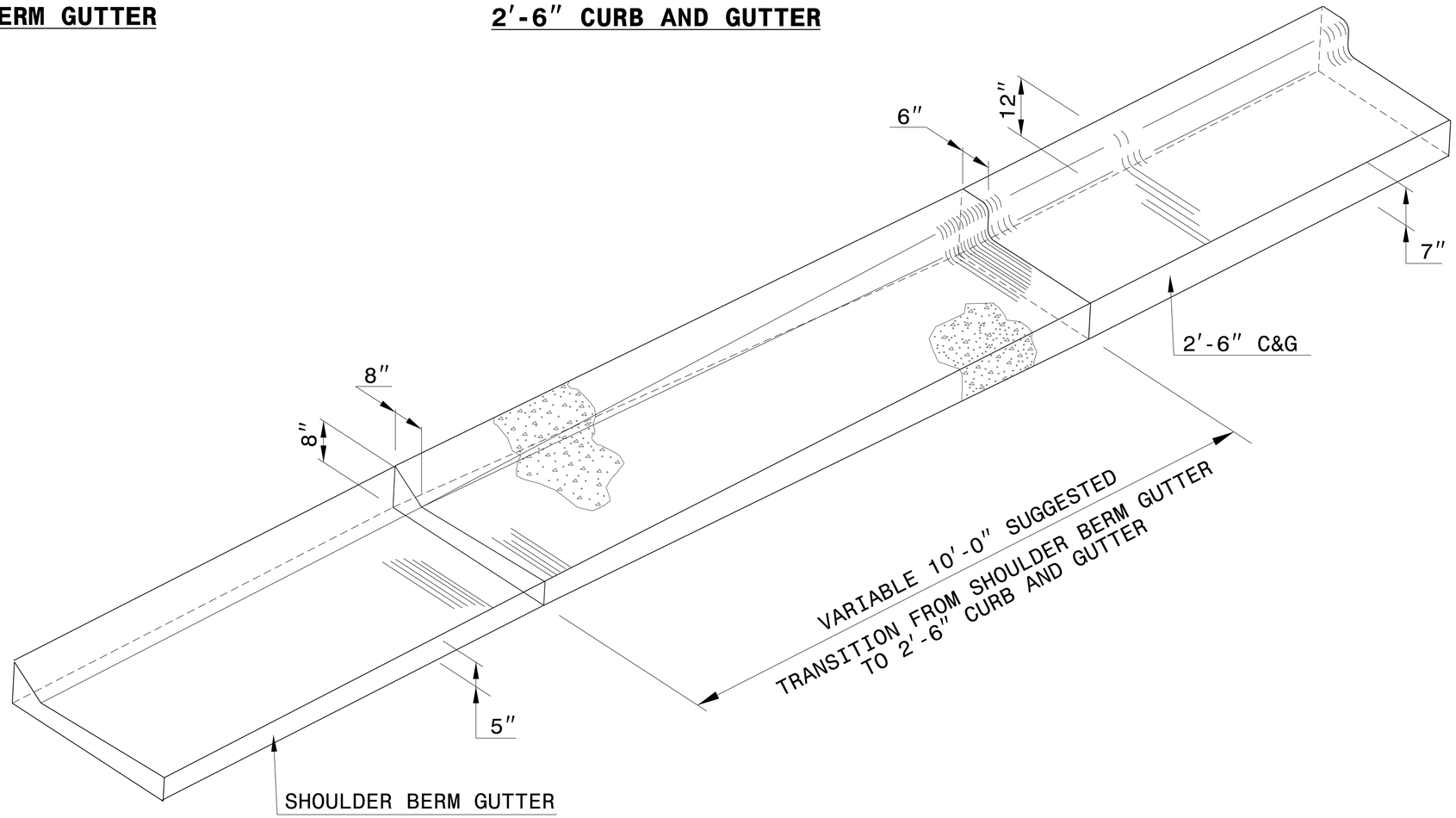

ISOMETRIC VIEW OF TRANSITION

NORTH CAROLINA PROFESSIONAL SEAL 022966 ENGINEER Joel S. Howerton

Joel Howerton
B73F3D17DCDC45F...
12/2/2014

CONTRACT STANDARDS AND DEVELOPMENT UNIT
Office 919-707-6950 FAX 919-250-4119

DETAIL OF SHOULDER BERM GUTTER TO 2′-6″ CURB & GUTTER TRANSITION SECTION

ORIGINAL BY: E.E. WARD DATE: 5-29-02
MODIFIED BY: DATE:
CHECKED BY: DATE:
FILE SPEC.: /usr/details/stand/cgtransit.dgn

$$$$SYSTIME$$$$
$$$$SYSVER$$$$
$$$$CONFIG$$$$
$$$$USERNAME$$$$