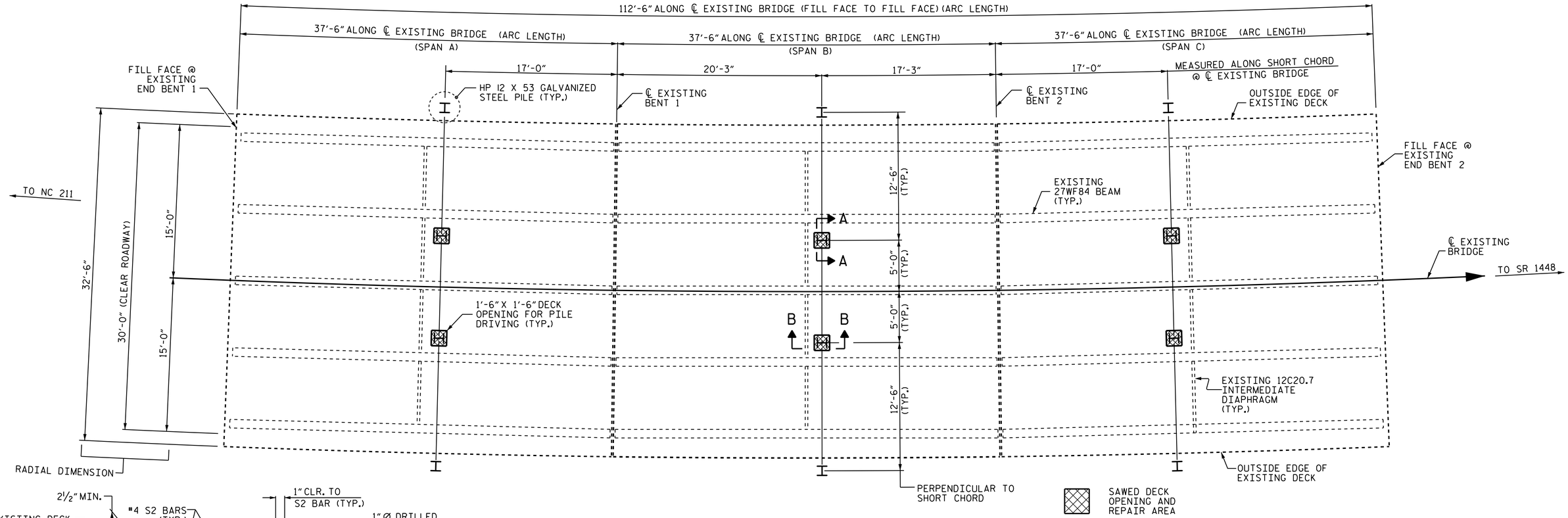

PLAN OF SPANS

PILE DRIVING ORIENTATION AS SHOWN

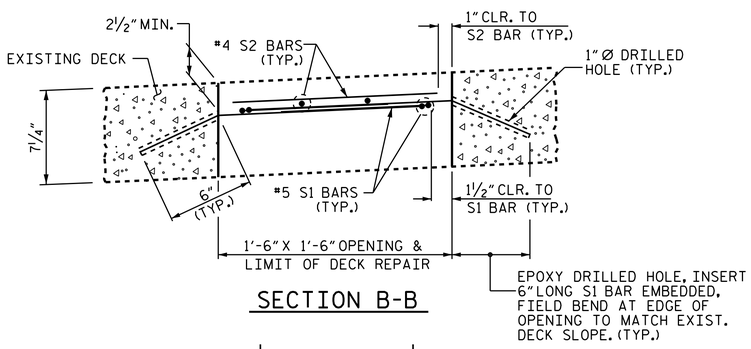

SECTION B-B

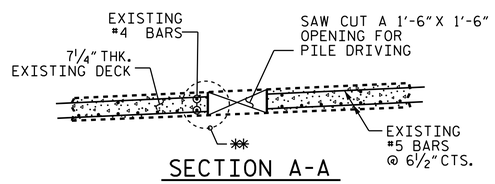

SECTION A-A

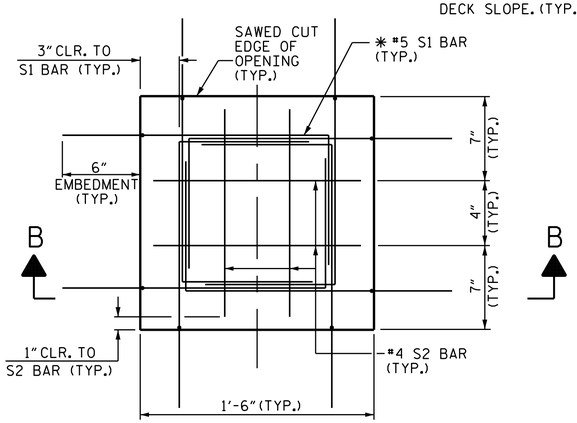

SLAB REPAIR DETAILS

EXISTING REINFORCING NOT SHOWN FOR CLARITY
✱ FIELD BEND S1 BAR TO MATCH EXISTING DECK SLOPE.

BILL OF MATERIAL

BAR	NO.	SIZE	TYPE	LENGTH	WEIGHT
S1	48	#5	1	2'-7"	129
S2	24	#4	STR	1'-4"	21
REINFORCING STEEL				LBS.	150
CONCRETE FOR DECK REPAIR				CU. FT.	8.2

BAR TYPE

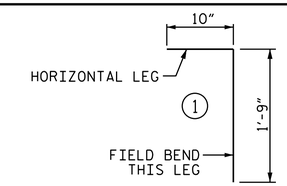

BAR DIMENSIONS ARE OUT TO OUT

NOTES

EXISTING JOINTS AND DECK DRAINS SHALL BE SEALED PRIOR TO BEGINNING SAW CUTS OF BRIDGE DECK.

EXISTING DIMENSIONS AND BRIDGE CONDITION ARE FROM THE BEST INFORMATION AVAILABLE. THE CONTRACTOR SHALL FIELD VERIFY THE INFORMATION SHOWN ON THE PLANS AND NOTIFY THE ENGINEER IF ACTUAL DIMENSIONS AND CONDITIONS DIFFER.

✱✱ AFTER SAW CUTS OF DECK, THE EXPOSED ENDS OF THE EXISTING REINFORCING STEEL AT ALL EDGES OF SAWED OPENINGS SHALL HAVE TWO COATS OF EPOXY PAINT APPLIED TO PREVENT FUTURE POTENTIAL RUST.

FOR "CONCRETE FOR DECK REPAIR", SEE SPECIAL PROVISIONS.

THE COST OF ALL REINFORCING STEEL REQUIRED TO REPAIR THE DECK OPENINGS SHALL BE INCLUDED IN THE PRICE BID FOR "CONCRETE FOR DECK REPAIR".

NORTH CAROLINA PROFESSIONAL SEAL 16301 ENGINEER TING HSIUNG FANG

DocuSigned by: Ting H. Fang
E72088400977435...

12/19/2014

PROJECT NO. B-5127
HOKE COUNTY
BRIDGE NO.: 100

SHEET 2 OF 4

STATE OF NORTH CAROLINA
DEPARTMENT OF TRANSPORTATION
RALEIGH

CONCRETE DECK REPAIRS

REVISIONS						SHEET NO.
NO.	BY:	DATE:	NO.	BY:	DATE:	S-2
1			3			TOTAL SHEETS
2			4			4

DRAWN BY : T. H. FANG DATE : 10/13/14
CHECKED BY : S. WANCE DATE : 11/05/14
DESIGN ENGINEER OF RECORD: T. H. FANG DATE : 11/07/14

19-DEC-2014 12:23
K:\TIPProjects-B\B5127\Structures\Plans\FinalPlans\b5127_sd_*100_cbt.dgn
ttfang