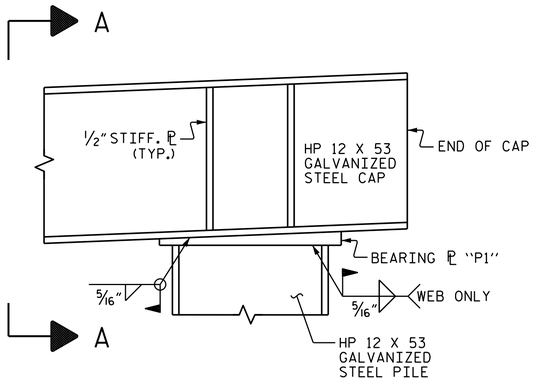

DETAIL A

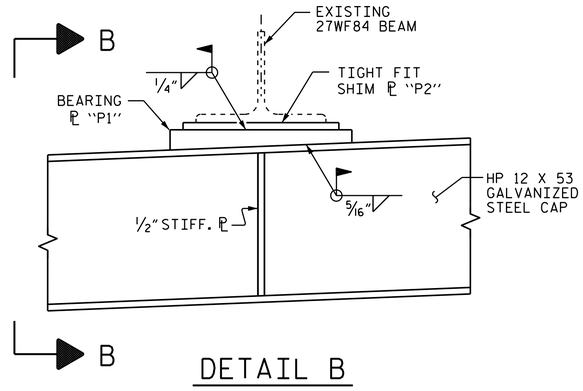

DETAIL B

NOTES

ALL STEEL SHALL BE AASHTO M270, GRADE 36 OR BETTER.

ALL DIMENSIONS SHOWN ARE HORIZONTAL OR VERTICAL, UNLESS OTHERWISE NOTED.

ALL HP 12x53 GALVANIZED STEEL PILES ARE VERTICAL.

END OF HP 12x53 GALVANIZED STEEL CAP SHALL BE PLUMB.

THE CONTRACTOR SHALL VERIFY THE EXISTING BRIDGE CROSS SLOPE AND RECALCULATE THE BEARING ℙ P1 BEVEL SLOPE AS NECESSARY.

THE BEARING PLATES SHALL BE CENTERED ABOUT THE EXISTING BEAM FLANGES AND ABOUT THE FLANGE OF THE HP 12x53 GALVANIZED STEEL CAP.

BEARING STIFFENERS ARE TO BE PLACED NORMAL TO THE WEB OF THE BEAM AND PILE AND SHALL BE PLUMB.

ALL WELDS WILL BE INSPECTED AND TESTED BY THE NCDOT MATERIALS AND TEST UNIT AND SHALL CONFORM TO THE REQUIREMENTS OF AWS D1.5 BRIDGE WELDING CODE AND THE STANDARD SPECIFICATION. SEE "REMOVAL OF POSTING FOR EXISTING BRIDGE #100" SPECIAL PROVISION FOR ADDITIONAL REQUIREMENTS.

AFTER CRUTCH BENT INSTALLATION COMPLETE, ANY CONCRETE REMOVED FROM THE DECK OPENINGS SHALL BE REPLACED AS SPECIFIED IN THE SPECIAL PROVISION "CONCRETE FOR DECK REPAIR".

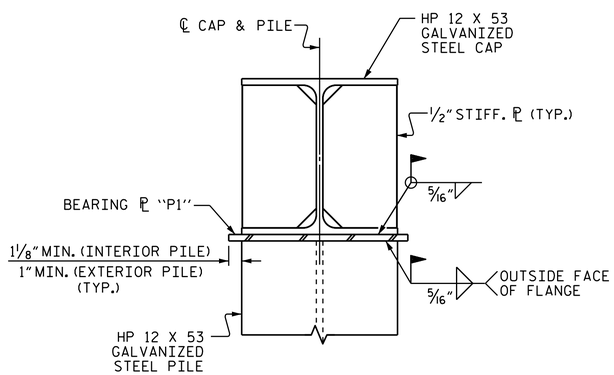

VIEW A-A

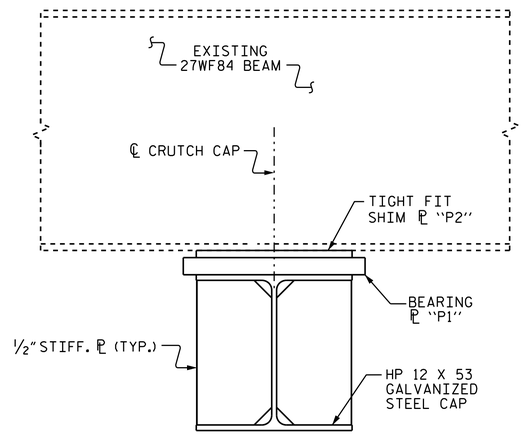

VIEW B-B

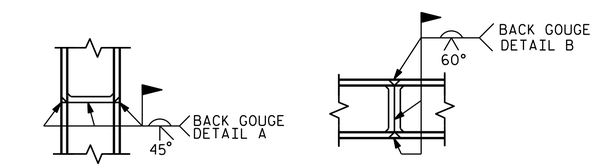

△ PILE VERTICAL

△ POSITION OF PILE DURING WELDING.

△ PILE HORIZONTAL OR VERTICAL

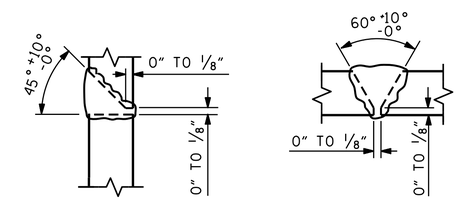

DETAIL A

DETAIL B

PILE SPLICE DETAILS

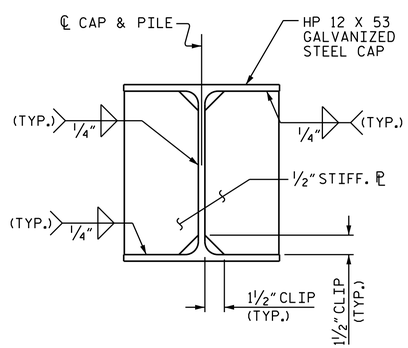

STIFFENER DETAIL

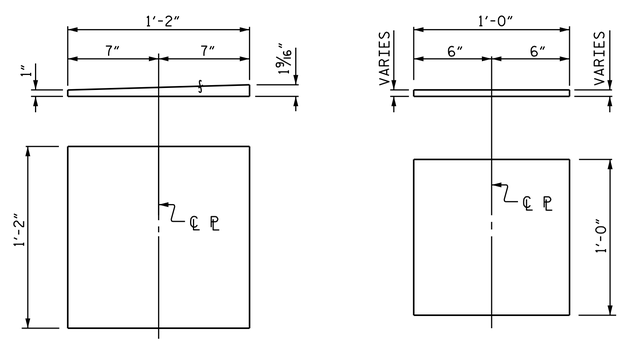

P1
BEARING ℙ
(27 REQ'D)

P2
SHIM ℙ

STEEL PLATE DETAILS

PROJECT NO. B-5127

HOKE COUNTY

BRIDGE NO. 100

SHEET 4 OF 4

STATE OF NORTH CAROLINA
DEPARTMENT OF TRANSPORTATION
RALEIGH

STEEL CRUTCH BENT DETAILS

NORTH CAROLINA PROFESSIONAL SEAL 16301 ENGINEER TING HSIUNG FANG

DocuSigned by: Ting H. Fang
E72088400977435...
12/19/2014

REVISIONS						SHEET NO.
NO.	BY:	DATE:	NO.	BY:	DATE:	S-4
1			3			TOTAL SHEETS
2			4			4

DRAWN BY : TING H. FANG DATE : 10/24/14
CHECKED BY : S. WANCE DATE : 11/05/14
DESIGN ENGINEER OF RECORD: TING H. FANG DATE : 11/07/14

19-DEC-2014 12:23
K:\TIPProjects-B\B5127\Structures\Plans\FinalPlans\b5127_sd_#100_cbt.dgn
ttfang