PROJECT REFERENCE NO.	SHEET NO.
B-5150	2D-2
R/W SHEET NO.	
ROADWAY DESIGN ENGINEER	HYDRAULICS ENGINEER

NORTH CAROLINA PROFESSIONAL SEAL 022007 ENGINEER Andrew Jason Moore
DocuSigned: Andrew Jason Moore 12/16/2014
4D6EE1A4EEF8AE7

NORTH CAROLINA PROFESSIONAL SEAL 039122 ENGINEER Gregory W. Brickham
DocuSigned: Gregory W. Brickham 12/16/2014
BC9BDC07E34EFD

DETAIL H

CHANNEL IMPROVEMENTS

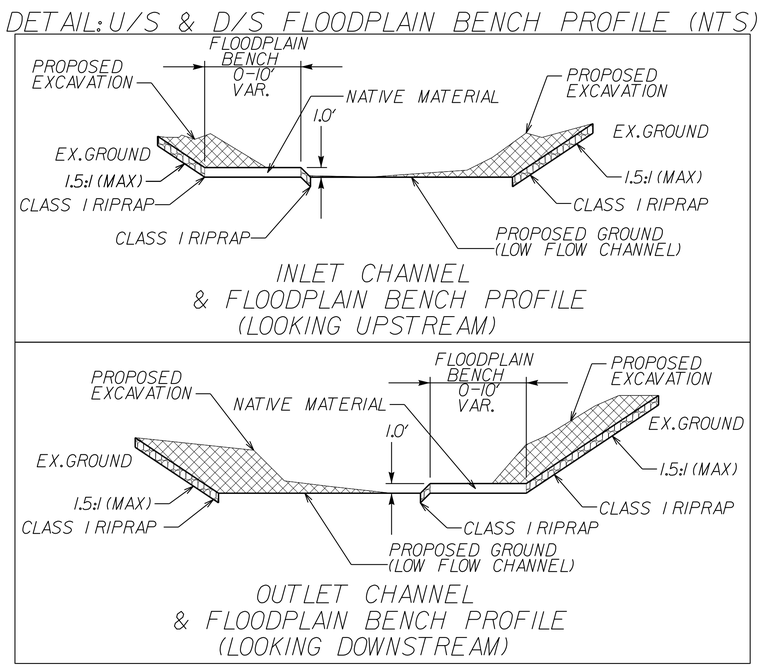

DETAIL I

PSRM AT OUTLET OF TEMPORARY DETOUR PIPES

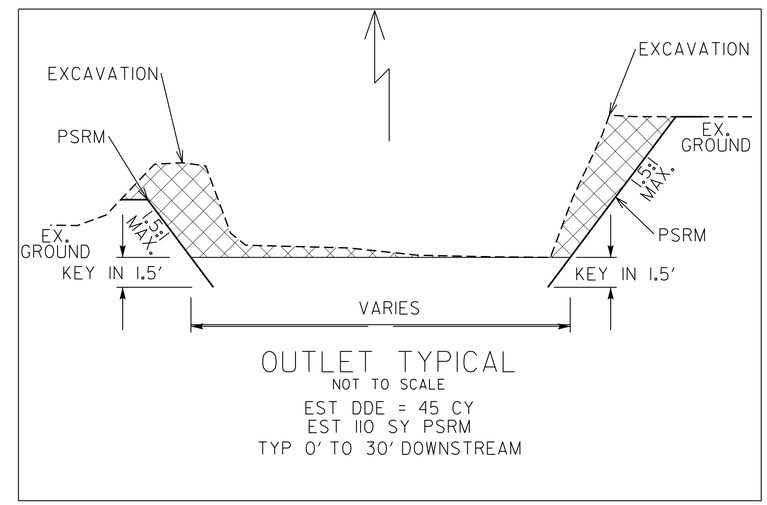

REVISIONS

8/17/99

16-DEC-2014 09:35
B-5150_RDY_DITCH DETAILS.dgn
$$$$USERNAME$$$$