PROJECT REFERENCE NO.	SHEET NO.
B-5150	2A-2

ROADWAY DESIGN ENGINEER
NORTH CAROLINA PROFESSIONAL SEAL 022007 ENGINEER Andrew Jason Moore
DocuSigned by: Jason Moore 11/26/2014
4096E144EFE9AE7...

PAVEMENT DESIGN ENGINEER
NORTH CAROLINA PROFESSIONAL SEAL 022896 ENGINEER CLARK S. MORRISON
DocuSigned by: Clark S. Morrison 11/26/2014
B0A110DD1E004C8...

PAVEMENT SCHEDULE	
C1	3" S9.5B
D1	3" I19.0B
E1	5½" B25.0B
J1	8" ABC
P	.35 PRIME COAT
R	CONC. CURB & GUTTER
T	EARTH MATERIAL
U	EXISTING PVMT.

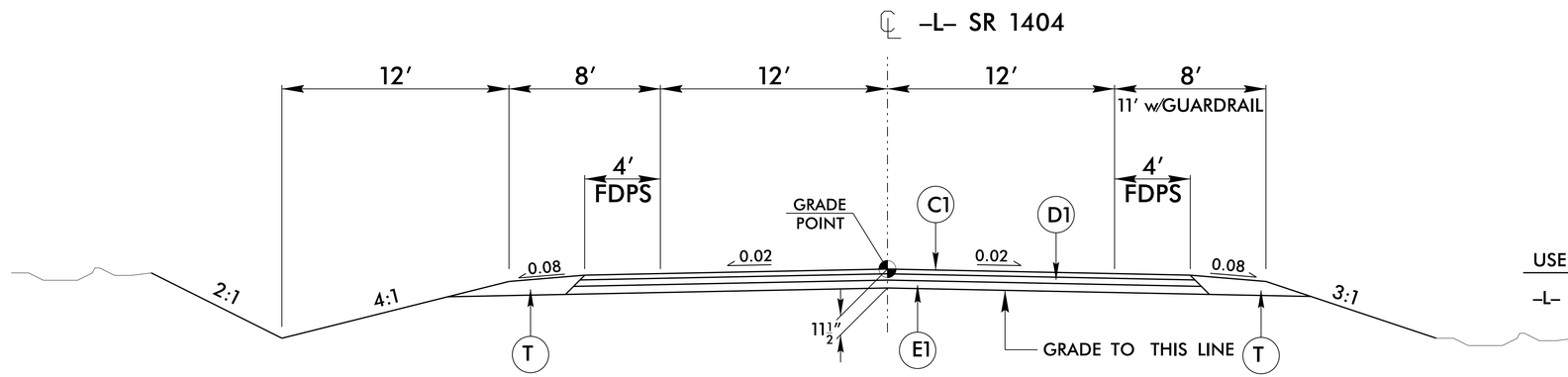

TYPICAL SECTION NO. 2

USE TYPICAL SECTION NO. 2

–L– STA 13+70.00 TO 15+70.00

TRANSITION FROM T.S. No. 2 TO EXISTING
–L– STA. 15+70.00 TO 16+70.00

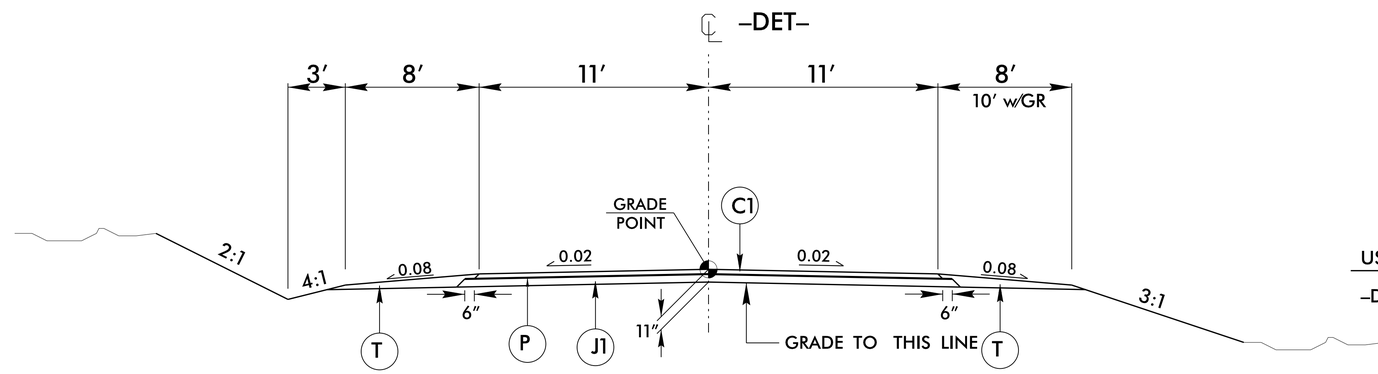

TYPICAL SECTION NO. 3

USE TYPICAL SECTION NO. 3

–DET– STA 12+50.53 TO 17+31.13

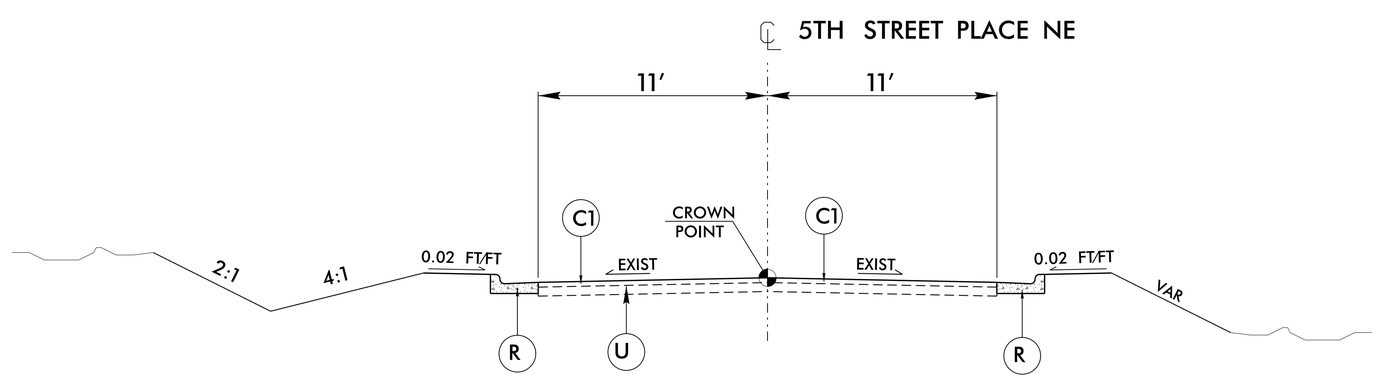

TYPICAL SECTION NO. 4

USE TYPICAL SECTION NO. 4

ON 5TH ST PLACE NE LEFT OF
–L– STA 12+33.75 TO 13+12.69
REPLACE 2′–6″ CURB AND GUTTER
TIE TO EXISTING

6/2/99

21-NOV-2014 10:41
R:\Roadway\Proj\B5150_Rdy_typ.dgn
$$$$USERNAME$$$$