PROJ. REFERENCE NO.	SHEET NO.
R-2915D	TMP-29

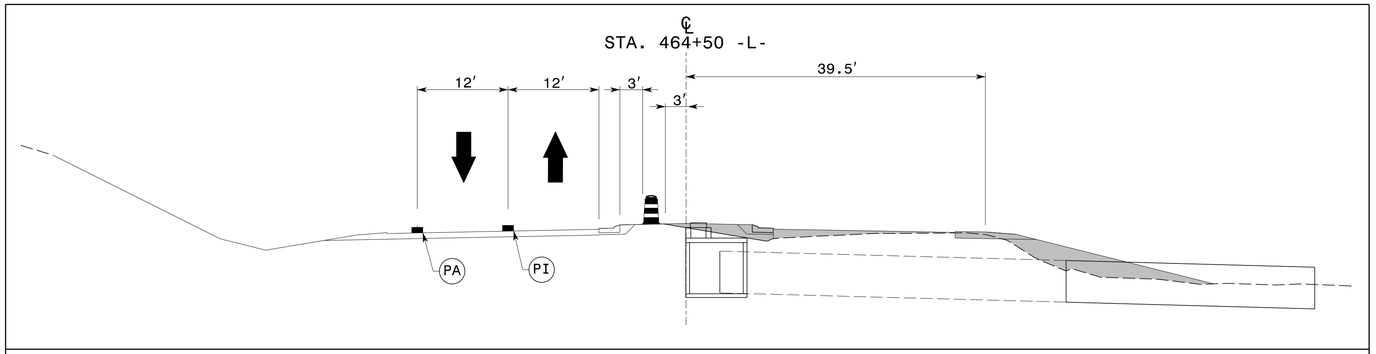

SECTION B2-B2

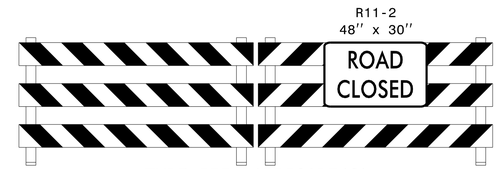

TYPE III BARRICADE(S)

1

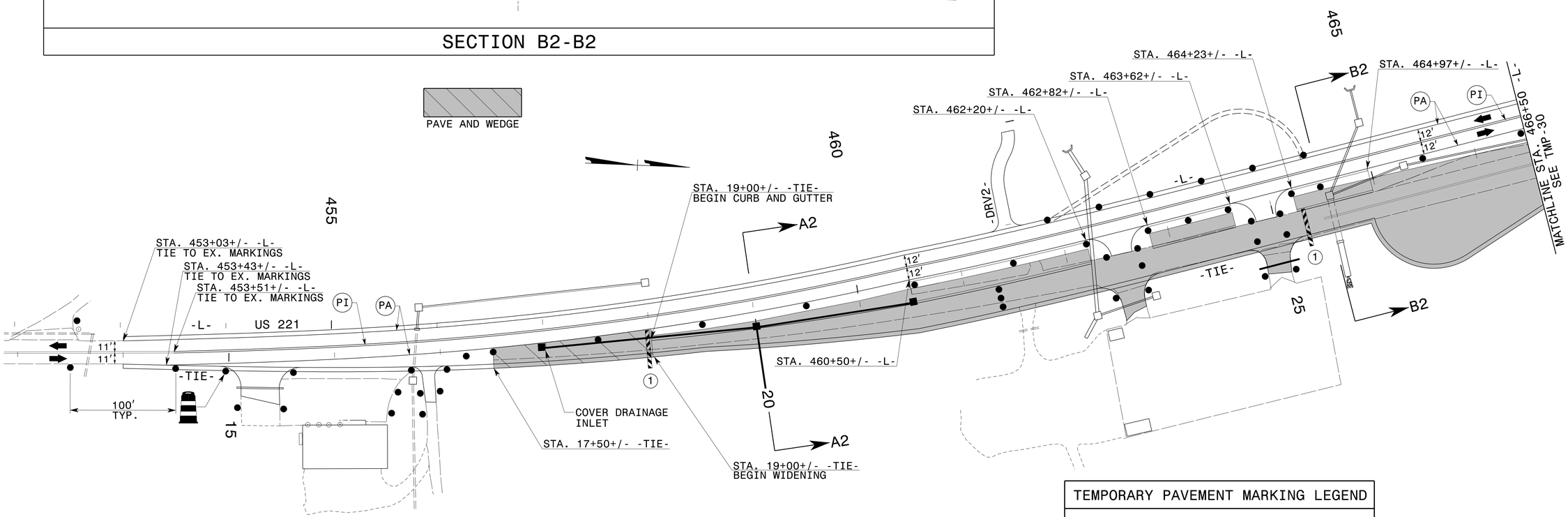

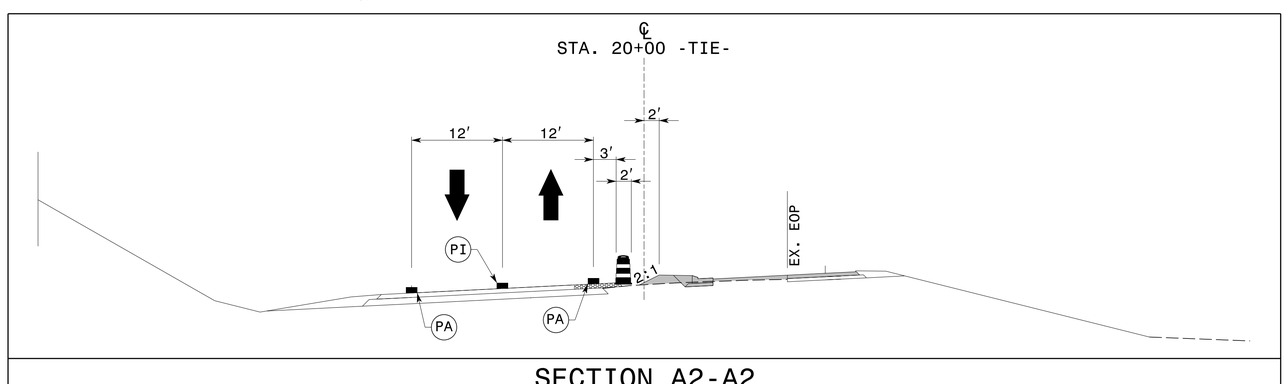

SECTION A2-A2

TEMPORARY PAVEMENT MARKING LEGEND

PA	PAINT - WHITE EDGELINE - (4")
PI	PAINT - YELLOW DOUBLE CENTER - (4")

REFER TO RSD NOS. 1205.01, 1205.02, 1250.01, AND 1251.01 FOR PLACEMENT OF TEMPORARY PAVEMENT MARKINGS AND MARKERS UNLESS NOTED OTHERWISE.

APPROVED: DocuSigned by: J. W. Woolard, Jr. DATE: 10/30/2014

SEAL

NORTH CAROLINA PROFESSIONAL SEAL 19862 ENGINEER J. W. WOOLARD JR.

DIVISION OF HIGHWAYS STATE OF NORTH CAROLINA DEPARTMENT OF TRANSPORTATION WORK ZONE TRAFFIC CONTROL

PHASE II DETAILS

10/24/2014
p:\tipprojects-r\r2915d\traffic\trafficcontrol\tcp\R2915D_TC_PH2_TMP29.dgn
Users:scoats