DocuSign Envelope ID: D289D98F-F883-46A5-AB4C-BF5D984FF1C6

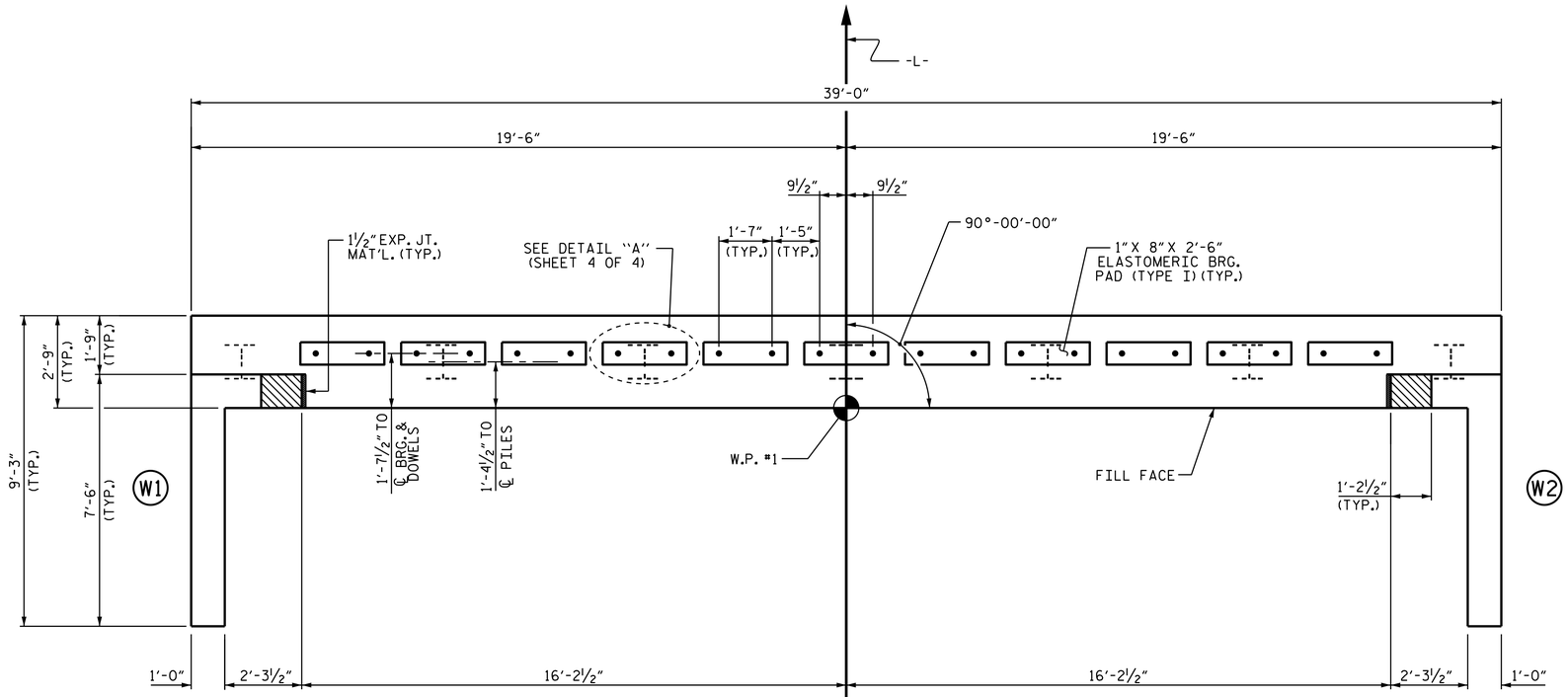

PLAN

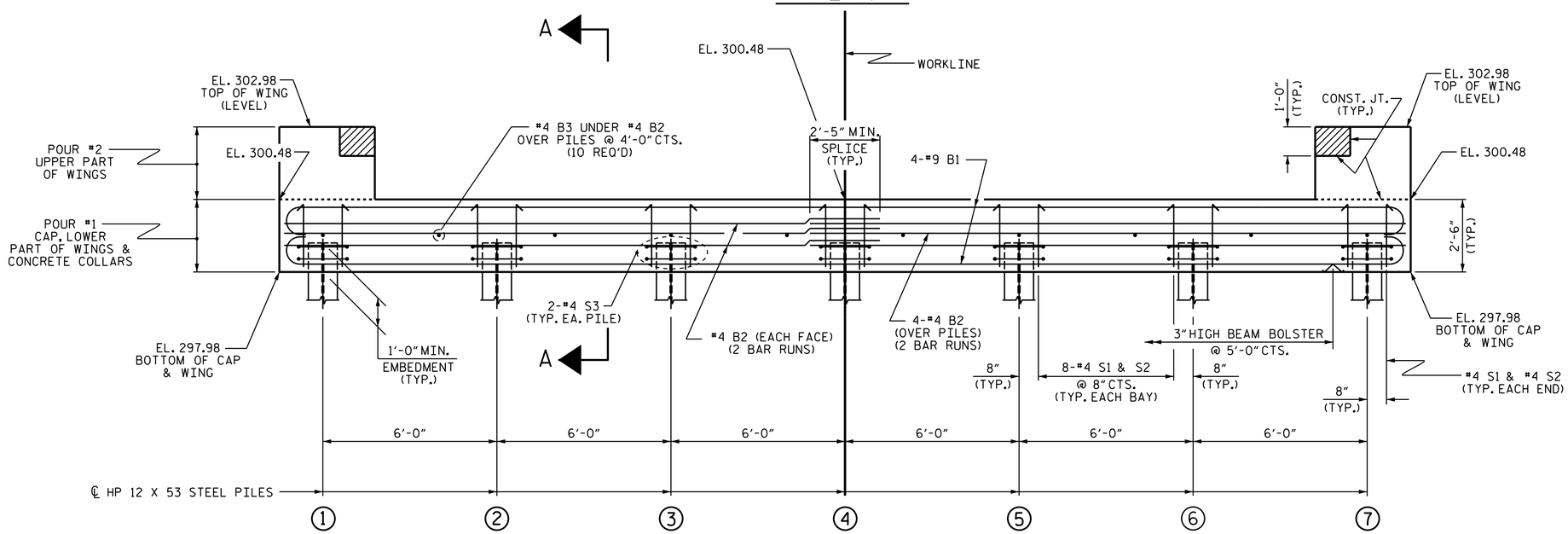

ELEVATION

WINGS NOT SHOWN FOR CLARITY.
FOR SECTION A-A, SEE SHEET 4 OF 4.
CONCRETE COLLARS FOR STEEL PILES NOT SHOWN IN PLAN AND ELEVATION VIEWS FOR CLARITY.
SEE "CORROSION PROTECTION FOR STEEL PILES DETAIL", SHEET 4 OF 4.

NOTES

STIRRUPS IN CAP MAY BE SHIFTED AS NECESSARY TO CLEAR DOWELS.

THE CONCRETE IN THE SHADED AREA OF THE WING SHALL BE POURED AFTER THE CONCRETE PARAPET IS CAST IF SLIP FORMING IS USED.

FOR PILE SPLICE DETAILS, SEE SHEET 4 OF 4.

FOR WING DETAILS, SEE SHEET 3 OF 4.

PROJECT NO. B-5113
WAKE COUNTY
STATION: 15+66.00 -L-

SHEET 1 OF 4

NORTH CAROLINA PROFESSIONAL SEAL 14855 ENGINEER DOUGLAS R. CALLHAN

DocuSigned by: Douglas R. Callhan 12EFE5C0D9C0D... 11/21/2014

STATE OF NORTH CAROLINA
DEPARTMENT OF TRANSPORTATION
RALEIGH

SUBSTRUCTURE

END BENT 1

ASSEMBLED BY : A. K. PATEL	DATE : 12/2013
CHECKED BY : W. F. PARKER	DATE : 1/2014
DRAWN BY : DGE 02/10	
CHECKED BY : MKT 02/10	

REVISIONS						SHEET NO.
NO.	BY:	DATE:	NO.	BY:	DATE:	S-9
1			3			TOTAL SHEETS
2			4			14

19-NOV-2014 15:10
R:\Structures\Plans\B-5113_SD_01_EB.dgn
asorsenginh

STD. NO. EB_33_90S