DocuSign Envelope ID: D289D98F-F883-46A5-AB4C-BF5D984FF1C6

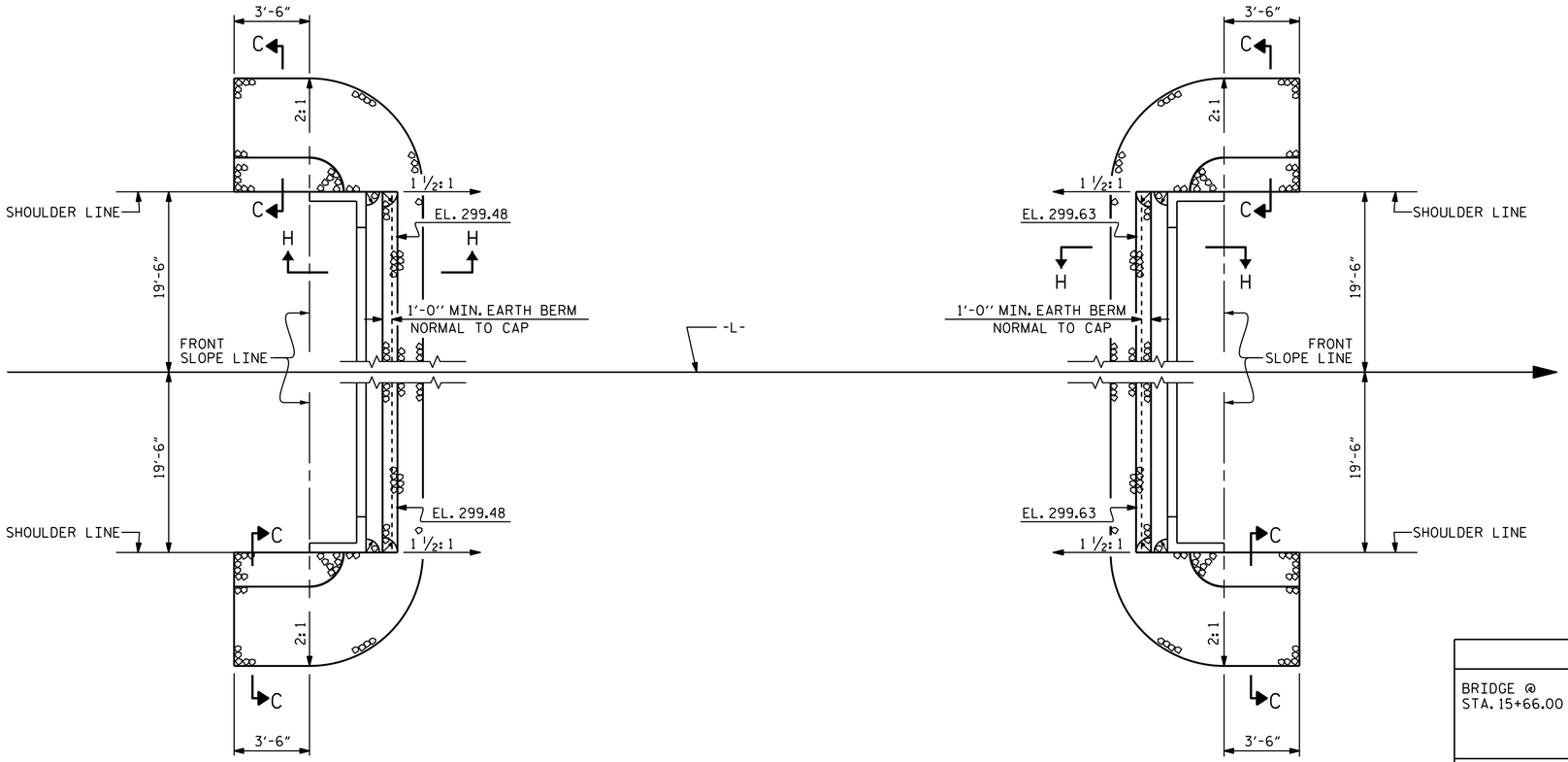

ESTIMATED QUANTITIES		
BRIDGE @ STA. 15+66.00 -L-	RIP RAP CLASS II (2'-0" THICK)	GEOTEXTILE FOR DRAINAGE
	TONS	SQUARE YARDS
END BENT 1	78	87
END BENT 2	76	84

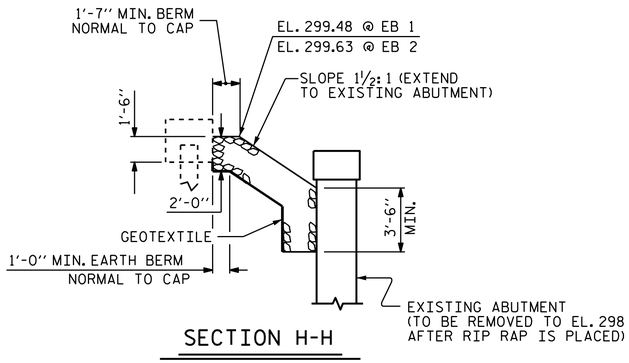

SECTION H-H

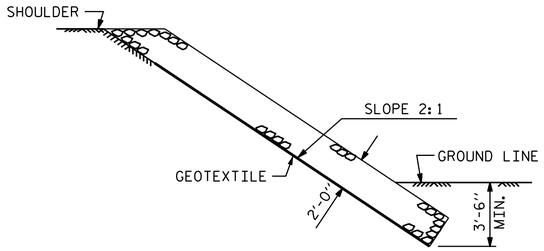

SECTION C-C

PROJECT NO. B-5113

WAKE COUNTY

STATION: 15+66.00 -L-

STATE OF NORTH CAROLINA
DEPARTMENT OF TRANSPORTATION
RALEIGH

STANDARD

RIP RAP DETAILS

NORTH CAROLINA PROFESSIONAL SEAL 14855 ENGINEER DOUGLAS R. CALHOUN

DocuSigned by: Douglas R. Calhoun
12EF61E0D0B240...
11/21/2014

REVISIONS							SHEET NO.
NO.	BY:	DATE:	NO.	BY:	DATE:		S-13
1			3				TOTAL SHEETS
2			4				14

ASSEMBLED BY : A. K. PATEL DATE : 12-17-13
CHECKED BY : W. F. PARKER DATE : 1-14

DRAWN BY : REK 1/84
CHECKED BY : RDU 1/84

REV. 5/1/06R TLA/GM
REV. 10/1/11 MAA/GM
REV. 12/21/11 MAA/GM

19-NOV-2014 15:14
R:\Structures\Plans\B-5113_SD_01_RR.dgn
asorsenginh

STD. NO. RR1