DocuSign Envelope ID: D289D98F-F883-46A5-AB4C-BF5D984FF1C6

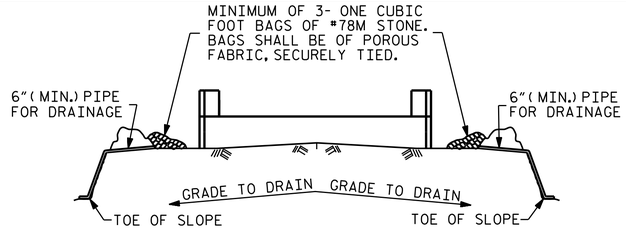

BAGGED STONE AND PIPE SHALL BE PLACED IMMEDIATELY AFTER COMPLETION OF END BENT EXCAVATION. PIPE MAY BE EITHER CONCRETE, CORRUGATED STEEL, CORRUGATED ALUMINUM ALLOY, OR CORRUGATED PLASTIC. PERFORATED PIPE WILL NOT BE ALLOWED.

BAGGED STONE SHALL REMAIN IN PLACE UNTIL THE ENGINEER DIRECTS THAT IT BE REMOVED. THE CONTRACTOR SHALL REMOVE AND DISPOSE OF SILT ACCUMULATIONS AT BAGGED STONE WHEN SO DIRECTED BY THE ENGINEER. BAGS SHALL BE REMOVED AND REPLACED WHENEVER THE ENGINEER DETERMINES THAT THEY HAVE DETERIORATED AND LOST THEIR EFFECTIVENESS.

NO SEPARATE PAYMENT WILL BE MADE FOR THIS WORK AND THE ENTIRE COST OF THIS WORK SHALL BE INCLUDED IN THE UNIT CONTRACT PRICE BID FOR THE SEVERAL PAY ITEMS.

TEMPORARY DRAINAGE AT END BENT

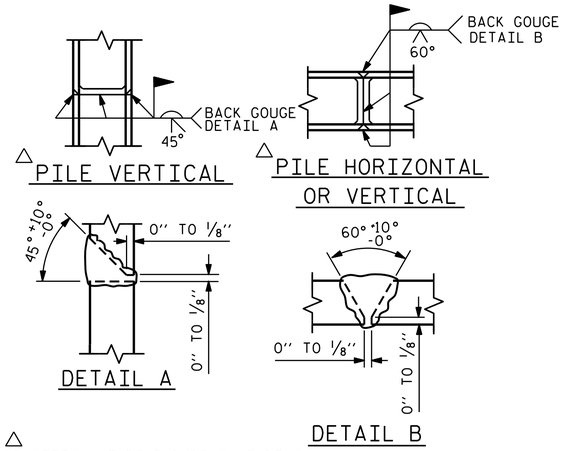

△ POSITION OF PILE DURING WELDING.

PILE SPLICE DETAILS

BAR TYPES

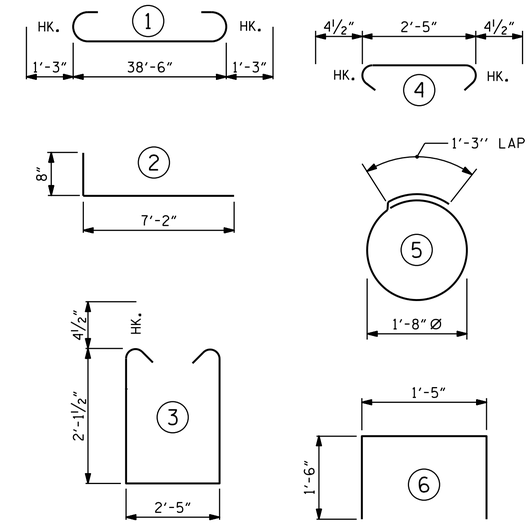

ALL BAR DIMENSIONS ARE OUT TO OUT.

END BENT 1	END BENT 2
HP 12 X 53 STEEL PILES	HP 12 X 53 STEEL PILES
NO: 7 LIN. FT.= 125	NO: 7 LIN. FT.= 160

BILL OF MATERIAL FOR ONE END BENT

BAR	NO.	SIZE	TYPE	LENGTH	WEIGHT
B1	8	#9	1	41'-0"	1115
B2	16	#4	STR	20'-7"	220
B3	10	#4	STR	2'-5"	16
D1	22	#6	STR	1'-6"	50
H1	24	#4	2	7'-10"	126
K1	12	#4	STR	2'-11"	23
S1	50	#4	3	7'-5"	248
S2	50	#4	4	3'-2"	106
S3	14	#4	5	6'-6"	61
V1	48	#4	STR	4'-8"	150

REINFORCING STEEL (FOR ONE END BENT) 2115 LBS.

CLASS A CONCRETE BREAKDOWN (FOR ONE END BENT)

POUR #1 CAP, LOWER PART OF WINGS & COLLARS 12.4 C.Y.

POUR #2 UPPER PART OF WINGS 1.8 C.Y.

TOTAL CLASS A CONCRETE 14.2 C.Y.

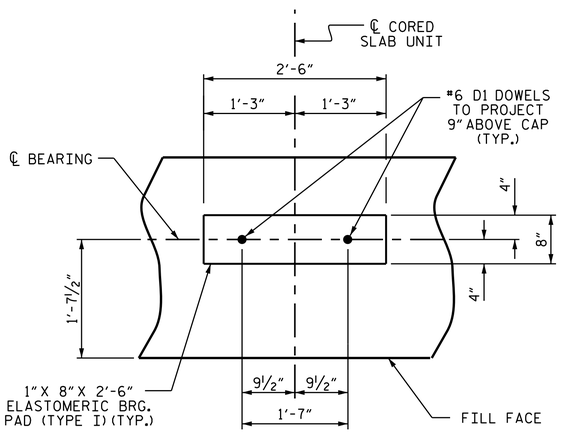

DETAIL "A"

(END BENT 1 SHOWN, END BENT 2 SIMILAR BY ROTATION)

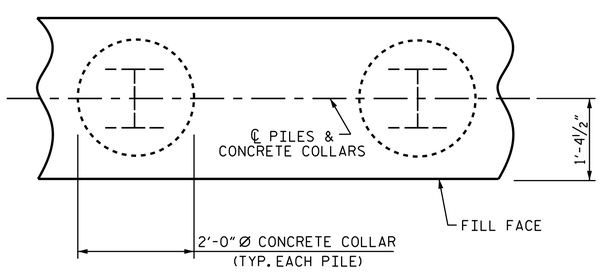

PLAN

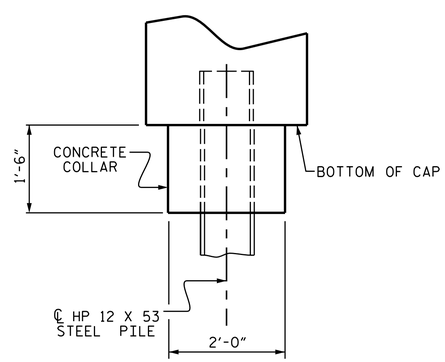

ELEVATION

CORROSION PROTECTION FOR STEEL PILES DETAIL

(END BENT 1 SHOWN, END BENT 2 SIMILAR BY ROTATION)

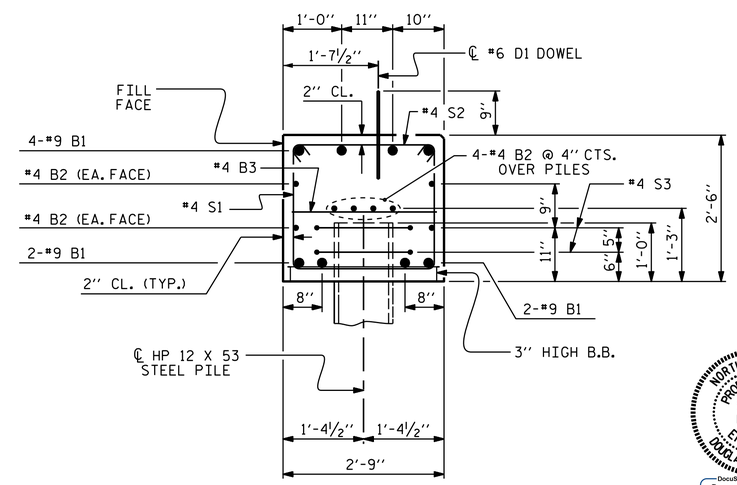

SECTION A-A

(CONCRETE COLLAR NOT SHOWN FOR CLARITY. SEE "CORROSION PROTECTION FOR STEEL PILES DETAIL.")

NORTH CAROLINA PROFESSIONAL SEAL 14855 ENGINEER DOUGLAS R. CALHOUN

DocuSigned by: Douglas R. Calhoun 12EE4F2B9B2B4F4... 11/21/2014

PROJECT NO. B-5113

WAKE COUNTY

STATION: 15+66.00 -L-

SHEET 4 OF 4

STATE OF NORTH CAROLINA
DEPARTMENT OF TRANSPORTATION
RALEIGH

SUBSTRUCTURE

END BENT 1 & 2 DETAILS

REVISIONS						SHEET NO.
NO.	BY:	DATE:	NO.	BY:	DATE:	S-12
1			3			TOTAL SHEETS
2			4			14

ASSEMBLED BY : A. K. PATEL DATE : 12/2013
CHECKED BY : W. F. PARKER DATE : 1/2014

DRAWN BY : DGE 02/10
CHECKED BY : MKT 02/10

19-NOV-2014 15:12
R:\Structures\Plans\B-5113_SD_01_EB.dgn
asorsenginh

STD. NO. EB_33_90S