DocuSign Envelope ID: D289D98F-F883-46A5-AB4C-BF5D984FF1C6

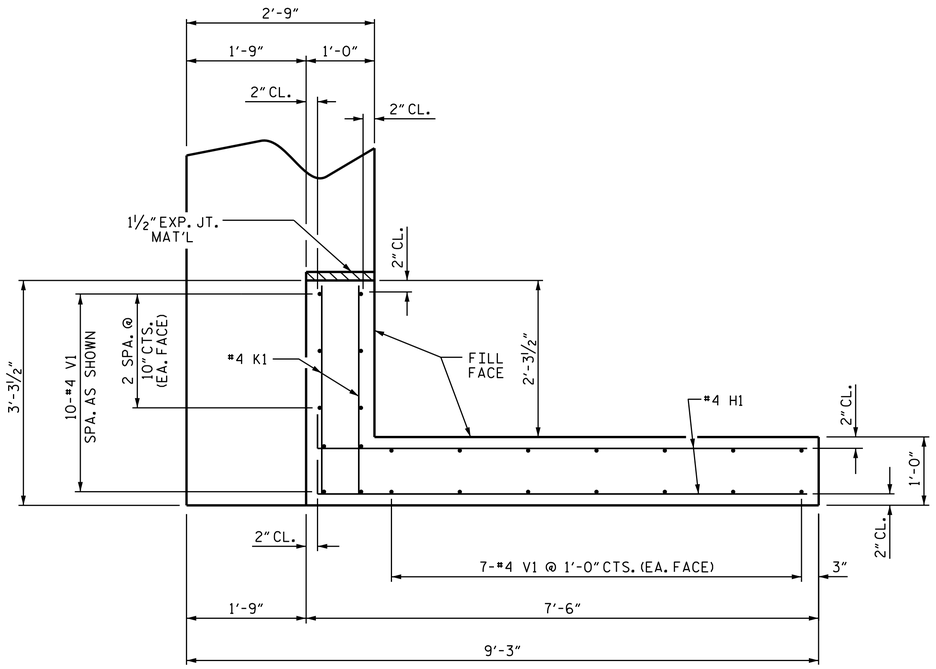

PLAN OF WING (W1)

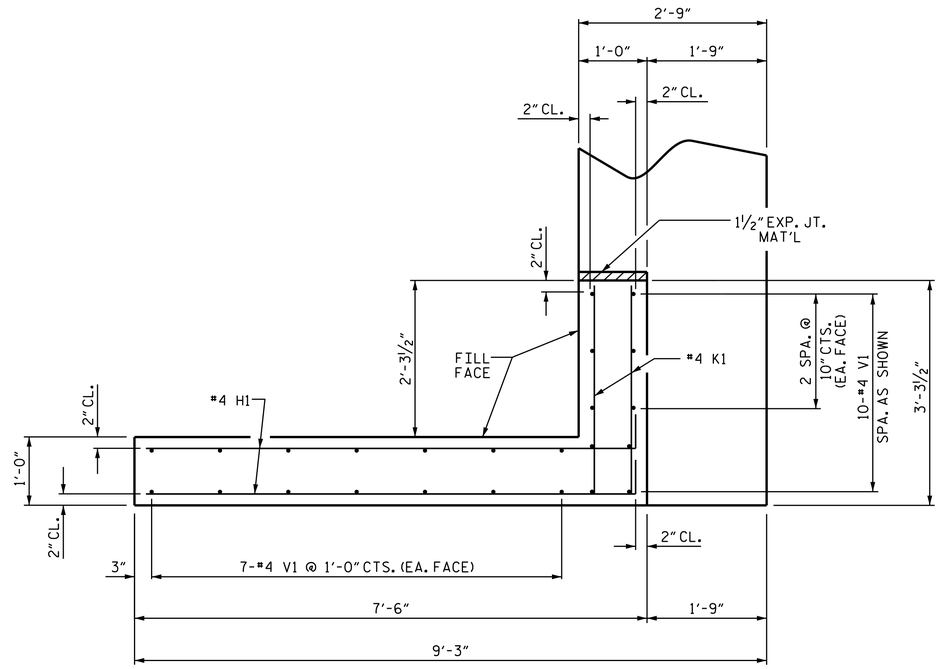

PLAN OF WING (W2)

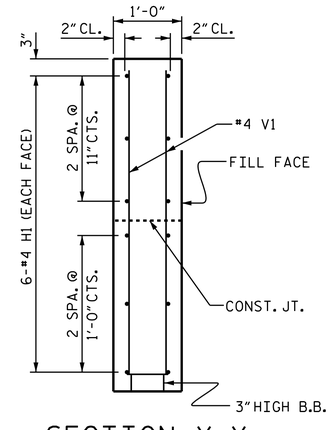

SECTION X-X

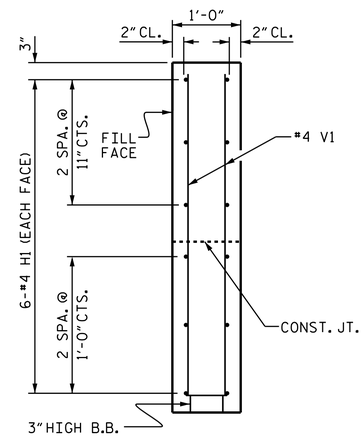

SECTION Y-Y

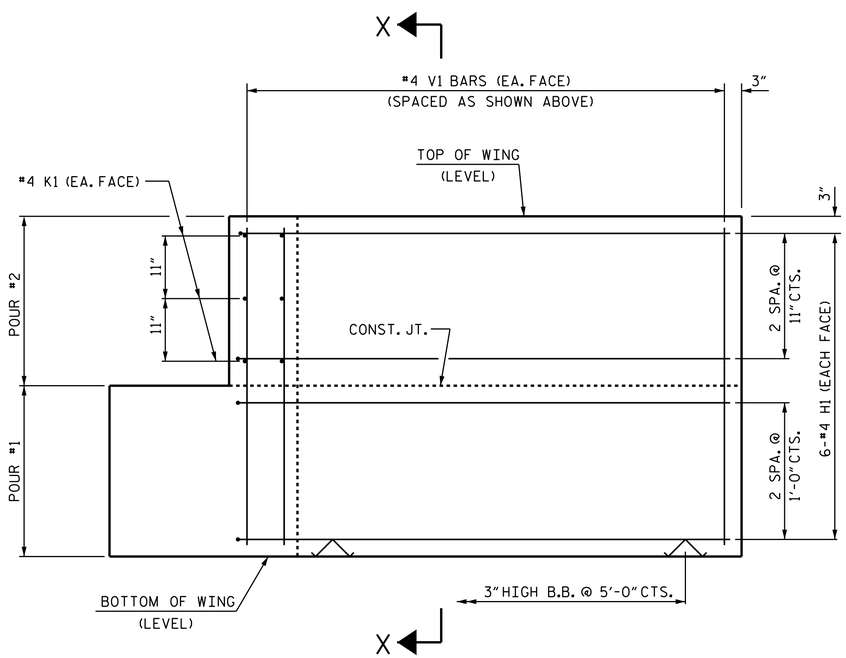

ELEVATION OF WING (W1)

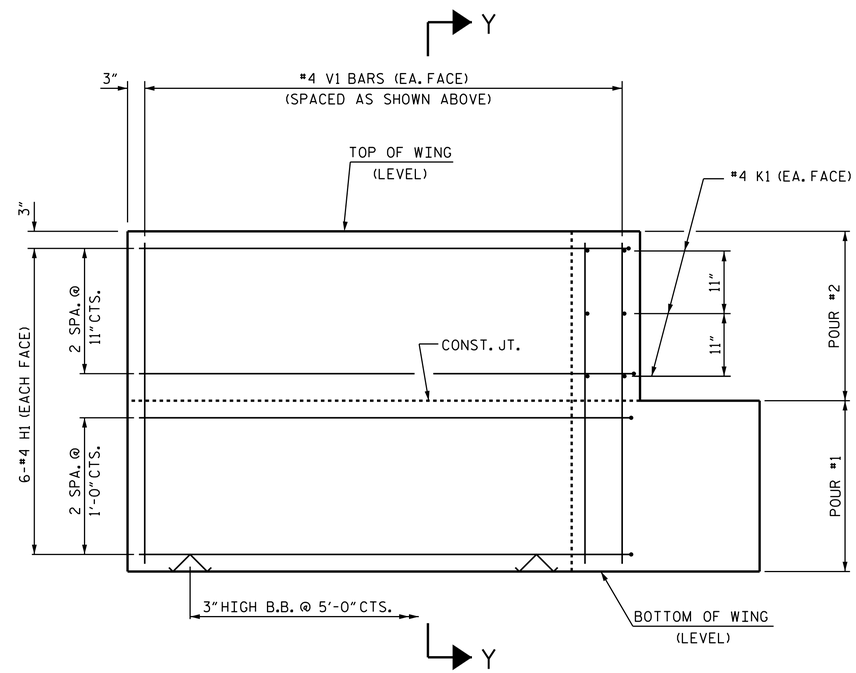

ELEVATION OF WING (W2)

WING DETAILS

PROJECT NO. B-5113

WAKE COUNTY

STATION: 15+66.00 -L-

SHEET 3 OF 4

STATE OF NORTH CAROLINA
DEPARTMENT OF TRANSPORTATION
RALEIGH

SUBSTRUCTURE

END BENT
WING DETAILS

NORTH CAROLINA PROFESSIONAL SEAL 14855 ENGINEER DOUGLAS R. CALHOUN

DocuSigned by: Douglas R. Calhoun 12EFE12C0D2C4AD 11/21/2014

REVISIONS						SHEET NO.
NO.	BY:	DATE:	NO.	BY:	DATE:	S-11
1			3			TOTAL SHEETS
2			4			14

ASSEMBLED BY :	A. K. PATEL	DATE :	12/2013
CHECKED BY :	W. F. PARKER	DATE :	1/2014
DRAWN BY :	DGE	02/10	
CHECKED BY :	MKT	02/10	

19-NOV-2014 15:12
R:\Structures\Plans\B-5113_SD_01_EB.dgn
asorsenginh

STD. NO. EB_33_90S