DocuSign Envelope ID: 940AF3A0-F3A6-45EA-B643-19BA5BE0B810

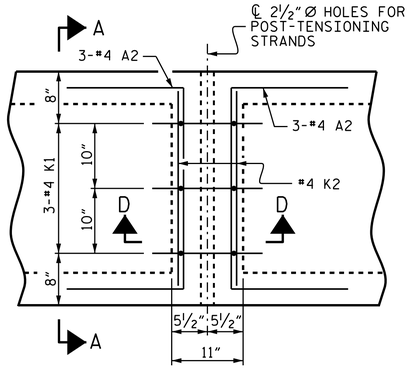

PLAN

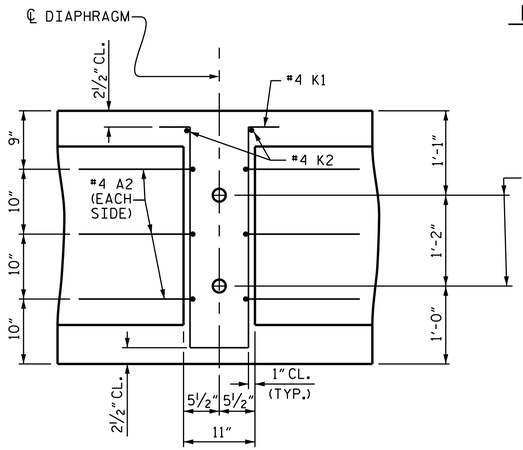

SECTION D-D

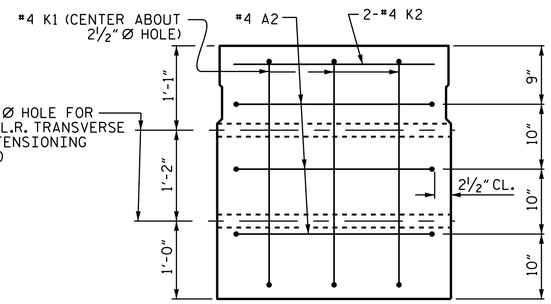

SECTION A-A
VOIDS NOT SHOWN

DOUBLE DIAPHRAGM DETAILS

#4 "S" BARS NOT SHOWN. #4 "S" BARS MAY BE SHIFTED SLIGHTLY TO CLEAR 2½" Ø HOLE.

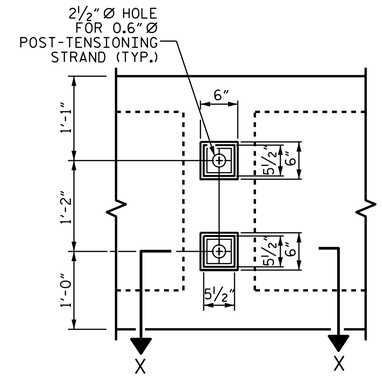

VIEW Y-Y
SHOWING ELEVATION VIEW OF GROUTED RECESS

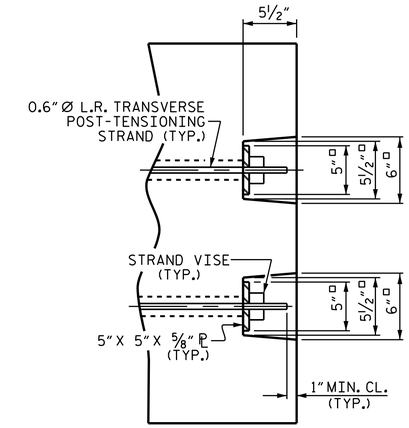

DETAIL "C"

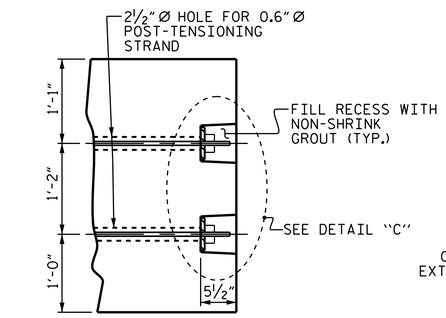

PART SECTION AT RECESS

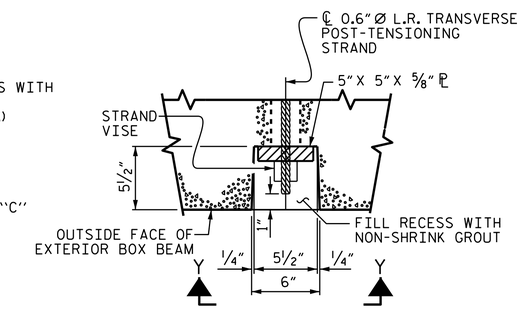

SECTION X-X
SHOWING PLAN VIEW OF GROUTED RECESS

GROUTED RECESS DETAIL AT END OF POST-TENSIONED STRANDS OF EXTERIOR BOX BEAM

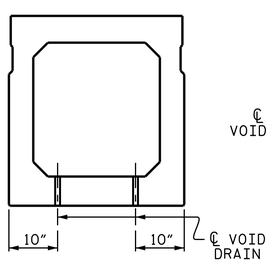

SECTION B-B

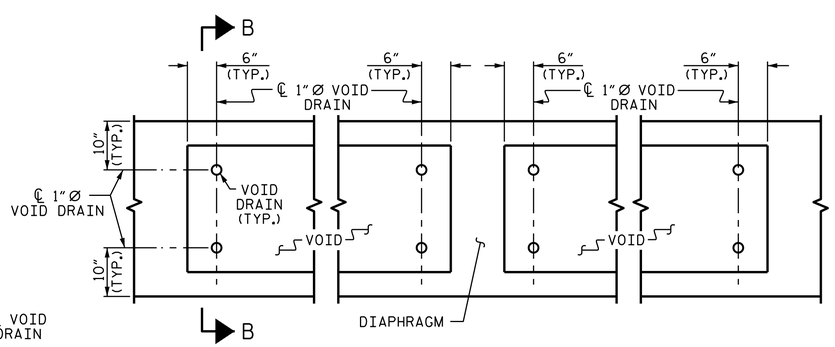

PART PLAN

VOID DRAIN DETAILS

(DIMENSIONS SHOWN ARE TYPICAL FOR EACH VOID)

DEAD LOAD DEFLECTION AND CAMBER		
	3'-0" x 3'-3"	
	0.6" Ø L.R. STRAND	
	SPAN "A"	SPAN "B"
BOX BEAM UNIT	100'	95'
CAMBER (BEAM ALONE IN PLACE)	2" ↑	2" ↑
DEFLECTION DUE TO SUPERIMPOSED DEAD LOAD ✱✱	⅞" ↓	⅞" ↓
FINAL CAMBER	1⅛" ↑	1⅛" ↑

✱✱ INCLUDES FUTURE WEARING SURFACE

PROJECT NO. B-4803
ROCKINGHAM COUNTY
STATION: 16+05.00 -L-

SHEET 6 OF 7

NORTH CAROLINA PROFESSIONAL SEAL 14855 ENGINEER DOUGLAS R. CALHOUN

DocuSigned by: Douglas R. Calhoun
11/20/2014

STATE OF NORTH CAROLINA
DEPARTMENT OF TRANSPORTATION
RALEIGH

STANDARD
3'-0" X 3'-3"
PRESTRESSED CONCRETE
BOX BEAM UNIT
SPANS A & B

REVISIONS						SHEET NO.
NO.	BY:	DATE:	NO.	BY:	DATE:	S-11
1			3			TOTAL SHEETS
2			4			24

ASSEMBLED BY : ASHVIN PATEL DATE : 5-15-13
CHECKED BY : A. SORSENGINH DATE : 7/2013
DRAWN BY : DGE 11/11
CHECKED BY : TMG 11/11
REV. 8/14 MAA/TMG

19-NOV-2014 11:21
R:\Structures\Plans\Superstructure\B-4803_SD_BX.dgn
asorsenginh

STD.NO.39PCBB7_90S