DocuSign Envelope ID: 940AF3A0-F3A6-45EA-B643-19BA5BE0B810

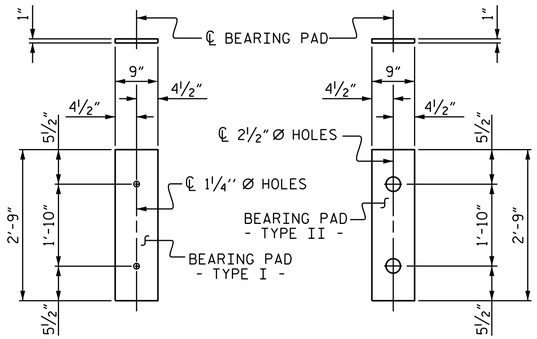

FIXED END
(TYPE I - 33 REQ'D)

EXPANSION END
(TYPE II - 11 REQ'D)

ELASTOMERIC BEARING DETAILS

ELASTOMER IN ALL BEARINGS SHALL BE 60 DUROMETER HARDNESS.

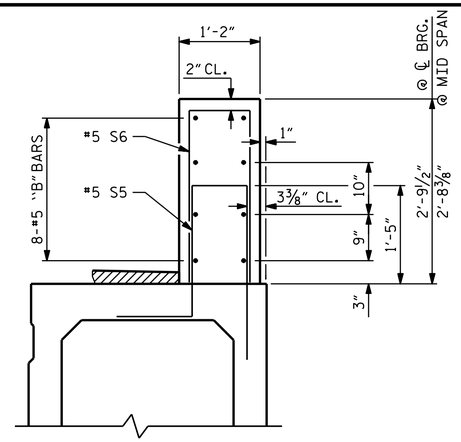

TWO BAR METAL RAIL PARAPET SECTION

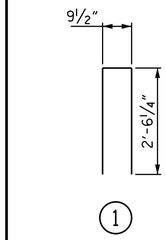

BAR TYPE

BAR DIMENSIONS ARE OUT TO OUT

BILL OF MATERIAL FOR PARAPETS AND END POSTS

BAR	NO.	SIZE	TYPE	LENGTH	WEIGHT
* B8	64	#5	STR	24'-7"	1641
* B9	64	#5	STR	23'-4"	1558
* E1	8	#7	STR	2'-10"	46
* E2	8	#7	STR	3'-4"	55
* E3	8	#7	STR	3'-10"	63
* E4	8	#7	STR	4'-4"	71
* E5	8	#7	STR	4'-8"	76
* F1	8	#6	STR	1'-10"	22
* F2	8	#6	STR	3'-0"	36
* F3	8	#6	STR	3'-8"	44
* S6	540	#5	1	5'-10"	3285
EPOXY COATED REINF. STEEL			LBS.		6897
CLASS AA CONCRETE			CU. YDS.		47.1
1'-2" X 2'-9½" CONC. PARAPET			LIN. FT.		390.25

NOTE: #5 S5 BARS ARE INCLUDED IN THE BILL OF MATERIAL FOR BOX BEAM SECTION

GUTTERLINE ASPHALT THICKNESS & PARAPET HEIGHT

	ASPHALT OVERLAY THICKNESS @ MID-SPAN	PARAPET HEIGHT @ MID-SPAN
100' UNITS	2⅜"	2'-8⅜"
95' UNITS	2⅜"	2'-8⅜"

BOX BEAM UNITS REQUIRED

		NUMBER	LENGTH	TOTAL LENGTH
SPAN A	EXTERIOR B.B.	2	100'-0"	200'-0"
	INTERIOR B.B.	9	100'-0"	900'-0"
SPAN B	EXTERIOR B.B.	2	95'-0"	190'-0"
	INTERIOR B.B.	9	95'-0"	855'-0"
	TOTAL	22	———	2145'-0"

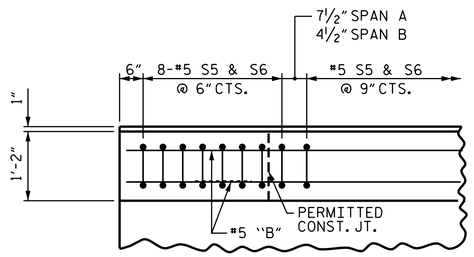

PLAN OF PARAPET

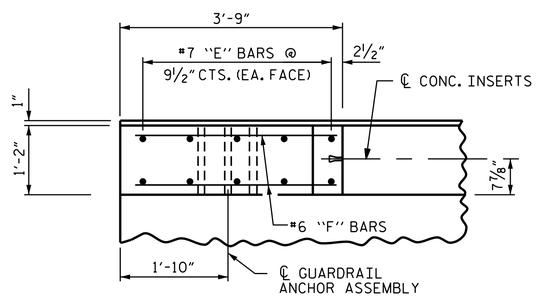

PLAN OF END POST

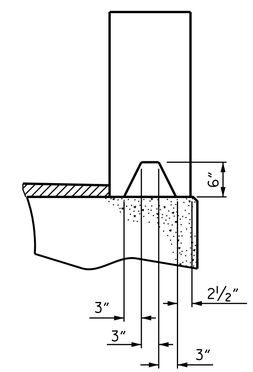

SECTION S-S

AT DAM IN OPEN JOINT
(THIS IS TO BE USED ONLY WHEN SLIP FORM IS USED)

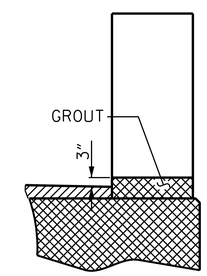

SECTION T-T

AT OPEN JOINT AT BENT
(THIS IS TO BE USED WHERE FOAM JOINT IS NOT USED)

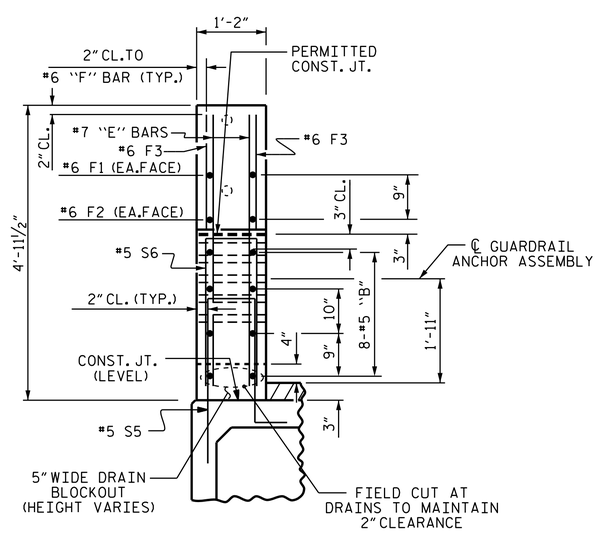

END VIEW

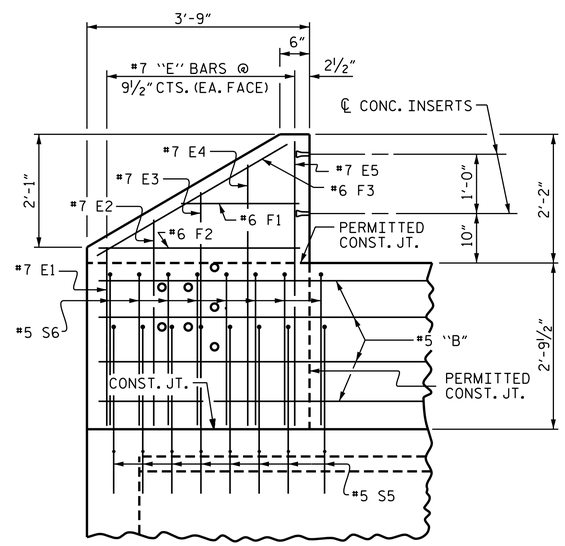

ELEVATION

PARAPET AND END POST FOR TWO BAR RAIL

℄ ½" EXP. JT. MAT'L HELD IN PLACE WITH GALVANIZED NAILS. (NOTE: OMIT EXP. JT. MAT'L. WHEN SLIP FORM IS USED)

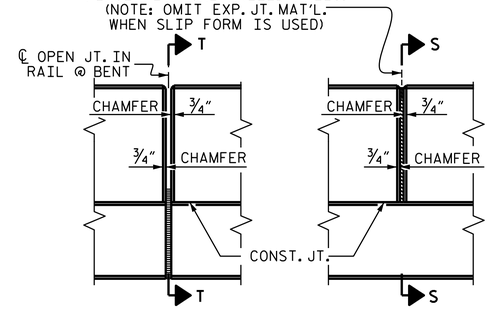

ELEVATION AT EXPANSION JOINTS

PARAPET DETAILS

NOTES

FOR DETAILS OF CONCRETE INSERT AND GUARDRAIL ANCHOR ASSEMBLY, SEE "RAIL POST SPACINGS AND END OF RAIL DETAILS" SHEETS.

ALL REINFORCING STEEL IN CONCRETE PARAPETS AND END POSTS SHALL BE EPOXY COATED.

THE REINFORCING STEEL & CONCRETE IN THE END POSTS IS INCLUDED IN THE UNIT PRICE BID FOR THE CONCRETE PARAPET.

THE MAXIMUM PARAPET HEIGHT AND ASPHALT THICKNESS IS SHOWN ON THE TYPICAL SECTION. THE HEIGHT OF THE PARAPET AND ASPHALT THICKNESS VARIES WHILE THE TOP OF THE PARAPET FOLLOWS THE PROFILE OF THE GUTTERLINE.

PROJECT NO. B-4803
ROCKINGHAM COUNTY
STATION: 16+05.00 -L-

SHEET 7 OF 7

STATE OF NORTH CAROLINA
DEPARTMENT OF TRANSPORTATION
RALEIGH

3'-0" X 3'-3" PRESTRESSED CONCRETE BOX BEAM UNIT

NORTH CAROLINA PROFESSIONAL SEAL 14855 ENGINEER DOUGLAS R. CALHOUN

DocuSigned by: Douglas R. Calhoun
12EFE12F0292440...
11/20/2014

REVISIONS							SHEET NO.
NO.	BY:	DATE:	NO.	BY:	DATE:		S-12
1			3				TOTAL SHEETS
2			4				24

DRAWN BY : ASHVIN PATEL DATE : 05/15/13
CHECKED BY : A. SORSENGINH DATE : 7/2013