DocuSign Envelope ID: 940AF3A0-F3A6-45EA-B643-19BA5BE0B810

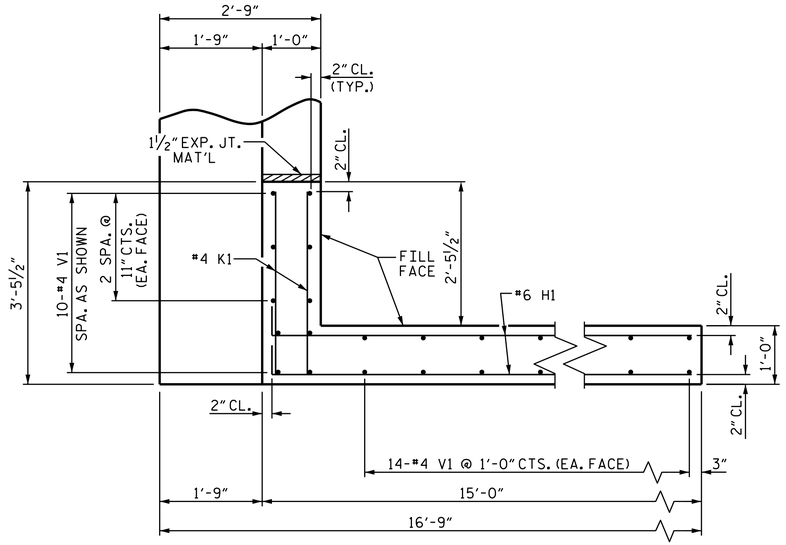

PLAN OF WING (W1)

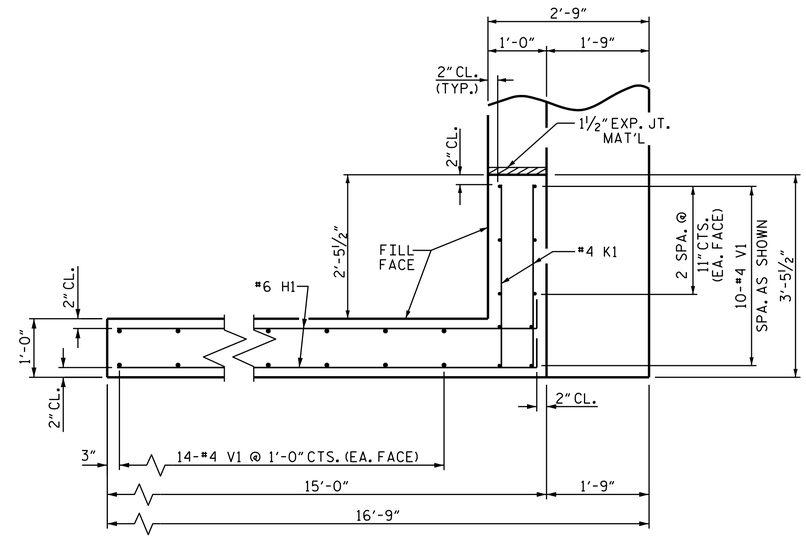

PLAN OF WING (W2)

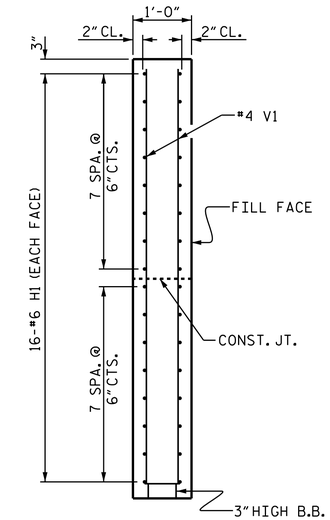

SECTION X-X

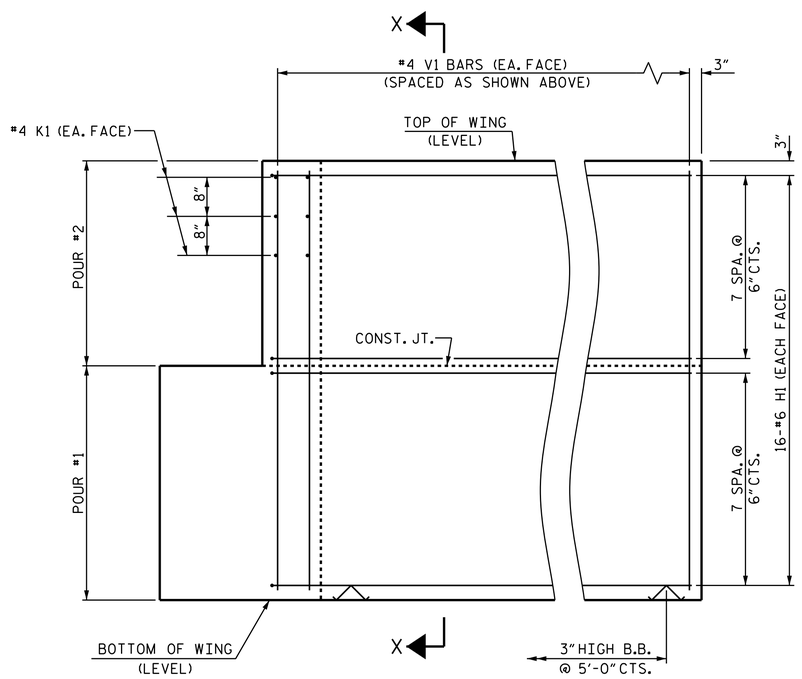

ELEVATION OF WING (W1)

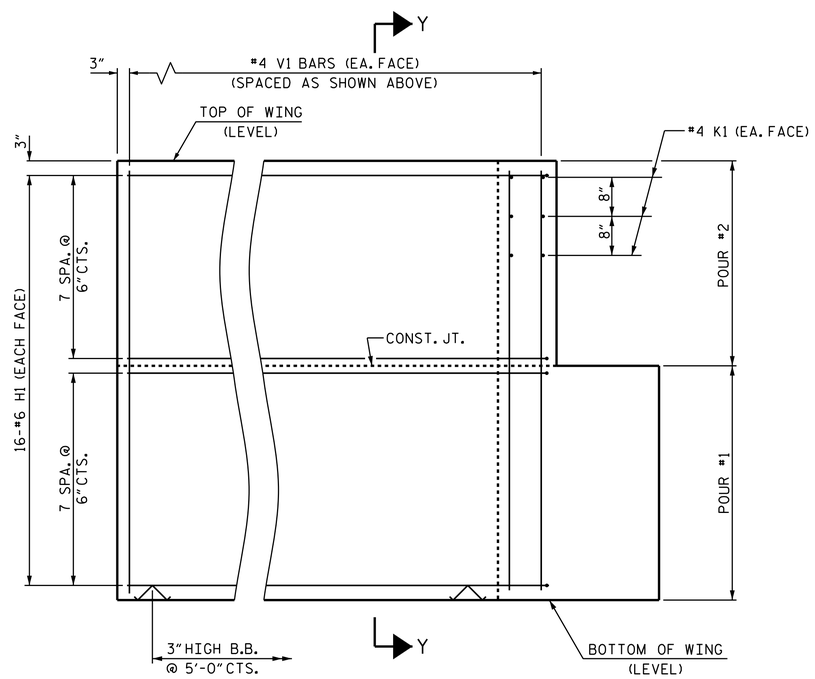

ELEVATION OF WING (W2)

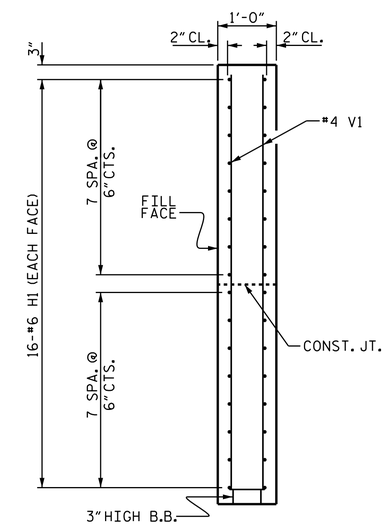

SECTION Y-Y

WING DETAILS

PROJECT NO. B-4803
ROCKINGHAM COUNTY
STATION: 16+05.00 -L-

SHEET 3 OF 4

STATE OF NORTH CAROLINA
DEPARTMENT OF TRANSPORTATION
RALEIGH

SUBSTRUCTURE

END BENT
WING DETAILS

NORTH CAROLINA PROFESSIONAL SEAL 14855 ENGINEER DOUGLAS R. CALHOUN
DocuSigned by: Douglas R. Calhoun
12EFE12F0292440...
11/20/2014

REVISIONS						SHEET NO.
NO.	BY:	DATE:	NO.	BY:	DATE:	S-19
1			3			TOTAL SHEETS
2			4			24

ASSEMBLED BY :	ASHVIN PATEL	DATE : 05/2013	
CHECKED BY :	A. SORSENGINH	DATE : 07/2013	
DRAWN BY : WJH 12/11	REV. 8/14	MAA/TMG	
CHECKED BY : AAC 12/11			

19-NOV-2014 11:29
R:\Structures\Plans\Substructure\B-4803_SD_E*.dgn
asorsenginh

STD. NO. EB_33_90S4_39BB