DocuSign Envelope ID: 940AF3A0-F3A6-45EA-B643-19BA5BE0B810

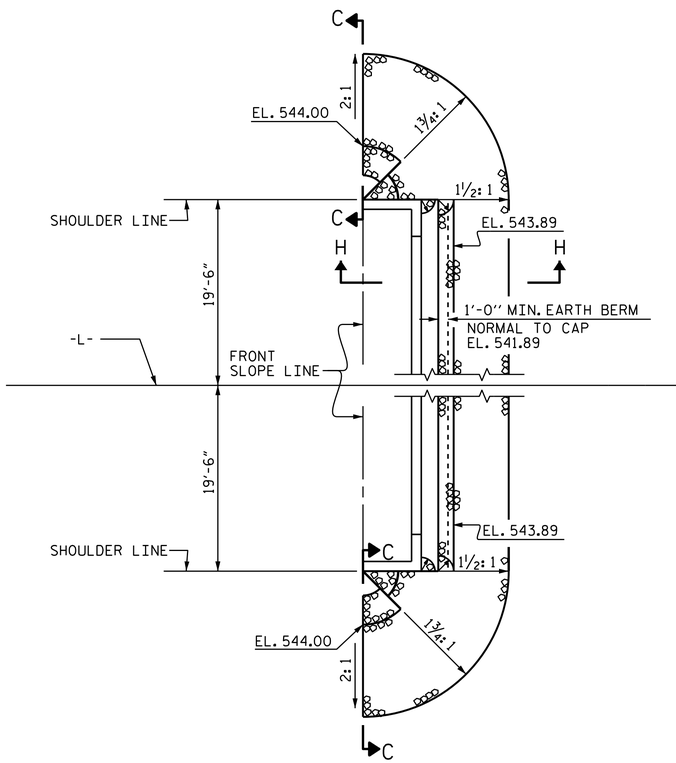

END BENT 1

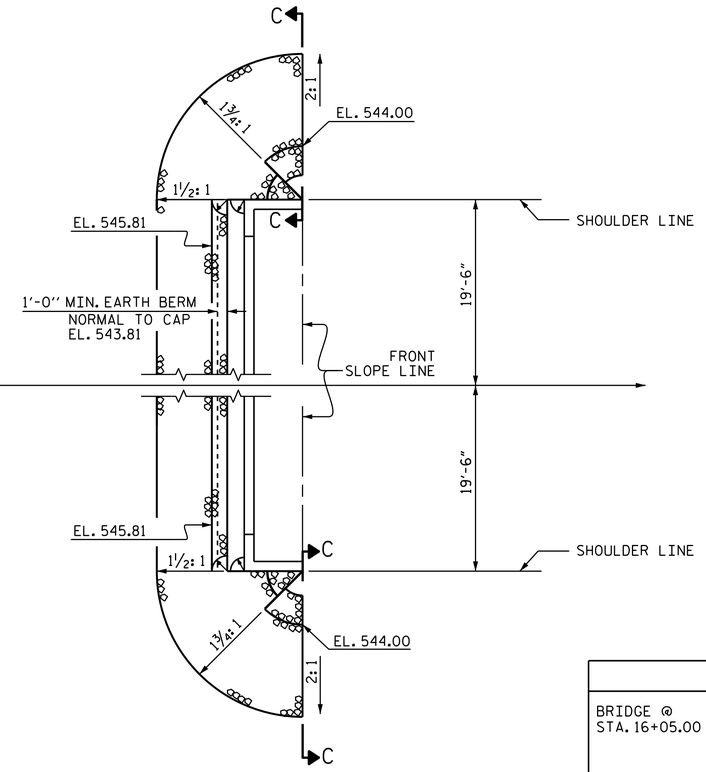

END BENT 2

ESTIMATED QUANTITIES		
BRIDGE @ STA. 16+05.00 -L-	RIP RAP CLASS II (2'-0" THICK)	GEOTEXTILE FOR DRAINAGE
	TONS	SQUARE YARDS
END BENT 1	150	165
END BENT 2	55	65

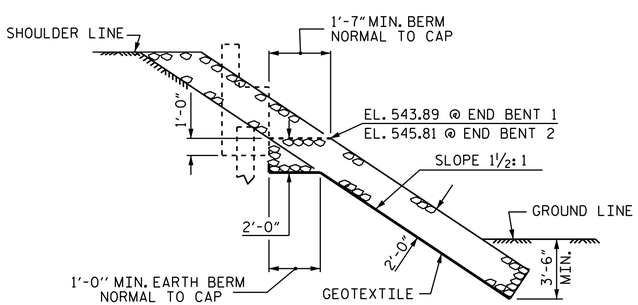

SECTION H-H

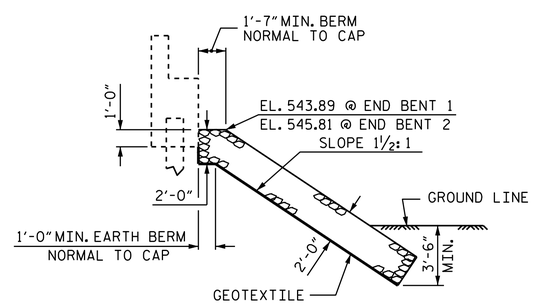

℄ SECTION
BERM RIP RAPPED

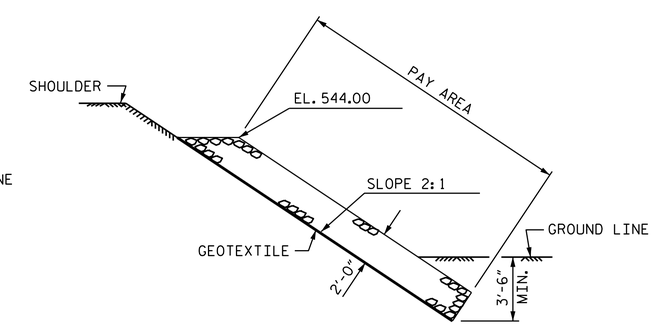

SECTION C-C

PROJECT NO. B-4803
ROCKINGHAM COUNTY
STATION: 16+05.00 -L-

STATE OF NORTH CAROLINA
DEPARTMENT OF TRANSPORTATION
RALEIGH

STANDARD

RIP RAP DETAILS

NORTH CAROLINA PROFESSIONAL SEAL 14855 ENGINEER DOUGLAS R. CALHOUN

DocuSigned by: Douglas R. Calhoun
126FE12F0292440...
11/20/2014

ASSEMBLED BY :	A. K. PATEL	DATE :	3/2014
CHECKED BY :	D. R. CALHOUN	DATE :	10/2014

DRAWN BY : REK 1/84	REV. 5/1/06R	TLA/GM
CHECKED BY : RDU 1/84	REV. 10/1/11	MAA/GM
	REV. 12/21/11	MAA/GM

REVISIONS							
NO.	BY:	DATE:	NO.	BY:	DATE:	SHEET NO.	S-23
1			3			TOTAL SHEETS	24
2			4				

19-NOV-2014 11:32
R:\Structures\Plans\Miscellaneous Drawing\B-4803_SD_RR.dgn
asorsenginh

STD. NO. RR1