DocuSign Envelope ID: 940AF3A0-F3A6-45EA-B643-19BA5BE0B810

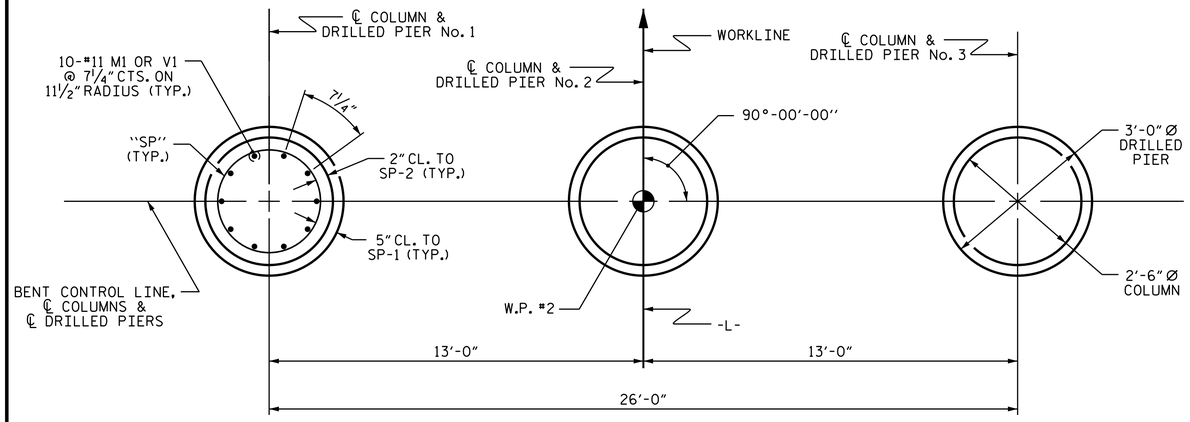

PLAN OF DRILLED PIERS & COLUMNS

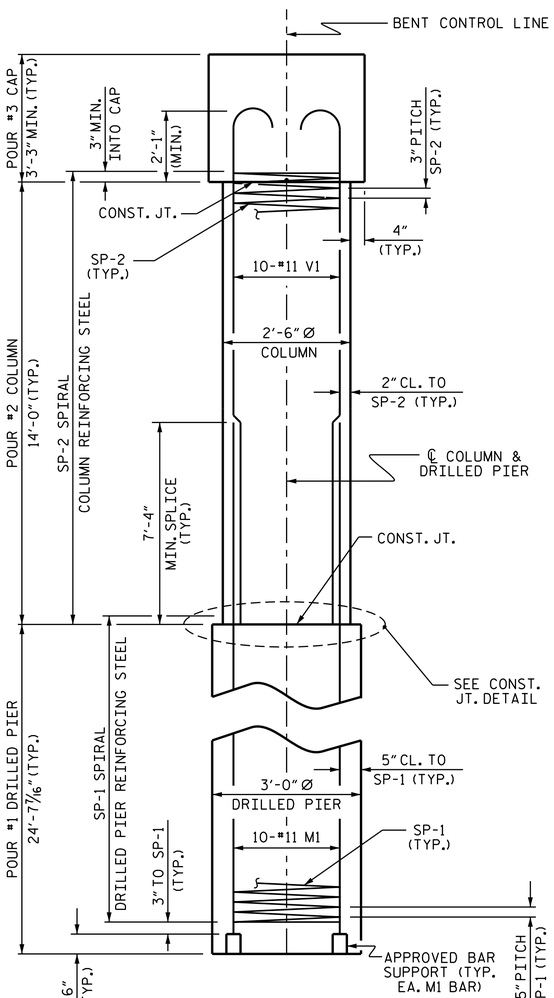

END ELEVATION

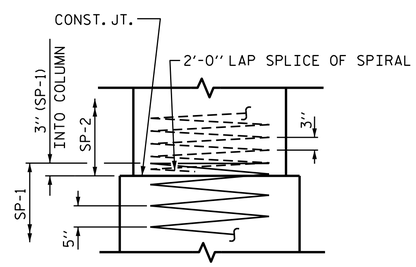

CONSTRUCTION JOINT DETAIL

BAR TYPES

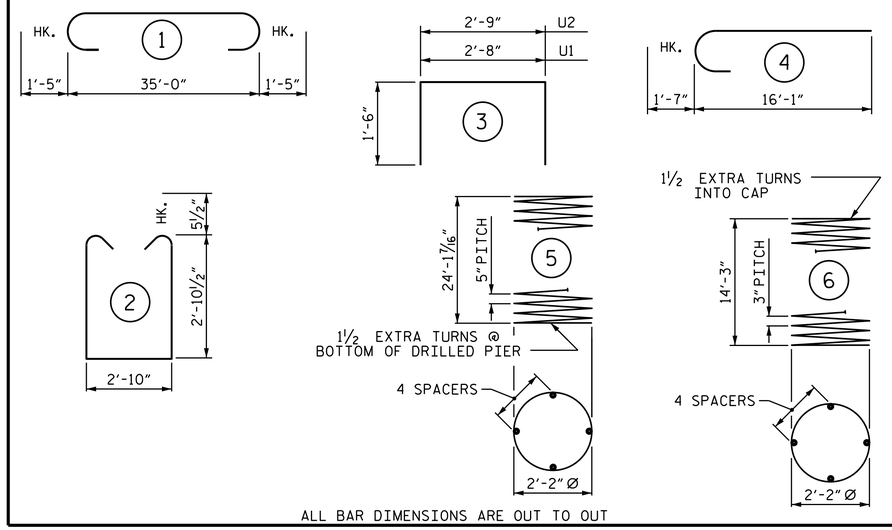

ALL BAR DIMENSIONS ARE OUT TO OUT

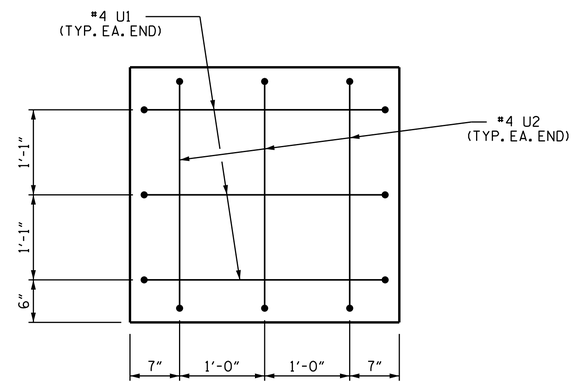

END OF CAP VIEW

(TYPICAL BOTH ENDS)

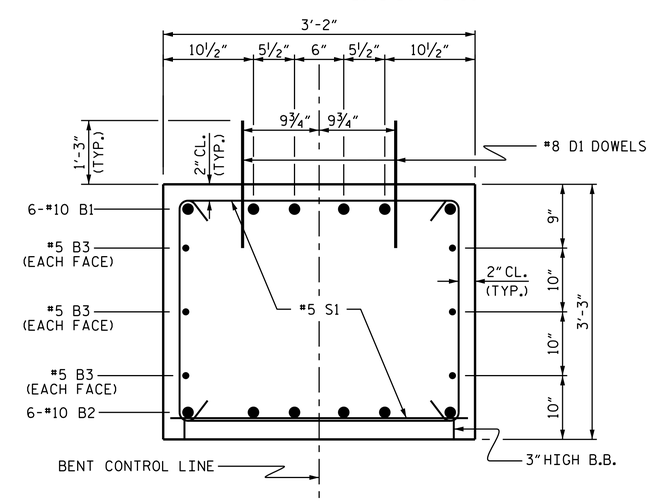

SECTION THRU CAP

BILL OF MATERIAL FOR ONE BENT

BAR	NO.	SIZE	TYPE	LENGTH	WEIGHT
B1	6	#10	1	37'-10"	977
B2	6	#10	STR	35'-2"	908
B3	6	#5	STR	35'-2"	220
D1	44	#8	STR	2'-3"	264
M1	30	#11	STR	34'-9"	5539
S1	60	#5	2	9'-6"	595
U1	6	#4	3	5'-8"	23
U2	6	#4	3	5'-9"	23
V1	30	#11	4	17'-8"	2816

REINFORCING STEEL (FOR ONE BENT) 11,365 LBS.

SP-1	3	*	5	395'-4"	1237
SP-2	3	**	6	390'-10"	783

SPIRAL COLUMN REINFORCING STEEL (FOR ONE BENT) 2020 LBS.

* THE SP-1 SPIRAL REINFORCING STEEL SHALL BE W31 OR D-31 COLD DRAWN WIRE OR #5 PLAIN OR DEFORMED BAR

** THE SP-2 SPIRAL REINFORCING STEEL SHALL BE W20 OR D-20 COLD DRAWN WIRE OR #4 PLAIN OR DEFORMED BAR

CLASS A CONCRETE BREAKDOWN (FOR ONE BENT)

POUR #2 (COLUMNS)	7.6 C.Y.
POUR #3 (CAP)	13.5 C.Y.
TOTAL CLASS A CONCRETE	21.1 C.Y.

DRILLED PIERS: (FOR ONE BENT)

DRILLED PIER CONCRETE POUR #1 (DRILLED PIERS)	19.3 C.Y.
3'-0" Ø DRILLED PIER NOT IN SOIL	33.0 LIN. FT.
3'-0" Ø DRILLED PIER IN SOIL	40.9 LIN. FT.
PERMANENT STEEL CASING FOR 3'-0" Ø DRILLED PIER	22.9 LIN. FT.
CSL TUBES	313.4 LIN. FT.

PROJECT NO. B-4803
ROCKINGHAM COUNTY
STATION: 16+05.00 -L-

SHEET 2 OF 2

STATE OF NORTH CAROLINA
DEPARTMENT OF TRANSPORTATION
RALEIGH

SUBSTRUCTURE
BENT 1

NORTH CAROLINA PROFESSIONAL SEAL 14855 ENGINEER DOUGLAS R. CALLOWAY

DocuSigned by: Douglas R. Calloway
12EFE12F0292440...
11/20/2014

ASSEMBLED BY : ASHVIN PATEL DATE : 06/2013
CHECKED BY : A. SORSENGINH DATE : 07/2013
DRAWN BY : DGE 03/10
CHECKED BY : MKT 03/10

19-NOV-2014 11:31
R:\Structures\Plans\Substructure\B-4803_SD_B*.dgn
asorsenginh

REVISIONS						SHEET NO.
NO.	BY:	DATE:	NO.	BY:	DATE:	S-22
1			3			TOTAL SHEETS
2			4			24

STD. NO. DP_BT_33_90S_<50'