DocuSign Envelope ID: 940AF3A0-F3A6-45EA-B643-19BA5BE0B810

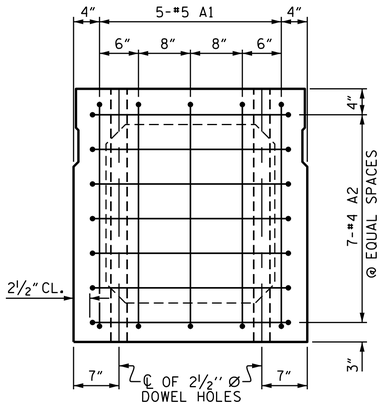

END ELEVATION

SHOWING PLACEMENT OF #5 & #4 "A" BARS AND LOCATION OF DOWEL HOLES.
(INTERIOR BOX BEAM SECTION SHOWN-EXTERIOR SECTION SIMILAR EXCEPT SHEAR KEY LOCATION. STRAND LAYOUT NOT SHOWN.)

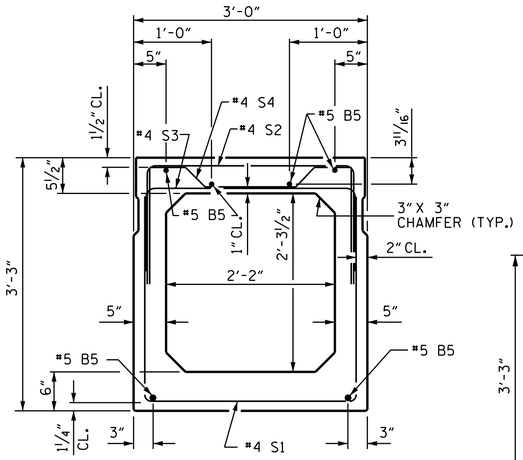

INTERIOR BOX BEAM SECTION

(STRAND LAYOUT NOT SHOWN)

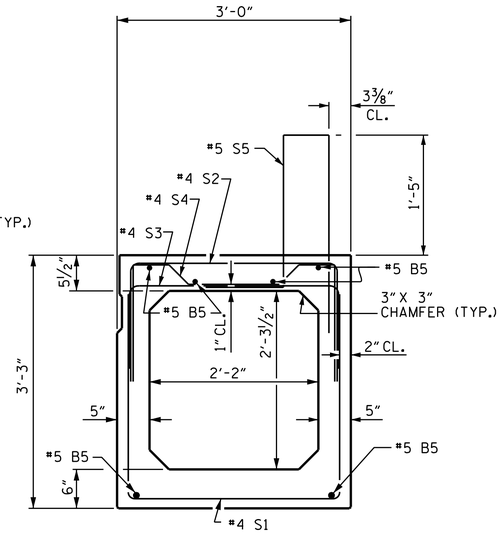

EXTERIOR BOX BEAM SECTION

(STRAND LAYOUT NOT SHOWN)

0.6" Ø LOW RELAXATION STRAND LAYOUT

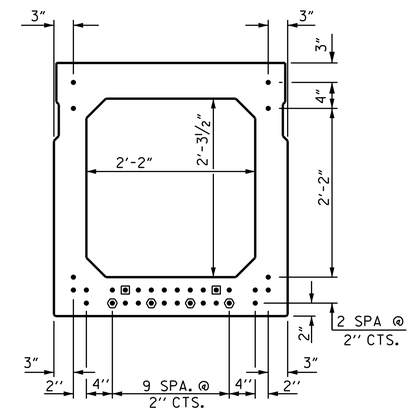

TYPICAL STRAND LOCATION

(32 STRANDS REQUIRED)

DEBONDING LEGEND

- ● FULLY BONDED STRANDS
- ▣ STRANDS DEBONDED FOR 4'-0" FROM END OF GIRDER
- ⬢ STRANDS DEBONDED FOR 12'-0" FROM END OF GIRDER

BOND SHALL BE BROKEN ON STRANDS AS SHOWN FOR THE SPECIFIED LENGTH FROM EACH END OF THE BOX BEAM. SEE STANDARD SPECIFICATIONS ARTICLE 1078-7.

BAR TYPES

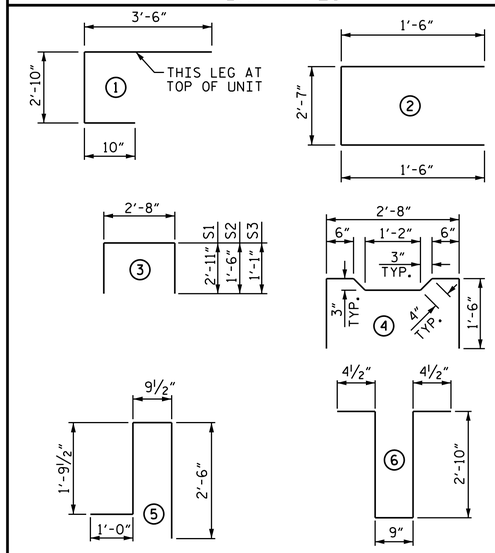

ALL BAR DIMENSIONS ARE OUT TO OUT

BILL OF MATERIAL FOR ONE BOX BEAM SECTION

				EXTERIOR UNIT		INTERIOR UNIT	
BAR	NUMBER	SIZE	TYPE	LENGTH	WEIGHT	LENGTH	WEIGHT
A1	10	#5	1	7'-2"	75	7'-2"	75
A2	44	#4	2	5'-7"	164	5'-7"	164
B5	12	#5	STR	48'-5"	606	48'-5"	606
K1	15	#4	6	7'-2"	72	7'-2"	72
K2	10	#4	STR	2'-7"	17	2'-7"	17
S1	76	#4	3	8'-6"	432	8'-6"	432
S2	76	#4	3	5'-8"	288	5'-8"	288
S3	133	#4	3	4'-10"	429	4'-10"	429
S4	57	#4	4	5'-10"	222	5'-10"	222
* S5	132	#5	5	6'-1"	838	--	--
REINFORCING STEEL				2305	LBS.	2305	LBS.
* EPOXY COATED REINF. STEEL				838	LBS.		
7500 P.S.I. CONCRETE				18.7	CU. YDS.	18.5	CU. YDS.
0.6" Ø L.R. STRANDS				No. 32		No. 32	

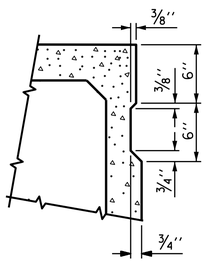

SHEAR KEY DETAIL

NOTE: OMIT SHEAR KEY ON OUTSIDE FACE OF EXTERIOR BOX BEAMS.

GRADE 270 STRANDS	
	0.6" Ø L.R.
AREA (SQUARE INCHES)	0.217
ULTIMATE STRENGTH (LBS. PER STRAND)	58,600
APPLIED PRESTRESS (LBS. PER STRAND)	43,950

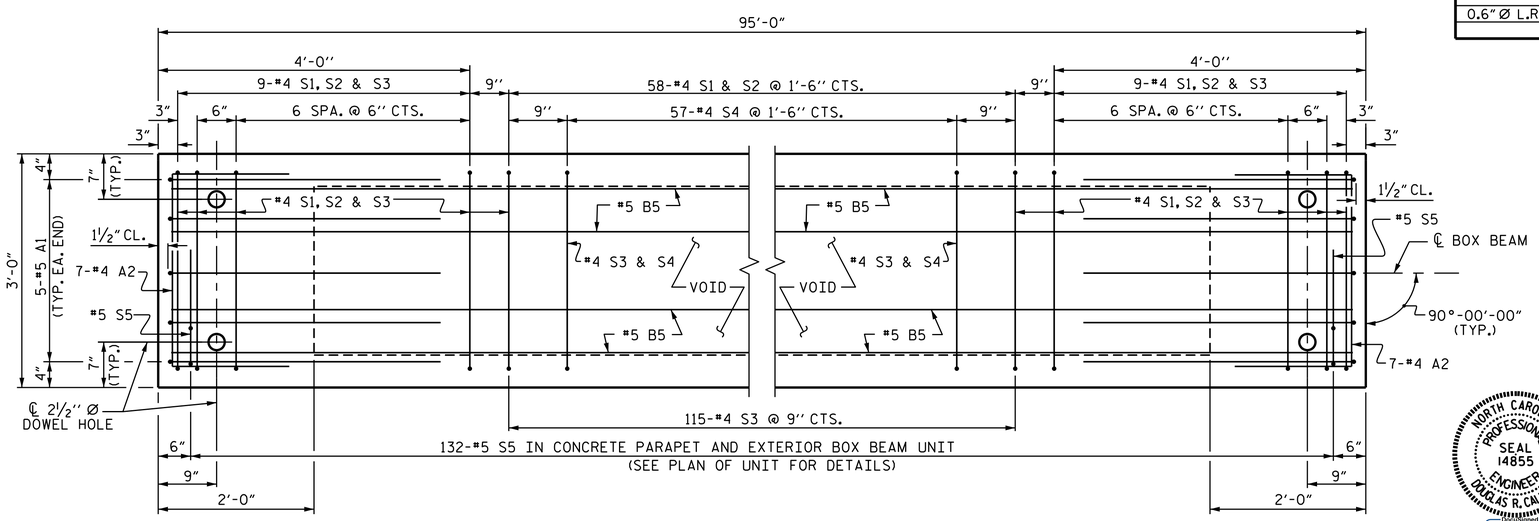

PLAN OF BOX BEAM

EXTERIOR UNIT SHOWN, INTERIOR UNIT SIMILAR EXCEPT OMIT #5 S5 BARS.
FOR LOCATION OF DIAPHRAGMS, SEE PLAN OF UNIT.
FOR REINFORCING STEEL IN DIAPHRAGMS, SEE DIAPHRAGM DETAILS.

NORTH CAROLINA PROFESSIONAL SEAL 14855 ENGINEER DOUGLAS R. CALHOUN

DocuSigned by: Douglas R. Calhoun
12EFE12F0292440...
11/20/2014

PROJECT NO. B-4803
ROCKINGHAM COUNTY
STATION: 16+05.00 -L-

SHEET 5 OF 7

STATE OF NORTH CAROLINA
DEPARTMENT OF TRANSPORTATION
RALEIGH

STANDARD
3'-0" X 3'-3"
PRESTRESSED CONCRETE
BOX BEAM UNIT
SPAN B

REVISIONS						SHEET NO.
NO.	BY:	DATE:	NO.	BY:	DATE:	S-10
1			3			TOTAL SHEETS
2			4			24

ASSEMBLED BY : ASHVIN PATEL DATE : 5-15-13
CHECKED BY : A. SORSENGINH DATE : 7/2013
DRAWN BY : DGE II/II
CHECKED BY : TMG II/II
REV. 8/14 MAA/TMG

19-NOV-2014 11:21
R:\Structures\Plans\Superstructure\B-4803_SD_BX.dgn
asorsenginh

STD. NO. 39PCBB6_90S_95L