DocuSign Envelope ID: 940AF3A0-F3A6-45EA-B643-19BA5BE0B810

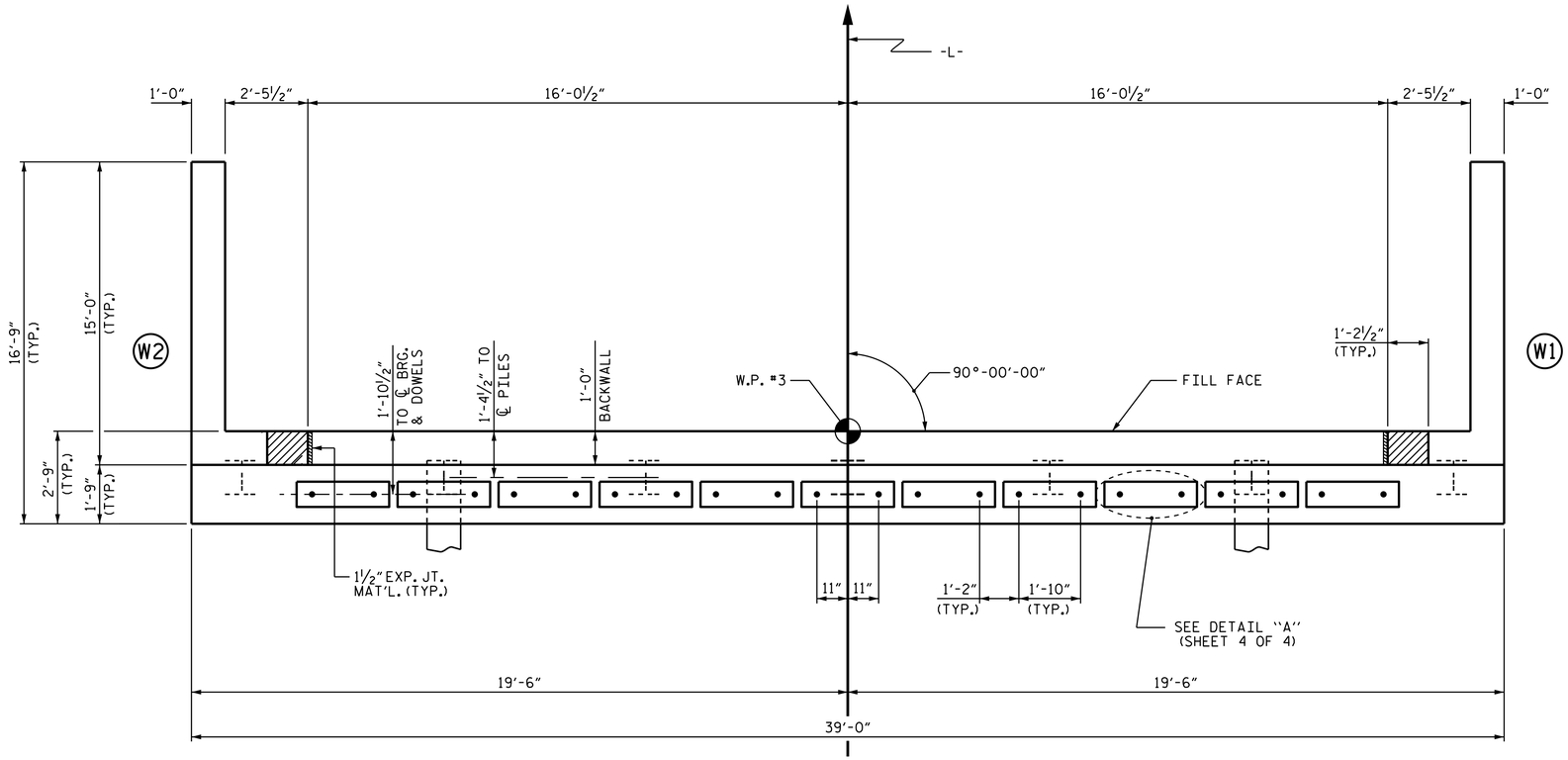

PLAN

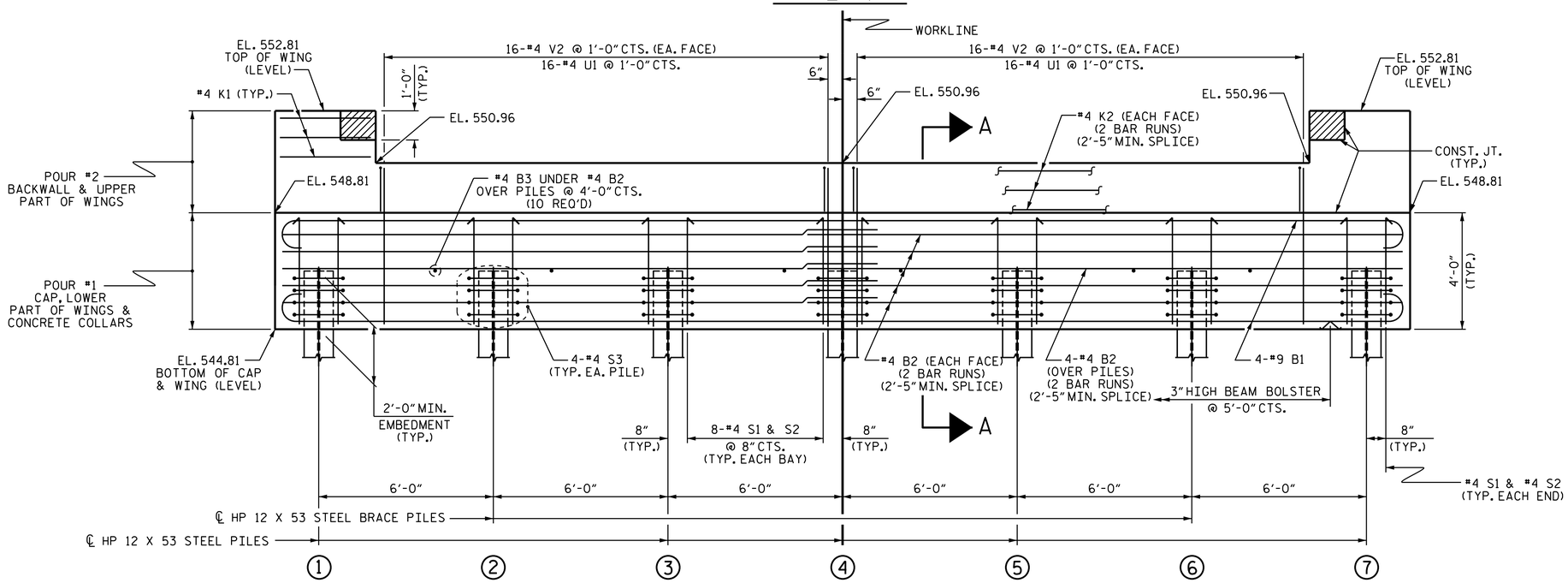

ELEVATION

WINGS NOT SHOWN FOR CLARITY.
FOR SECTION A-A, SEE SHEET 4 OF 4.
CONCRETE COLLARS FOR STEEL PILES NOT SHOWN IN PLAN AND ELEVATION VIEWS FOR CLARITY.
SEE "CORROSION PROTECTION FOR STEEL PILES DETAIL", SHEET 4 OF 4.

NOTES

STIRRUPS IN CAP MAY BE SHIFTED AS NECESSARY TO CLEAR DOWELS.

THE CONCRETE IN THE SHADED AREA OF THE WING SHALL BE POURED AFTER THE CONCRETE PARAPET IS CAST IF SLIP FORMING IS USED.

FOR PILE SPLICE DETAILS, SEE SHEET 4 OF 4.

FOR WING DETAILS, SEE SHEET 3 OF 4.

PROJECT NO. B-4803
ROCKINGHAM COUNTY
STATION: 16+05.00 -L-

SHEET 2 OF 4

STATE OF NORTH CAROLINA
DEPARTMENT OF TRANSPORTATION
RALEIGH

SUBSTRUCTURE

END BENT 2

NORTH CAROLINA PROFESSIONAL SEAL 14855 ENGINEER DOUGLAS R. CALHOUN

DocuSigned by: Douglas R. Calhoun
12EFE12F0292440...
11/20/2014

REVISIONS							
NO.	BY:	DATE:	NO.	BY:	DATE:	SHEET NO. S-18	
1			3			TOTAL SHEETS 24	
2			4				

ASSEMBLED BY : ASHVIN PATEL DATE : 05/2013
CHECKED BY : A. SORSENGINH DATE : 07/2013
DRAWN BY : WJH 12/11
CHECKED BY : AAC 12/11
REV. 8/14 MAA/TMG

19-NOV-2014 11:28
R:\Structures\Plans\Substructure\B-4803_SD_E*.dgn
asorsenginh

STD. NO. EB_33_90S4_39BB