DocuSign Envelope ID: 43467A26-D9CD-406C-A40D-9CBBA3C28539

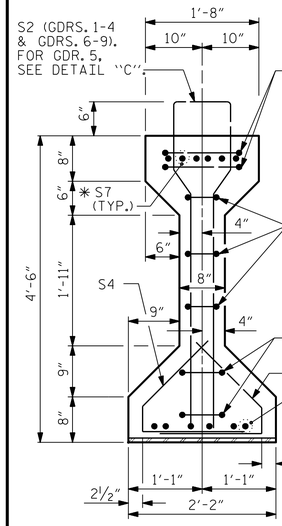

SECTION A-A

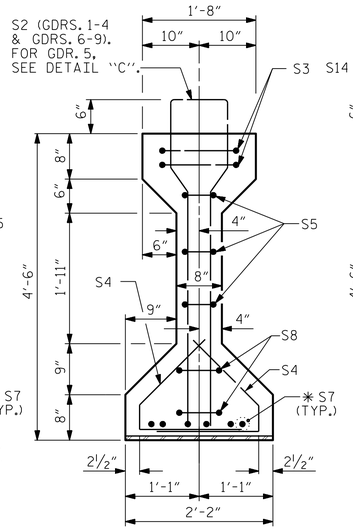

SECTION B-B

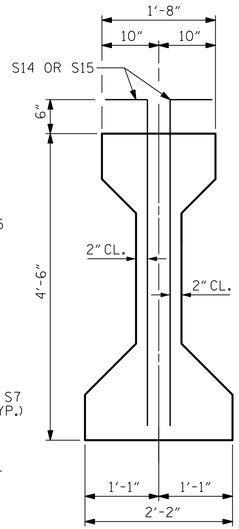

DETAIL "C"

(GIRDER 5 ONLY)

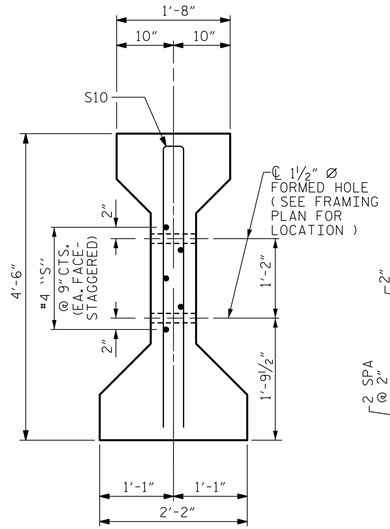

SECTION C-C

(S1 BARS NOT SHOWN)

✳ FOR S7 BARS, SEE DETAILS "A" AND "B" OF "PRESTRESSED CONCRETE GIRDER CONTINUOUS FOR LIVE LOAD DETAILS" SHEET

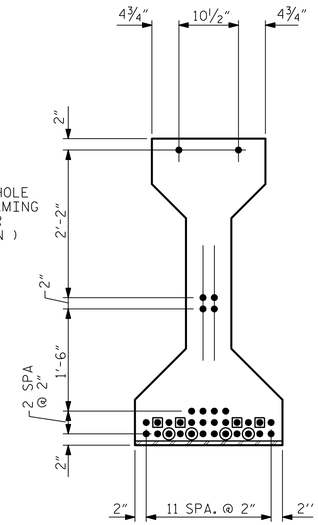

AT END OF GIRDER

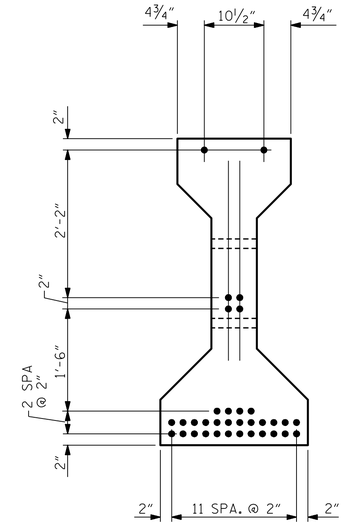

AT ℄ OF GIRDER

0.6" Ø LOW RELAXATION STRAND LAYOUT

0.6" Ø L. R. GRADE 270 STRANDS		
AREA (SQUARE INCHES)	ULTIMATE STRENGTH (LBS. PER STRAND)	APPLIED PRESTRESS (LBS. PER STRAND)
0.217	58,600	43,950

REINFORCING STEEL FOR ONE GIRDER

	BAR	NUMBER	SIZE	TYPE	LENGTH	WEIGHT
GDRS. 1-3	S1	94	#4	1	10'-8"	670
GDRS. 4 & 6	S1	95	#4	1	10'-8"	677
GDRS. 7-9	S1	96	#4	1	10'-8"	684
GDRS. 1-4 & 6-9	S2	16	#6	1	10'-8"	256
	S2	32	#6	4	5'-5"	260
	S3	4	#4	2	9'-1"	24
	S4	140	#4	3	3'-5"	320
	S5	6	#4	2	8'-5"	34
	✳ S7	18	#5	STR	3'-8"	69
	S8	4	#4	2	8'-7"	23
	S9	2	#3	STR	1'-10"	2
	S10	2	#5	2	8'-8"	18
	S11	5	#4	STR	7'-0"	23
	S13	1	#3	STR	1'-4"	1
GDR. 5	S14	190	#4	4	5'-5"	687
GDR. 5	S15	32	#6	4	5'-5"	260

✳ NOTE: S7 BARS SHALL BE BENT BEFORE SHIPMENT. HEAT BENDING SHALL NOT BE ALLOWED.

BAR TYPES

ALL BAR DIMENSIONS ARE OUT-TO-OUT

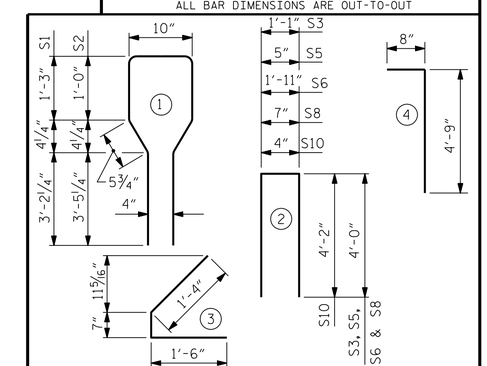

NOTE: FOR DIMENSIONS A, B, C, D AND TOTAL BILL OF MATERIAL QUANTITIES, SEE SHEET 3 OF 5.

DEBONDING LEGEND

- ● FULLY BONDED STRAND
- ▣ STRANDS DEBONDED FOR 4'-0" FROM END OF GIRDER
- ◉ STRANDS DEBONDED FOR 8'-0" FROM END OF GIRDER

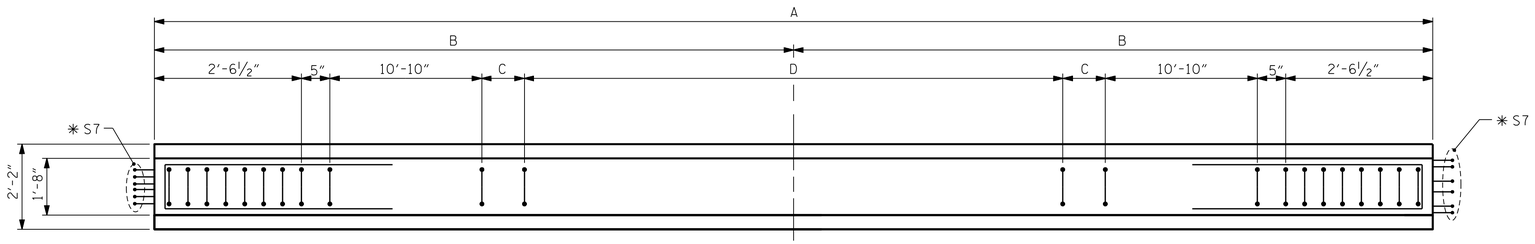

PLAN OF GIRDER

(GIRDER 1-4 & 6-9 SHOWN, GIRDER 5 SIMILAR)

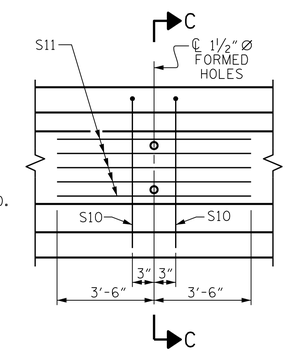

PARTIAL ELEVATION

SHOWING INTERMEDIATE DIAPHRAGM REINFORCING STEEL

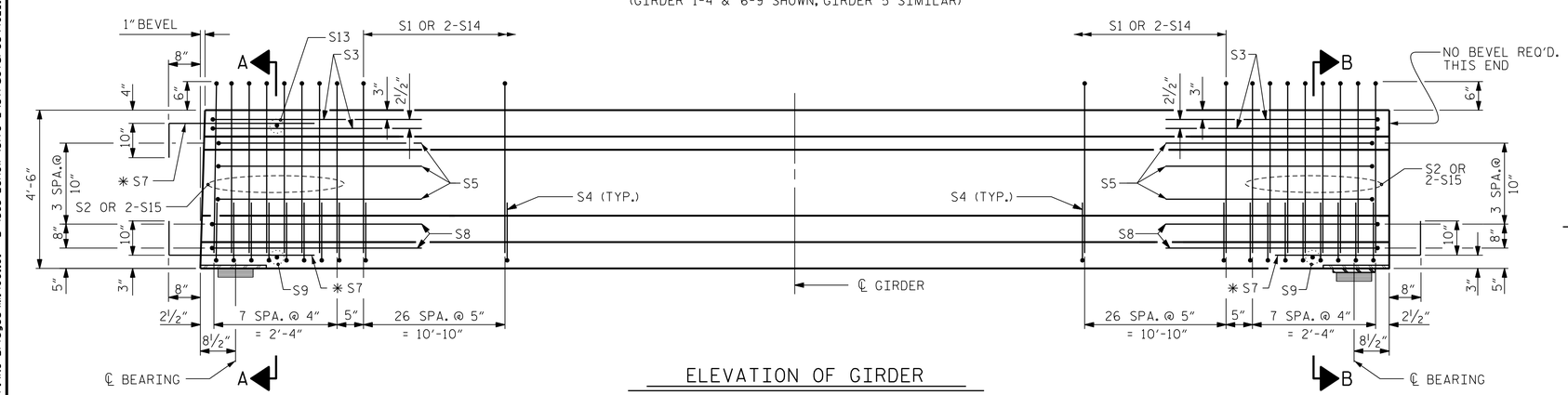

INTEGRAL END BENT

ELEVATION OF GIRDER

(SEE PARTIAL ELEVATION FOR ADDITIONAL "S" BARS)

FIX

QUANTITIES FOR ONE GIRDER

	REINFORCING STEEL	7500 PSI CONCRETE	0.6" Ø L.R. STRANDS
	LB.	C.Y.	No.
SEE BILL OF MATERIALS CHART, SHEET 3 OF 5.			

GIRDERS REQUIRED

NUMBER	LENGTH	TOTAL LENGTH
SEE BILL OF MATERIALS CHART, SHEET 3 OF 5.		

PROJECT NO. B-4565

LENOIR COUNTY

STATION: 29+57.00 -L-

SHEET 1 OF 5

STATE OF NORTH CAROLINA
DEPARTMENT OF TRANSPORTATION
RALEIGH

STANDARD

AASHTO TYPE IV
PRESTRESSED CONCRETE GIRDER
CONTINUOUS FOR LIVE LOAD

SPANS A & C

NORTH CAROLINA PROFESSIONAL SEAL 041543 ENGINEER GREGORY R. COLS
11/13/2014

MI ENGINEERING
1011 SCHAUB DRIVE, SUITE 100
RALEIGH, NC 27606
(919) 851-6606
FIRM PE NUMBER : P-0671

REVISIONS							SHEET NO.
NO.	BY:	DATE:	NO.	BY:	DATE:		S-83
1			3				TOTAL SHEETS
2			4				118

ASSEMBLED BY:	B.E. ATKINSON	DATE:	07/14
CHECKED BY :	G.R. COLS	DATE:	07/14
DESIGN ENGINEER OF RECORD:	G.R. COLS	DATE:	10/14
DRAWN BY : ELR 8/91	REV. 10/17/00R RWW/LES		
CHECKED BY : VAP 8/91	REV. 5/1/06RR TLA/GM		
	REV. 10/1/11 MAA/GM		

STD. NO. PCG6

11/13/2014
1:14:42 PM
User: blanning
Filename: P:\NC Bridges\M14001.01 - B-4565 Lenoir\Site 2\Structures\402_115_S02_B4565_SMU_PCG01.dgn