DocuSign Envelope ID: 43467A26-D9CD-406C-A40D-9CBBA3C28539

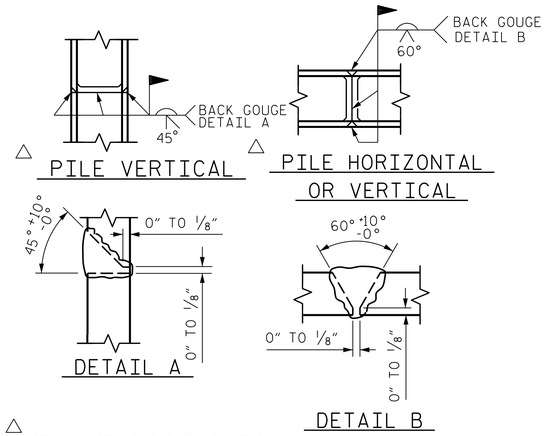

△ POSITION OF PILE DURING WELDING.

PILE SPLICE DETAILS

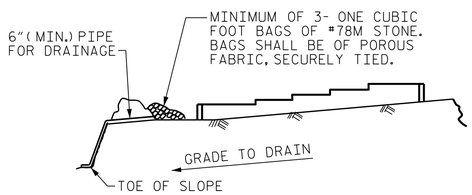

BAGGED STONE AND PIPE SHALL BE PLACED IMMEDIATELY AFTER COMPLETION OF END BENT EXCAVATION. PIPE MAY BE EITHER CONCRETE, CORRUGATED STEEL, CORRUGATED ALUMINUM ALLOY, OR CORRUGATED PLASTIC. PERFORATED PIPE WILL NOT BE ALLOWED.

BAGGED STONE SHALL REMAIN IN PLACE UNTIL THE ENGINEER DIRECTS THAT IT BE REMOVED. THE CONTRACTOR SHALL REMOVE AND DISPOSE OF SILT ACCUMULATIONS AT BAGGED STONE WHEN SO DIRECTED BY THE ENGINEER. BAGS SHALL BE REMOVED AND REPLACED WHENEVER THE ENGINEER DETERMINES THAT THEY HAVE DETERIORATED AND LOST THEIR EFFECTIVENESS.

NO SEPARATE PAYMENT WILL BE MADE FOR THIS WORK AND THE ENTIRE COST OF THIS WORK SHALL BE INCLUDED IN THE UNIT CONTRACT PRICE BID FOR THE SEVERAL PAY ITEMS.

TEMPORARY DRAINAGE AT END BENT

BAR TYPES

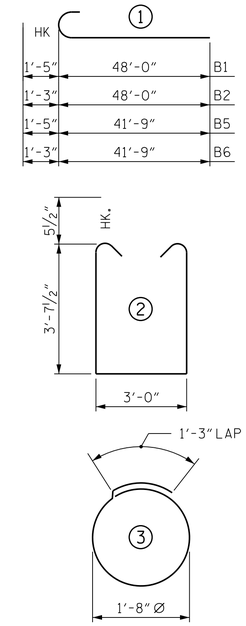

ALL BAR DIMENSIONS ARE OUT TO OUT.

BILL OF MATERIAL

END BENT 1

STAGE I

BAR	NO.	SIZE	TYPE	LENGTH	WEIGHT
B1	4	#10	1	49'-5"	851
B2	5	#9	1	49'-3"	837
B3	10	#5	STR	50'-2"	523
B4	12	#4	STR	3'-0"	24
H1	16	#6	STR	15'-8"	377
S1	86	#5	2	11'-2"	1002
S2	36	#4	3	6'-6"	156
V1	76	#4	STR	5'-10"	296
V2	30	#4	STR	9'-6"	190

REINFORCING STEEL 4256 LBS.

CLASS A CONCRETE
(CAP, LOWER WINGS & COLLARS 27.5 C.Y.

HP 12 x 53 STEEL PILES
NO. 9 450 LIN. FT.

STAGE II

BAR	NO.	SIZE	TYPE	LENGTH	WEIGHT
B4	11	#4	STR	3'-0"	22
B5	4	#10	1	43'-2"	743
B6	5	#9	1	43'-0"	731
B7	10	#5	STR	42'-7"	444
H1	16	#6	STR	15'-8"	377
S1	78	#5	2	11'-2"	908
S2	32	#4	3	6'-6"	139
V1	70	#4	STR	5'-10"	273
V3	30	#4	STR	9'-4"	187

REINFORCING STEEL 3824 LBS.

CLASS A CONCRETE
(CAP, LOWER WINGS & COLLARS 25.1 C.Y.

HP 12 x 53 STEEL PILES
NO. 8 400 LIN. FT.

TOTAL QUANTITIES

REINFORCING STEEL		8080 LBS.
CLASS A CONCRETE		52.6 C.Y.
HP 12 X 53 STEEL PILES	NO. 17	850 LIN. FT.
PILE REDRIVES		6

PROJECT NO. B-4565
LENOIR COUNTY
STATION: 29+57.00 -L-

SHEET 4 OF 4

STATE OF NORTH CAROLINA
DEPARTMENT OF TRANSPORTATION
RALEIGH

SUBSTRUCTURE

INTEGRAL
END BENT 1

NORTH CAROLINA PROFESSIONAL SEAL 041343 ENGINEER GREGORY R. COLS
11/13/2014

MI ENGINEERING
1011 SCHAUB DRIVE, SUITE 100
RALEIGH, NC 27606
(919) 851-6606
FIRM PE NUMBER : P-0671

REVISIONS						
NO.	BY:	DATE:	NO.	BY:	DATE:	
1			3			
2			4			

SHEET NO. S-101
TOTAL SHEETS 118

DRAWN BY :	B.E. LANNING	DATE :	09/14
CHECKED BY :	G.R. COLS	DATE :	09/14
DESIGN ENGINEER OF RECORD :	G.R. COLS	DATE :	10/14

11/13/2014
1:15:18 PM
User: blanning
Filename: P:\NC Bridges\MI4001.01 - B-4565 Lenoir\Site 2\Structures\402.200.S02.B4565_SMU_E104.dgn