DocuSign Envelope ID: 43467A26-D9CD-406C-A40D-9CBBA3C28539

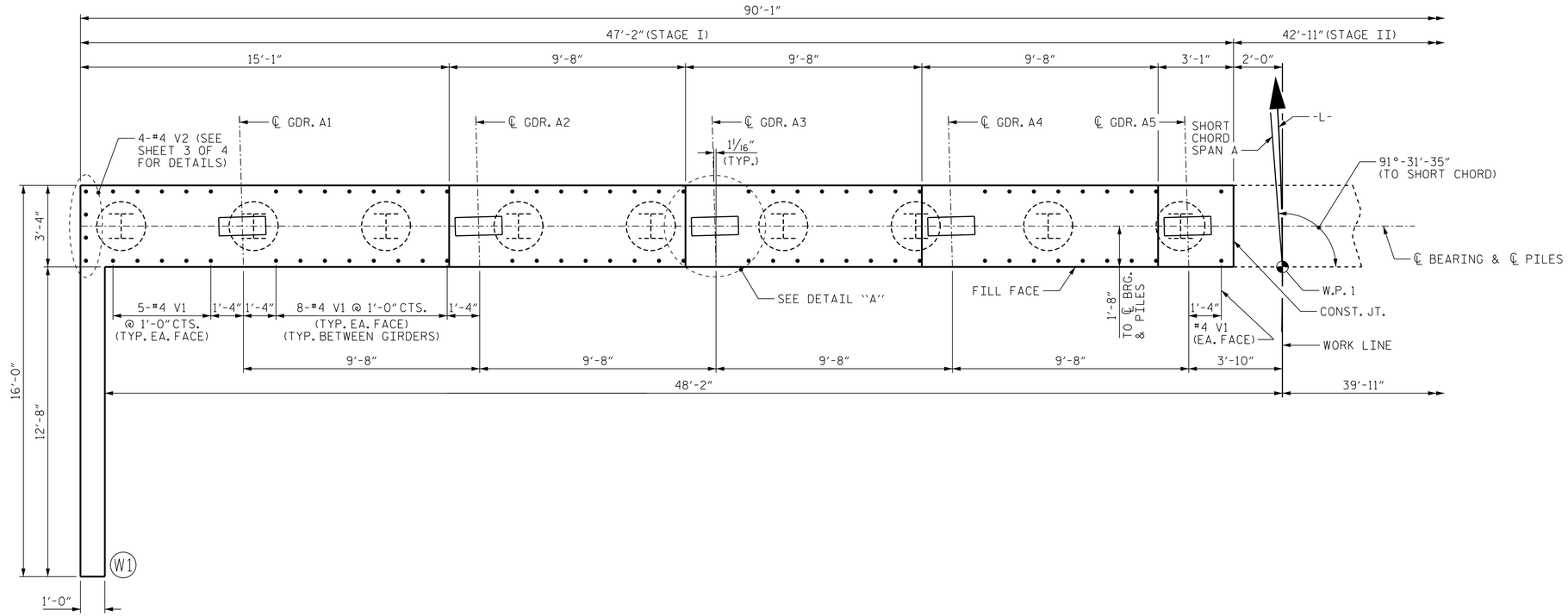

PLAN

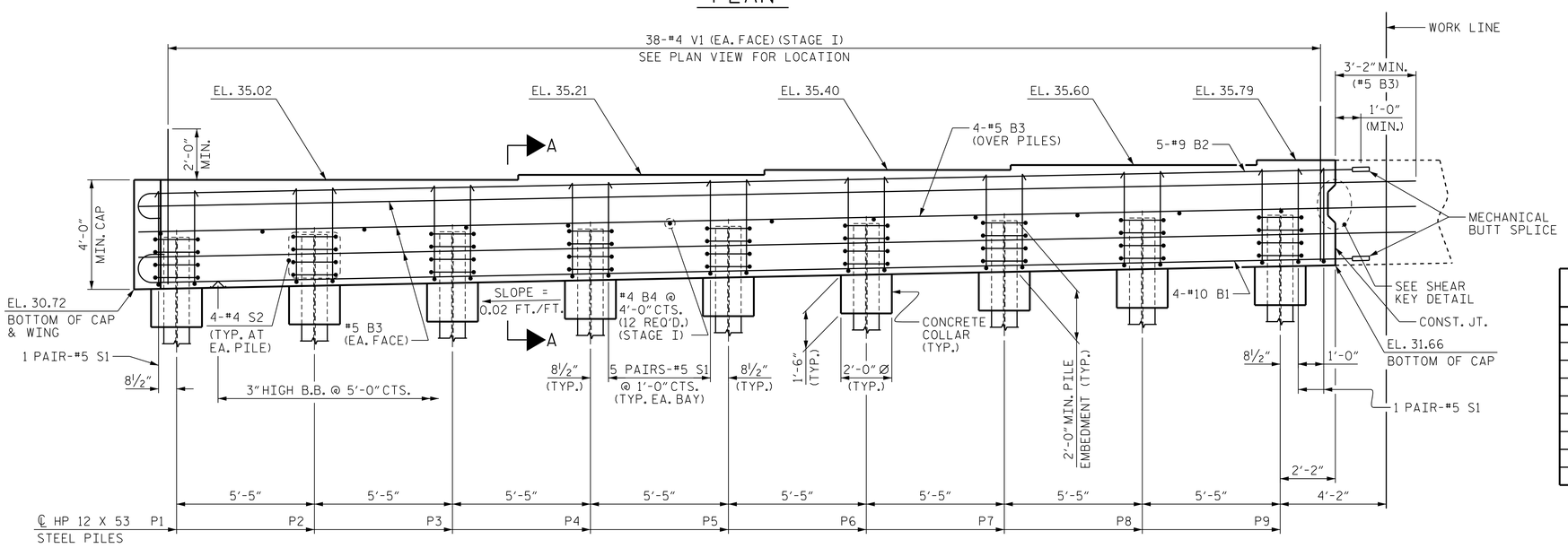

ELEVATION

NOTES

SEE SUPERSTRUCTURE SHEETS FOR UPPER PART OF INTEGRAL END BENT DETAILS.

THE TOP SURFACE OF THE END BENT CAP AND WINGS, EXCEPT THE BEARING AREA, SHALL BE RAKED TO A DEPTH OF 1/4".

FOR SECTION A-A, SEE SHEET 2 OF 4.

FOR PILE SPLICE DETAILS AND TEMPORARY DRAINAGE DETAILS, SEE SHEET 4 OF 4.

INSTALL THE 4" DIA. DRAIN PIPE THROUGH THE WING WALL AS REQUIRED FOR REINFORCED BRIDGE APPROACH FILLS. SEE THE ROADWAY PLANS. REINFORCING STEEL IN THE WING WALL MAY BE SHIFTED AS NECESSARY TO CLEAR THE DRAIN PIPE.

THE CONTRACTOR'S ATTENTION IS CALLED TO THE FACT THAT THE UPPER PART OF THE END BENT WINGS ARE TO BE POURED WITH POUR #4 OF THE SUPERSTRUCTURE.

LONGITUDINAL STEEL SHALL BE CONTINUOUS THROUGH JOINT.

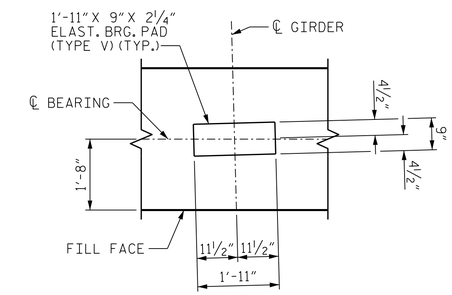

DETAIL "A"
(TYP. AT EACH BEARING)

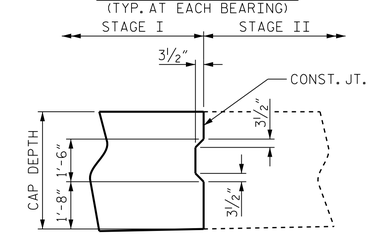

SHEAR KEY DETAIL

TOP OF PILE ELEVATIONS	
PILE	ELEVATION
P1	32.76
P2	32.87
P3	32.98
P4	33.09
P5	33.19
P6	33.30
P7	33.41
P8	33.52
P9	33.63

PROJECT NO. B-4565
LENOIR COUNTY
STATION: 29+57.00 -L-

SHEET 1 OF 4

STATE OF NORTH CAROLINA
DEPARTMENT OF TRANSPORTATION
RALEIGH

SUBSTRUCTURE

INTEGRAL END BENT 1 STAGE I

NORTH CAROLINA PROFESSIONAL SEAL 041343 ENGINEER GREGORY R. COLS
11/13/2014

MI ENGINEERING
1011 SCHAUB DRIVE, SUITE 100
RALEIGH, NC 27606
(919) 851-6606
FIRM PE NUMBER : P-0671

REVISIONS							SHEET NO.
NO.	BY:	DATE:	NO.	BY:	DATE:		S-98
1			3				TOTAL SHEETS
2			4				118

DRAWN BY :	B.E. LANNING	DATE :	09/14
CHECKED BY :	G.R. COLS	DATE :	09/14
DESIGN ENGINEER OF RECORD :	G.R. COLS	DATE :	10/14

11/13/2014
11:15:12 PM
User: blanning
Filename: P:\NC Bridges\MI4001.01 - B-4565 Lenoir\Site 2\Structures\402.185.S02.B4565.SMU.E101.dgn