DocuSign Envelope ID: 43467A26-D9CD-406C-A40D-9CBBA3C28539

NOTES

FOR DETAIL "A" AND SHEAR KEY DETAIL, SEE SHEET 1 OF 4.

FOR ADDITIONAL NOTES, SEE SHEET 1 OF 4.

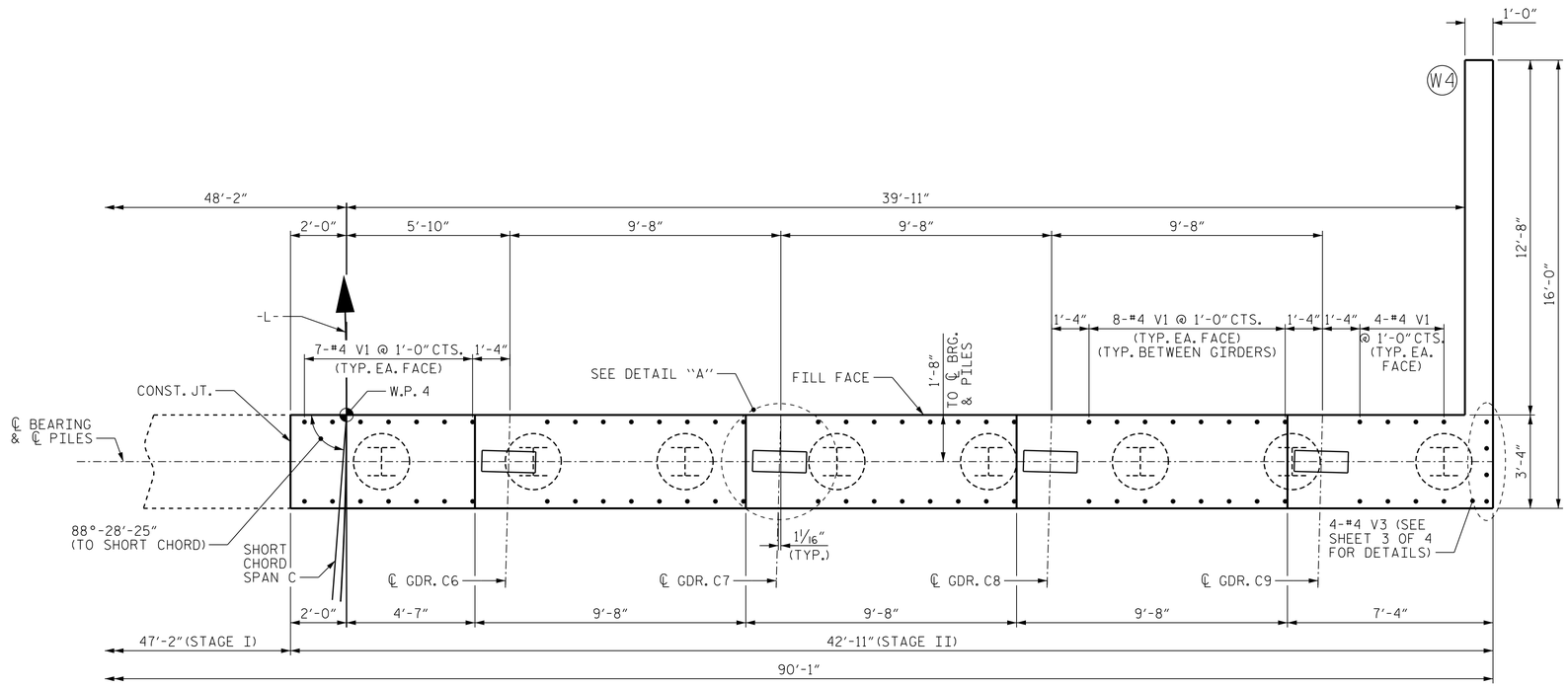

PLAN

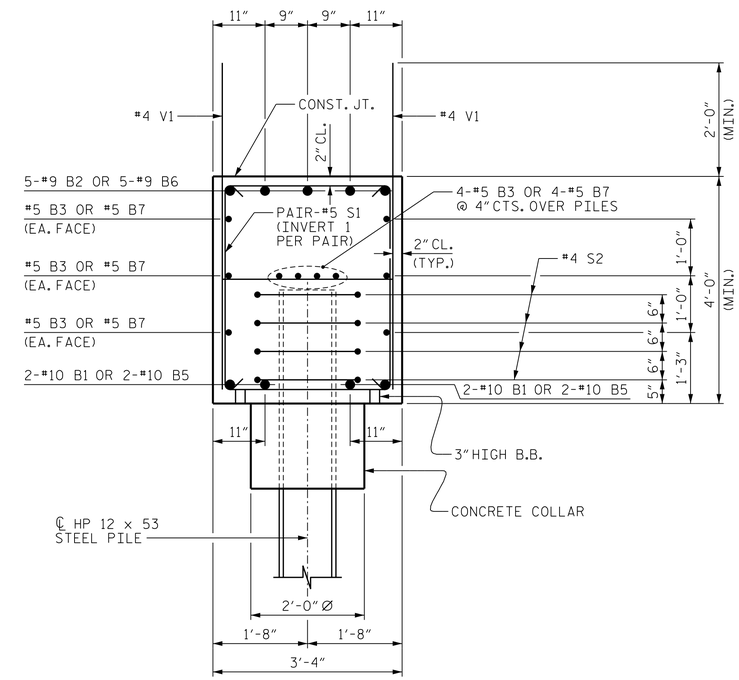

SECTION A-A

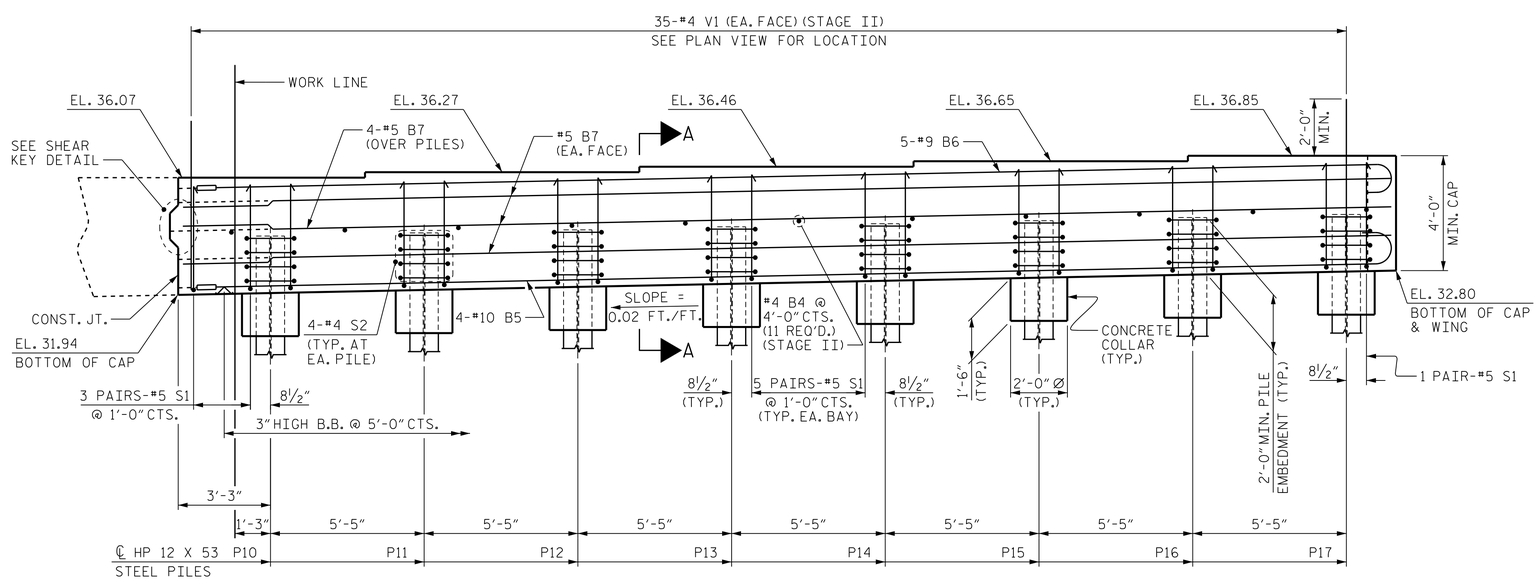

ELEVATION

TOP OF PILE ELEVATIONS	
PILE	ELEVATION
P10	34.02
P11	34.13
P12	34.23
P13	34.34
P14	34.45
P15	34.56
P16	34.67
P17	34.78

PROJECT NO. B-4565

LENOIR COUNTY

STATION: 29+57.00 -L-

SHEET 2 OF 4

NORTH CAROLINA PROFESSIONAL SEAL 041343 ENGINEER GREGORY R. COLS

11/13/2014

STATE OF NORTH CAROLINA
DEPARTMENT OF TRANSPORTATION
RALEIGH

SUBSTRUCTURE

INTEGRAL END BENT 2 STAGE II

MI ENGINEERING
1011 SCHAUB DRIVE, SUITE 100
RALEIGH, NC 27606
(919) 851-6606
FIRM PE NUMBER : P-0671

REVISIONS						
NO.	BY:	DATE:	NO.	BY:	DATE:	
1			3			
2			4			

SHEET NO. S-109

TOTAL SHEETS 118

DRAWN BY :	B.E. LANNING	DATE :	09/14
CHECKED BY :	G.R. COLS	DATE :	09/14
DESIGN ENGINEER OF RECORD :	G.R. COLS	DATE :	10/14

11/13/2014
1:15:35 PM
User: blanning
Filename: P:\NC Bridges\MI4001.01 - B-4565 Lenoir\Site 2\Structures\402.240.S02.B4565.SMU.E202.dgn