DocuSign Envelope ID: 43467A26-D9CD-406C-A40D-9CBBA3C28539

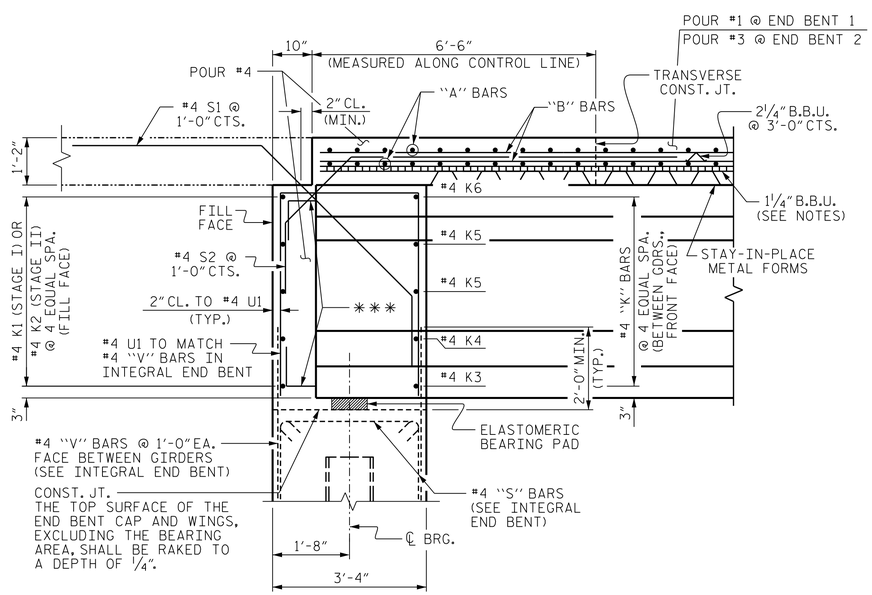

END OF GIRDER DETAIL AT INTEGRAL END BENT

(END BENT 1 SHOWN, END BENT 2 SIMILAR)

✱✱✱ #5 "S" BARS (TYP.) (SEE GIRDER SHEETS)

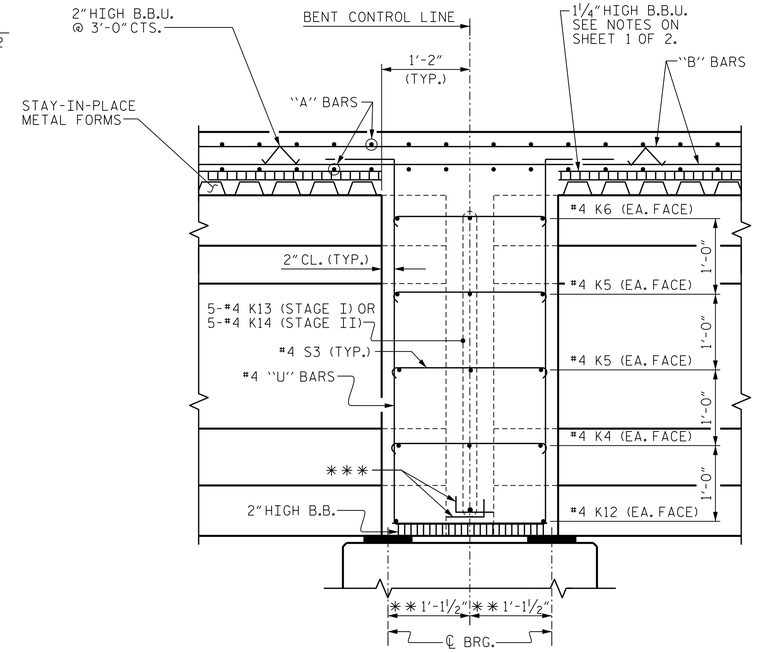

SECTION A-A

✱✱ MEASURED ALONG ℄ GIRDER

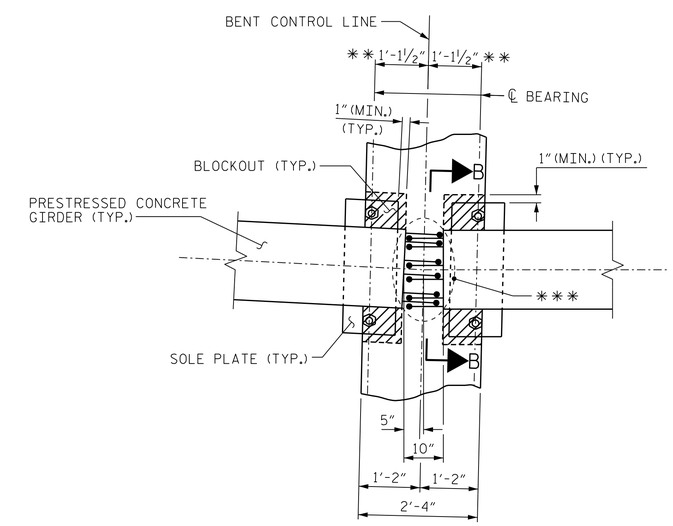

PLAN

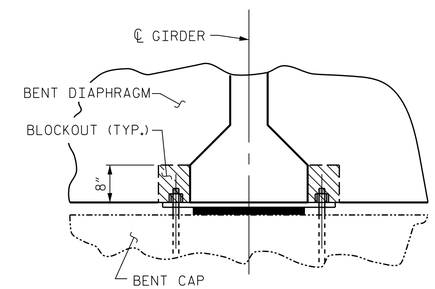

SECTION B-B

BENT DIAPHRAGM BLOCK-OUT DETAIL

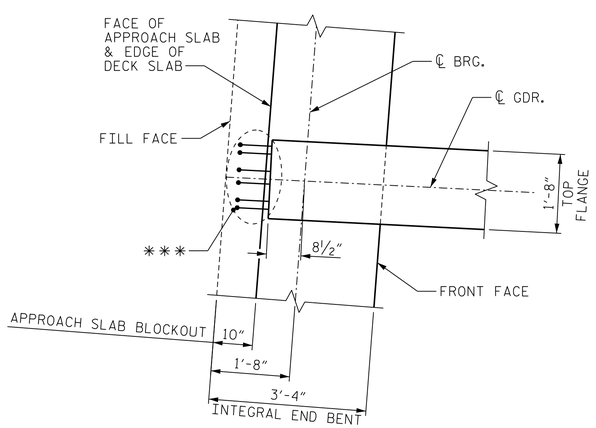

PLAN OF GIRDER AT INTEGRAL END BENT

(END BENT 1 SHOWN, END BENT 2 SIMILAR)

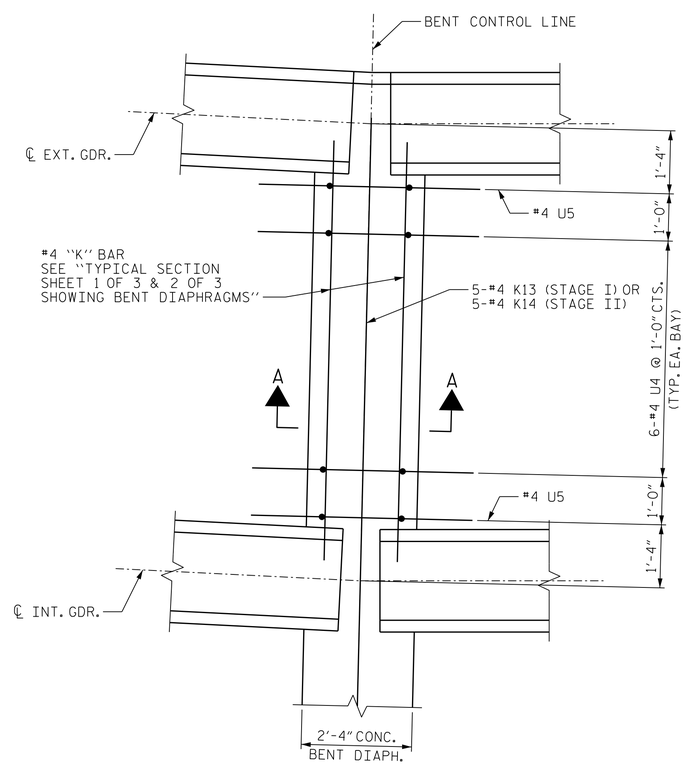

PLAN OF BENT DIAPHRAGM

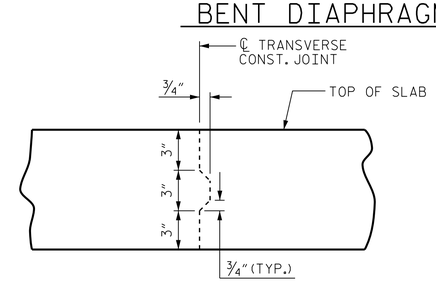

TRANSVERSE CONSTRUCTION JOINT DETAIL

NOTE: REINFORCING STEEL IN SLAB NOT SHOWN. LONGITUDINAL REINFORCING STEEL SHALL BE CONTINUOUS THRU JOINT.

NORTH CAROLINA PROFESSIONAL SEAL 041343 ENGINEER GREGORY R. COLS
11/13/2014

PROJECT NO. B-4565
LENOIR COUNTY
STATION: 29+57.00 -L-

SHEET 3 OF 3

STATE OF NORTH CAROLINA
DEPARTMENT OF TRANSPORTATION
RALEIGH

SUPERSTRUCTURE

TYPICAL SECTION DETAILS

MI ENGINEERING
1011 SCHAUB DRIVE, SUITE 100
RALEIGH, NC 27606
(919) 851-6606
FIRM PE NUMBER : P-0671

REVISIONS								SHEET NO.
NO.	BY:	DATE:	NO.	BY:	DATE:			S-69
1			3					TOTAL SHEETS
2			4					118

DRAWN BY :	B.E. LANNING	DATE :	08/14
CHECKED BY :	G.R. COLS	DATE :	08/14
DESIGN ENGINEER OF RECORD :	G.R. COLS	DATE :	10/14

11/13/2014
1:14:13 PM
User: blanning
Filename: P:\NC Bridges\MI4001.01 - B-4565 Lenoir\Site 2\Structures\402.045_S02_B4565_SMU_TS03.dgn