DocuSign Envelope ID: 43467A26-D9CD-406C-A40D-9CBBA3C28539

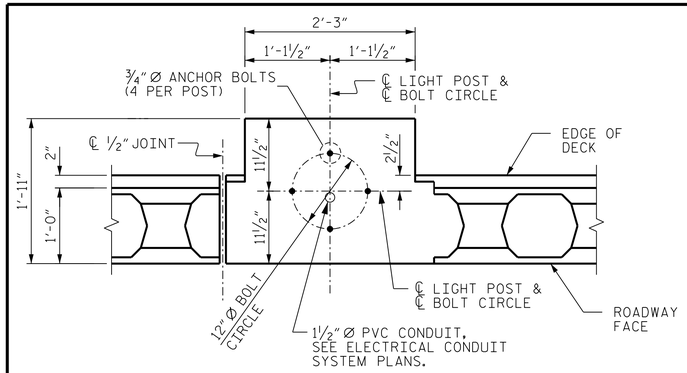

LIGHT POST FOUNDATION

REINFORCING STEEL NOT SHOWN FOR CLARITY.
LIGHT POSTS BY OTHERS.

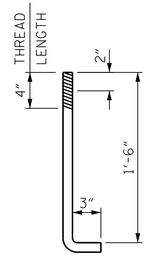

ANCHOR BOLT DETAIL

4 ANCHOR BOLTS, NUTS & WASHERS PER LIGHT POST

① 8¾" LEFT SIDE
6" RIGHT SIDE

② 1'-3½" LEFT SIDE
1'-1" RIGHT SIDE

✱ SEE DETAIL

LIGHT POST FOUNDATION NOTES

1. PROVIDE AND SET ANCHOR BOLTS FOR LIGHT POSTS AS SHOWN ON THE PLANS.
2. ANCHOR BOLTS SHALL CONFORM TO AASHTO M314 OR ASTM F1554 GRADE 55. NUTS AND WASHERS SHALL CONFORM TO AASHTO M314-90 OR ASTM F1554. ANCHOR BOLTS, NUTS AND WASHERS SHALL BE GALVANIZED IN ACCORDANCE WITH ASTM A153. SHOP DRAWINGS ARE REQUIRED. SHOP INSPECTION IS NOT REQUIRED.
3. PROVIDE A CLASS I SURFACE FINISH FOR ALL EXPOSED SURFACES.
4. PROVIDE AND SET ANCHOR BOLTS FOR LIGHT POSTS AS SHOWN ON THE PLANS.
5. PROVIDING AND INSTALLING LIGHT POSTS IS BY OTHERS AND NOT PART OF THIS WORK. BEFORE ORDERING AND INSTALLING ANCHOR BOLTS, THE CONTRACTOR SHALL COORDINATE WITH THE CITY OF KINSTON FOR CONSISTENCY OR CHANGES TO THE CITY'S PREFERRED LIGHT POST. THESE PLANS ARE PREPARED USING A HOLOPHANE NORTH YORKSHIRE LAMP POST WITH A 17" BASE DIAMETER AND A 12" DIAMETER BOLT CIRCLE.
6. ANCHOR BOLTS SHALL CONFORM TO AASHTO M314 OR ASTM F1554 GRADE 55. NUTS AND WASHERS SHALL CONFORM TO AASHTO M314-90 OR ASTM F1554. ANCHOR BOLTS, NUTS AND WASHERS SHALL BE GALVANIZED IN ACCORDANCE WITH ASTM A153. SHOP DRAWINGS ARE REQUIRED. SHOP INSPECTION IS NOT REQUIRED.
7. PLACE ANCHOR BOLTS IN ACCORDANCE WITH THE STANDARD SPECIFICATIONS. BEFORE CASTING CONCRETE, TURN NUT TO BOTTOM OF THREADS AND PLACE WASHER ON TOP OF NUT. SECURE WASHER WITH TACK WELD BETWEEN WASHER AND NUT. EMBED NUT AND WASHER IN CONCRETE.

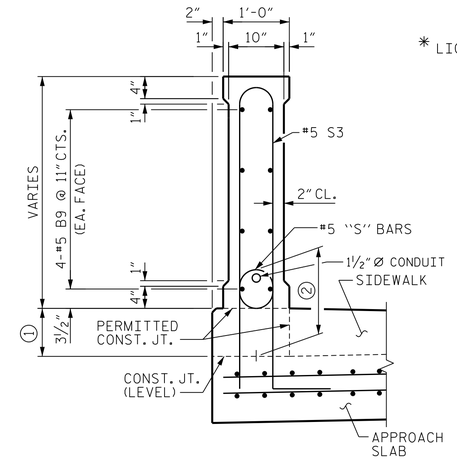

SECTION C-C

(SHOWING END POST ON APPROACH SLAB)

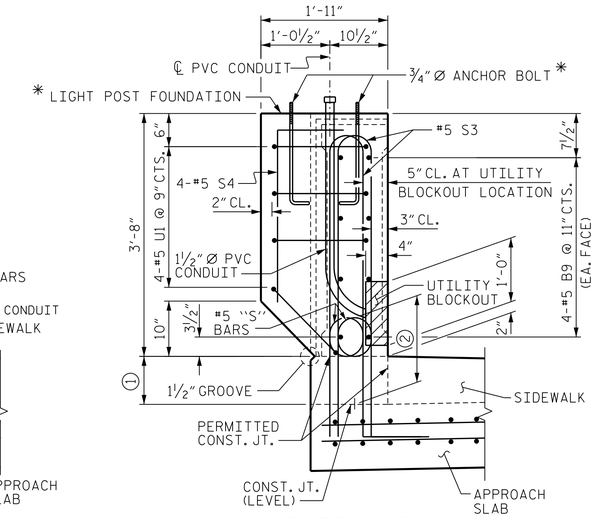

SECTION D-D

(SHOWING LIGHT PILASTER ON APPROACH SLAB)

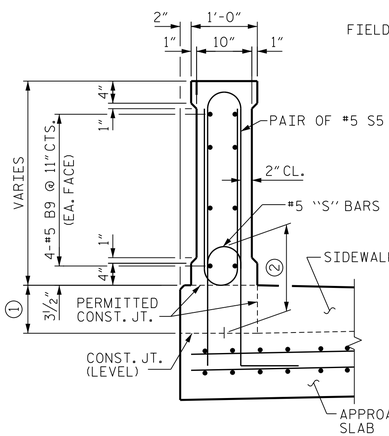

END VIEW

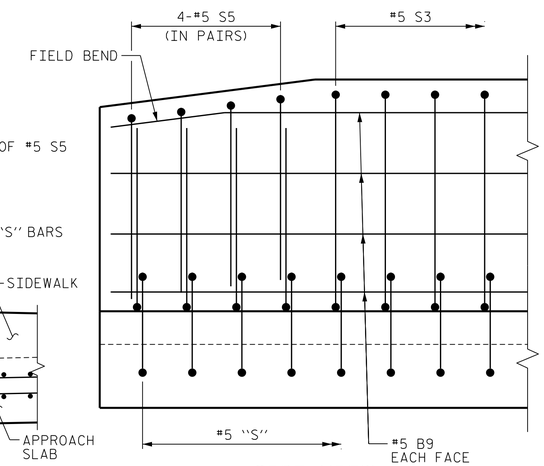

SIDE VIEW

END OF RAIL DETAIL

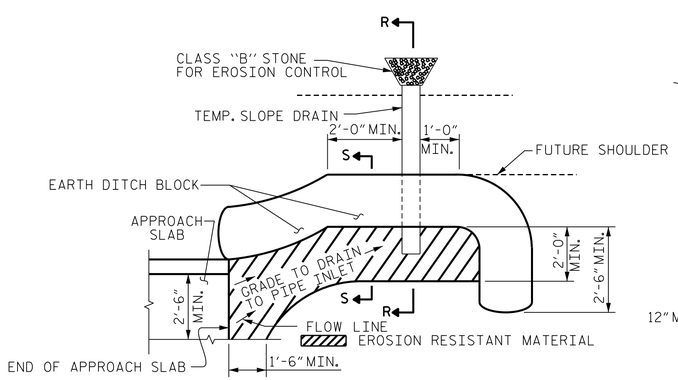

NOTE: IMMEDIATELY AFTER THE CONSTRUCTION OF THE APPROACH SLAB, THE CONTRACTOR SHALL PROVIDE TEMPORARY BERM AND SLOPE DRAIN. CONTRACTOR SHALL GRADE TO PIPE INLET AND PROVIDE EROSION RESISTANT MATERIAL AS SHOWN. THE EROSION RESISTANT MATERIAL SHALL BE EITHER 1) ASPHALT PLANT MIX, TYPE 1 OR TYPE 2, MIN. 2" DEPTH, 2) EROSION CONTROL MAT, OR 3) CONCRETE, AS DIRECTED BY THE ENGINEER. THE SLOPE DRAIN SHALL CONSIST OF A NON-PERFORATED TEMPORARY DRAINAGE PIPE, 12 INCHES IN DIAMETER.

PLAN VIEW

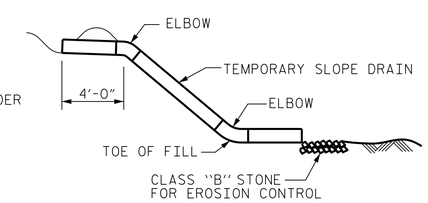

SECTION R-R

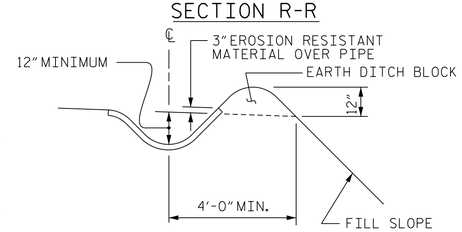

SECTION S-S

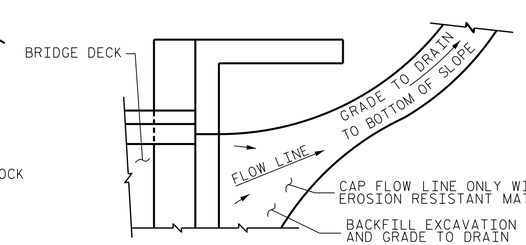

NOTE: IF THE APPROACH SLAB IS NOT CONSTRUCTED IMMEDIATELY AFTER THE BACKFILLING OF THE END BENT EXCAVATION, GRADE TO DRAIN TO THE BOTTOM OF THE SLOPE AND PROVIDE EROSION RESISTANT MATERIAL, SUCH AS FIBERGLASS ROVING OR AS DIRECTED BY THE ENGINEER TO PREVENT SOIL EROSION AND TO PROTECT THE AREA ADJACENT TO THE STRUCTURE. THE CONTRACTOR WILL BE REQUIRED TO REMOVE THESE MATERIALS PRIOR TO CONSTRUCTION OF THE APPROACH SLAB.

TEMPORARY DRAINAGE DETAIL

TEMPORARY BERM AND SLOPE DRAIN DETAILS

(TO BE USED WHEN SHOULDER BERM GUTTER IS REQUIRED)

PROJECT NO. B-4565
LENOIR COUNTY
STATION: 29+57.00 -L-

SHEET 4 OF 4

STATE OF NORTH CAROLINA
DEPARTMENT OF TRANSPORTATION
RALEIGH

BRIDGE APPROACH SLAB DETAILS

NORTH CAROLINA PROFESSIONAL SEAL 041343 ENGINEER GREGORY R. COLS
11/13/2014

DRAWN BY : B.E. ATKINSON	DATE : 08/14		
CHECKED BY : G.R. COLS	DATE : 09/14		
DESIGN ENGINEER OF RECORD : G.R. COLS	DATE : 10/14		

MI ENGINEERING
1011 SCHAUB DRIVE, SUITE 100
RALEIGH, NC 27606
(919) 851-6606
FIRM PE NUMBER : P-0671

REVISIONS						SHEET NO.
NO.	BY:	DATE:	NO.	BY:	DATE:	S-117
1			3			TOTAL SHEETS
2			4			118

11/13/2014
11:55:52 PM
User: blanning
Filename: P:\NC Bridges\MI4001.01 - B-4565 Lenoir\Site 2\Structures\402.280.S02.B4565.SMU.BAS04.dgn