DocuSign Envelope ID: 43467A26-D9CD-406C-A40D-9CBBA3C28539

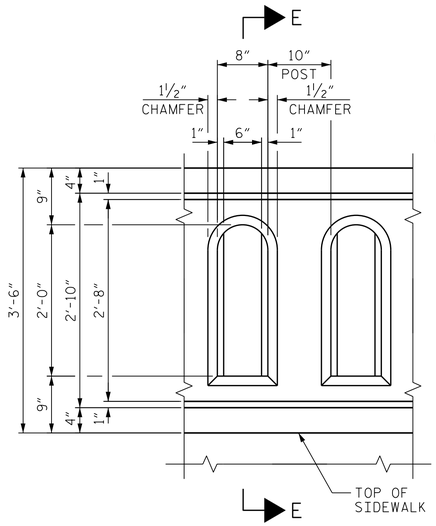

WINDOW DETAIL

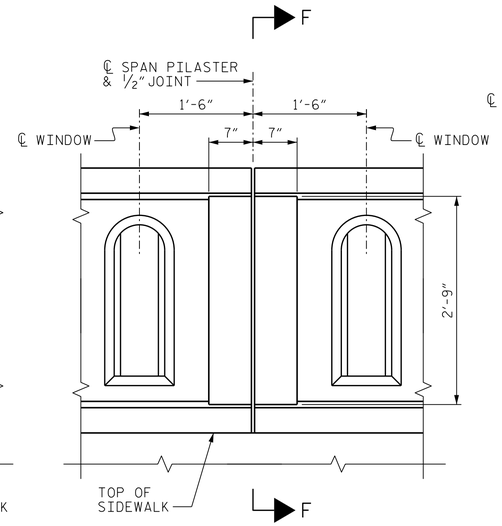

SPAN PILASTER

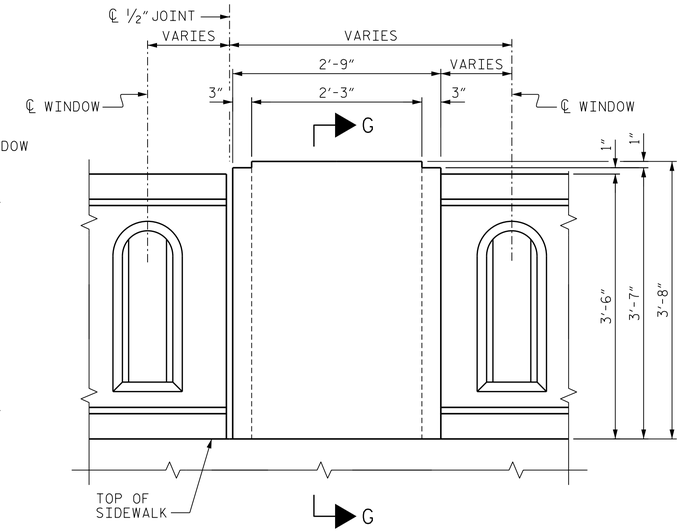

BENT PILASTER

(INTERIOR ELEVATION SHOWN)

BAR TYPES

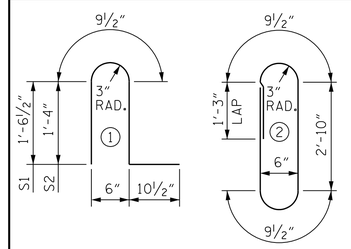

ALL BAR DIMENSIONS ARE OUT TO OUT.

BILL OF MATERIAL

FOR CLASSIC CONCRETE BRIDGE RAIL ONLY

STAGE I

BAR	NO.	SIZE	TYPE	LENGTH	WEIGHT
✱ S1	336	#5	1	4'-9"	1665

✱ EPOXY COATED REINFORCING STEEL 1665 LBS.

STAGE II

BAR	NO.	SIZE	TYPE	LENGTH	WEIGHT
✱ S2	354	#5	1	4'-4"	1600

✱ EPOXY COATED REINFORCING STEEL 1600 LBS.

STAGE III

BAR	NO.	SIZE	TYPE	LENGTH	WEIGHT
✱ B1	8	#7	STR	22'-2"	362
✱ B2	8	#7	STR	20'-6"	335
✱ B3	4	#7	STR	25'-8"	210
✱ B4	2	#7	STR	25'-0"	102
✱ B5	8	#7	STR	22'-11"	375
✱ B6	8	#7	STR	22'-0"	360
✱ B7	4	#7	STR	27'-8"	226
✱ B8	2	#7	STR	25'-0"	102
✱ B101	8	#5	STR	22'-2"	185
✱ B102	8	#5	STR	20'-6"	171
✱ B103	4	#5	STR	25'-8"	107
✱ B104	2	#5	STR	25'-0"	52
✱ B105	8	#5	STR	22'-11"	191
✱ B106	8	#5	STR	22'-0"	184
✱ B107	4	#5	STR	27'-8"	115
✱ B108	2	#5	STR	25'-0"	52
✱ S3	694	#5	2	8'-6"	6153

✱ EPOXY COATED REINFORCING STEEL 9282 LBS.

TOTAL QUANTITIES

⊛ ✱ EPOXY COATED REINFORCING STEEL 12547 LBS.

⊛ CLASS AA CONCRETE ✱✱ 46.6 CU. YDS.

CLASSIC CONCRETE BRIDGE RAIL

SUPERSTRUCTURE	517.73 LIN. FT.
APPROACH SLAB	100.00 LIN. FT.
TOTAL	617.73 LIN. FT.

✱✱ NOTE: CONCRETE QUANTITY DOES NOT INCLUDE THE VOLUME OF RAIL BELOW THE TOP OF SIDEWALK.

⊛ QUANTITY FOR CLASSIC CONCRETE BRIDGE RAIL ON APPROACH SLAB IS NOT INCLUDED. FOR CLASSIC CONCRETE BRIDGE RAIL ON APPROACH SLAB, SEE "BRIDGE APPROACH SLAB DETAILS" SHEET 3 OF 4.

NOTES

CLASSIC CONCRETE BRIDGE RAIL IN A CONTINUOUS UNIT SHALL NOT BE CAST UNTIL ALL SLAB CONCRETE IN THE UNIT HAS BEEN CAST AND HAS REACHED A MINIMUM COMPRESSIVE STRENGTH OF 3,000 PSI.

ALL REINFORCING STEEL IN CLASSIC CONCRETE BRIDGE RAIL SHALL BE EPOXY COATED.

ALL PARTS OF THE CLASSIC BARRIER RAILING INCLUDING BUT NOT LIMITED TO THE REINFORCING STEEL, CLASS AA CONCRETE, ANCHOR BOLTS AND INCIDENTALS SHALL BE INCLUDED IN THE UNIT PRICE BID PER LINEAR FOOT FOR "CLASSIC CONCRETE BRIDGE RAIL". NO SEPARATE MEASUREMENT OR PAYMENT WILL BE MADE FOR THESE ITEMS.

FOR CLASSIC CONCRETE BRIDGE RAIL, SEE SPECIAL PROVISIONS.

FOR ELECTRICAL CONDUIT DETAILS, SEE "ELECTRICAL CONDUIT SYSTEM" SHEET.

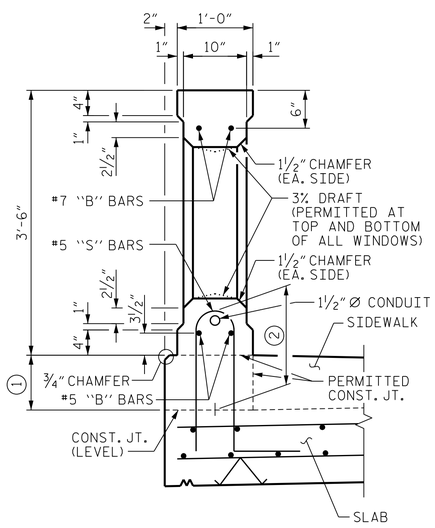

SECTION E-E

(SHOWING WINDOW OF RAIL)

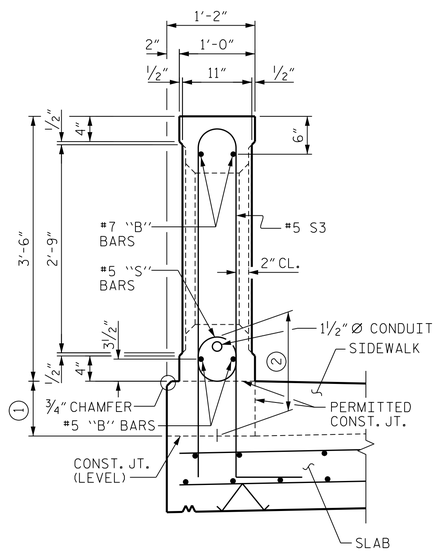

SECTION F-F

(SHOWING SPAN PILASTER)

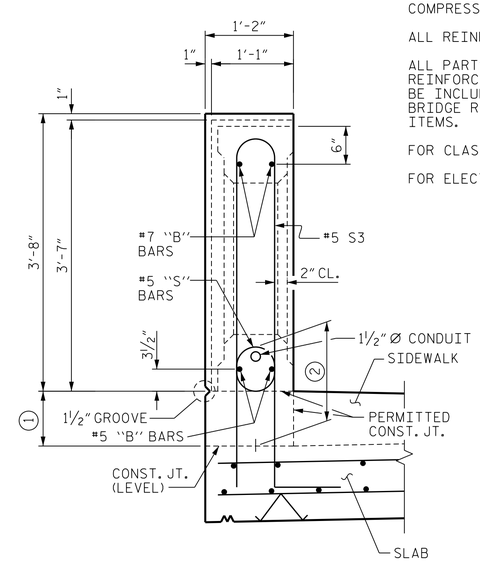

SECTION G-G

(SHOWING BENT PILASTER)

① 8¾" LEFT SIDE
6" RIGHT SIDE

② 1'-3½" LEFT SIDE
1'-1" RIGHT SIDE

PROJECT NO. B-4565

LENOIR COUNTY

STATION: 29+57.00 -L-

SHEET 5 OF 5

STATE OF NORTH CAROLINA
DEPARTMENT OF TRANSPORTATION
RALEIGH

SUPERSTRUCTURE

CLASSIC CONCRETE BRIDGE RAIL WITH SIDEWALK

NORTH CAROLINA PROFESSIONAL SEAL 041343 ENGINEER GREGORY R. COLS

11/13/2014

MI ENGINEERING
1011 SCHAUB DRIVE, SUITE 100
RALEIGH, NC 27606
(919) 851-6606
FIRM PE NUMBER : P-0671

REVISIONS								SHEET NO.
NO.	BY:	DATE:	NO.	BY:	DATE:			S-93
1			3					TOTAL SHEETS
2			4					118

DRAWN BY :	B.E. ATKINSON	DATE :	07/14
CHECKED BY :	G.R. COLS	DATE :	09/14
DESIGN ENGINEER OF RECORD :	G.R. COLS	DATE :	10/14

11/13/2014
1:15:03 PM
User: blanning
Filename: P:\NC Bridges\MI4001.01 - B-4565 Lenoir\Site 2\Structures\A02.165_S02_B4565_SMU_CCR05.dgn