DocuSign Envelope ID: 43467A26-D9CD-406C-A40D-9CBBA3C28539

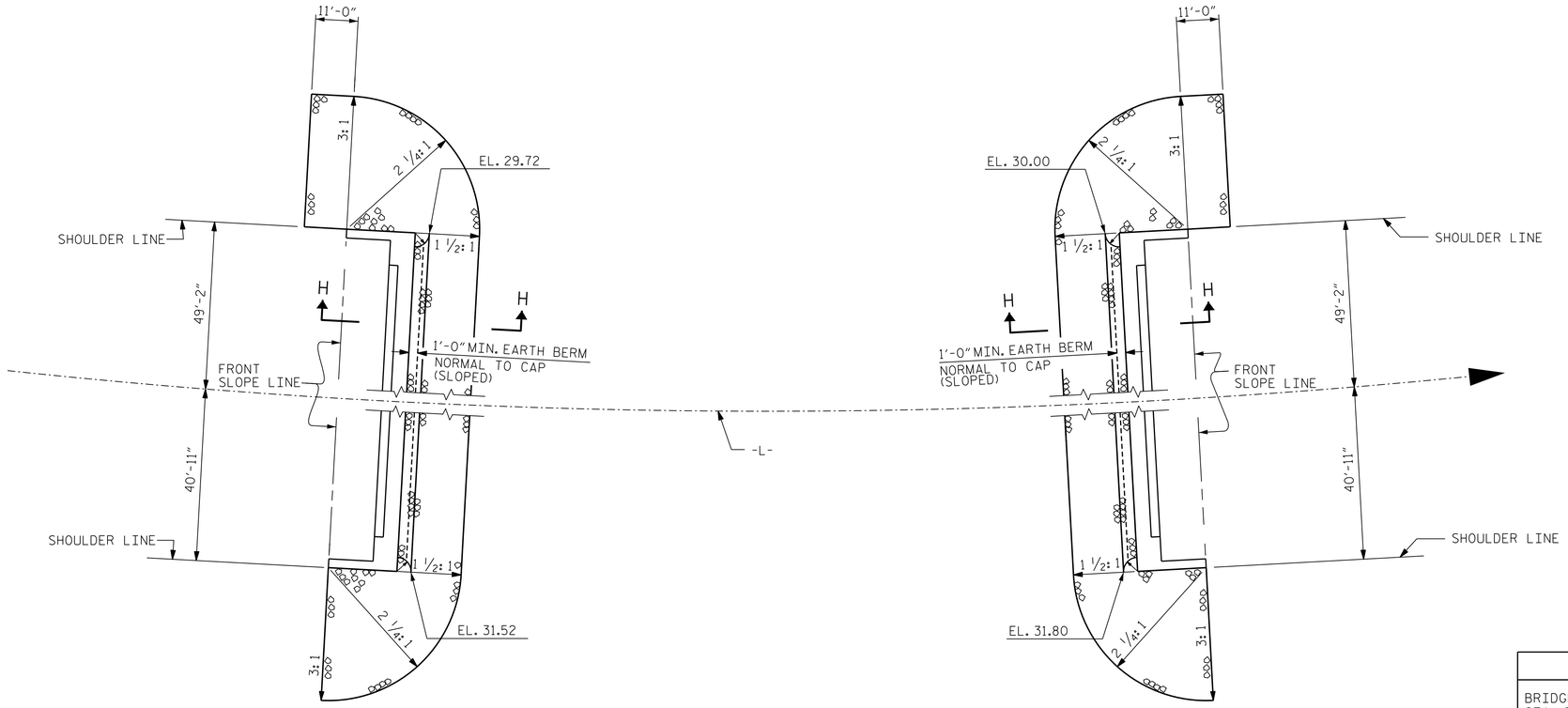

@ END BENT 1

@ END BENT 2

ESTIMATED QUANTITIES

BRIDGE @ STA. 29+57.00 -L-	RIP RAP CLASS II (2'-0" THICK)	GEOTEXTILE FOR DRAINAGE
	TONS	SQUARE YARDS
END BENT 1	423	470
END BENT 2	433	481

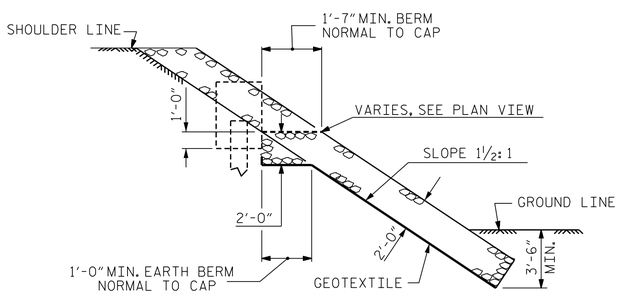

SECTION H-H

PLAN

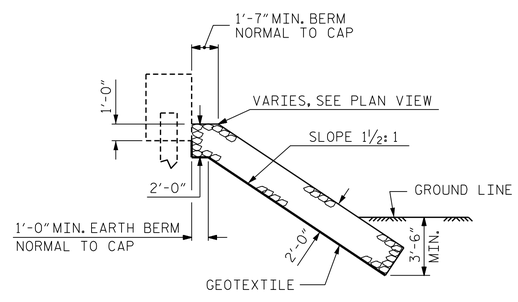

℄ SECTION

BERM RIP RAPPED

PROJECT NO. B-4565

LENOIR COUNTY

STATION: 29+57.00 -L-

STATE OF NORTH CAROLINA
DEPARTMENT OF TRANSPORTATION
RALEIGH

RIP RAP DETAILS

NORTH CAROLINA PROFESSIONAL SEAL 041343 ENGINEER GREGORY R. COLS

11/13/2014

MI ENGINEERING
1011 SCHAUB DRIVE, SUITE 100
RALEIGH, NC 27606
(919) 851-6606
FIRM PE NUMBER : P-0671

REVISIONS							SHEET NO.
NO.	BY:	DATE:	NO.	BY:	DATE:		S-113
1			3				TOTAL SHEETS
2			4				118

DRAWN BY :	B.E. ATKINSON	DATE :	08/14
CHECKED BY :	G.R. COLS	DATE :	09/14
DESIGN ENGINEER OF RECORD :	G.R. COLS	DATE :	10/14

11/13/2014
1:15:43 PM
User: blanning
Filename: P:\NC Bridges\MI4001.01 - B-4565 Lenoir\Site 2\Structures\402.260.S02.B4565_SMU_RR01.dgn