DocuSign Envelope ID: 43467A26-D9CD-406C-A40D-9CBBA3C28539

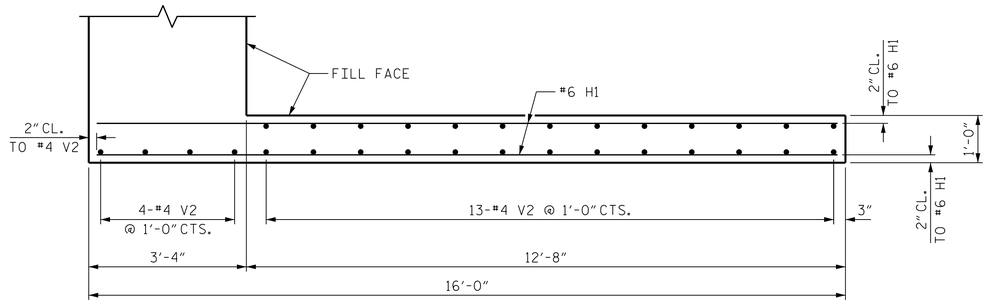

PLAN OF WING (W1)

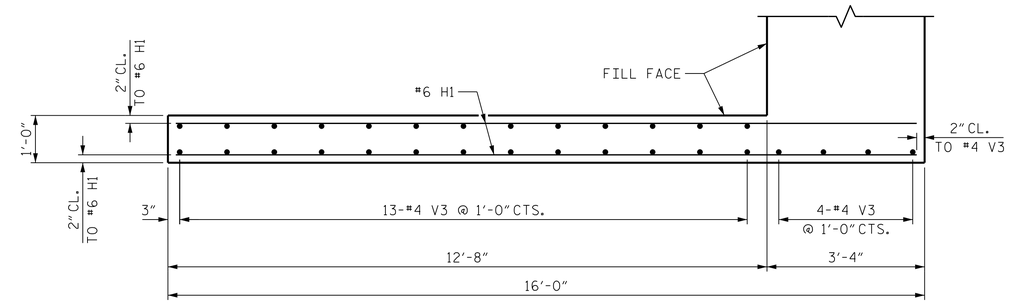

PLAN OF WING (W2)

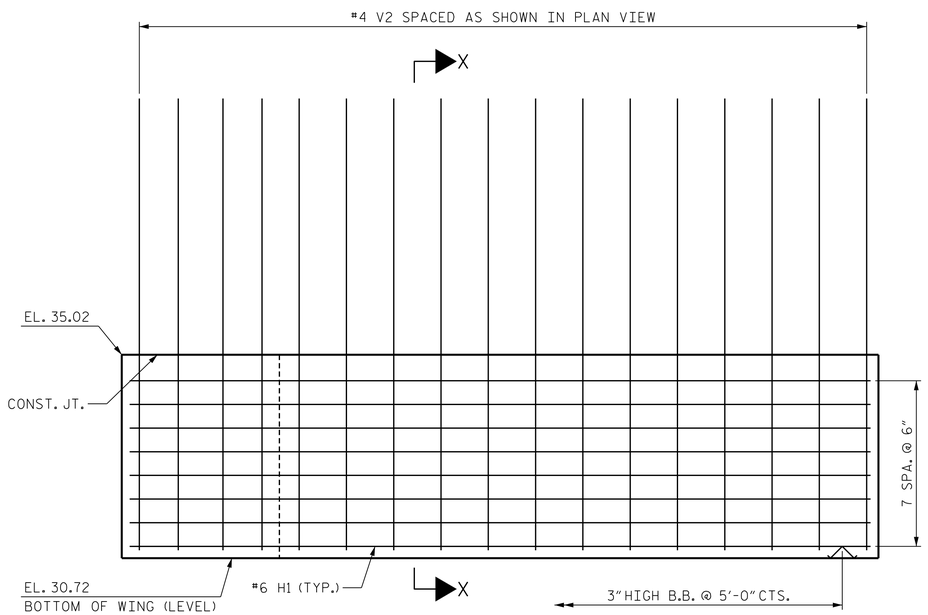

ELEVATION OF WING (W1)

STAGE I

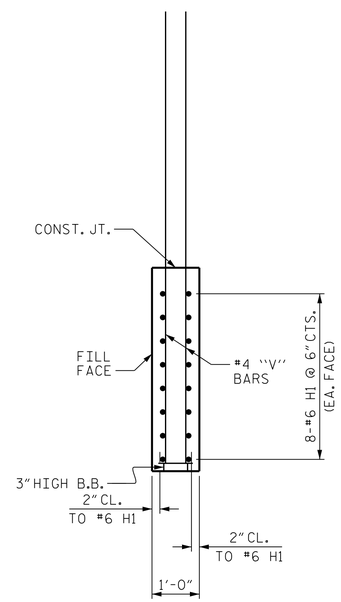

SECTION X-X

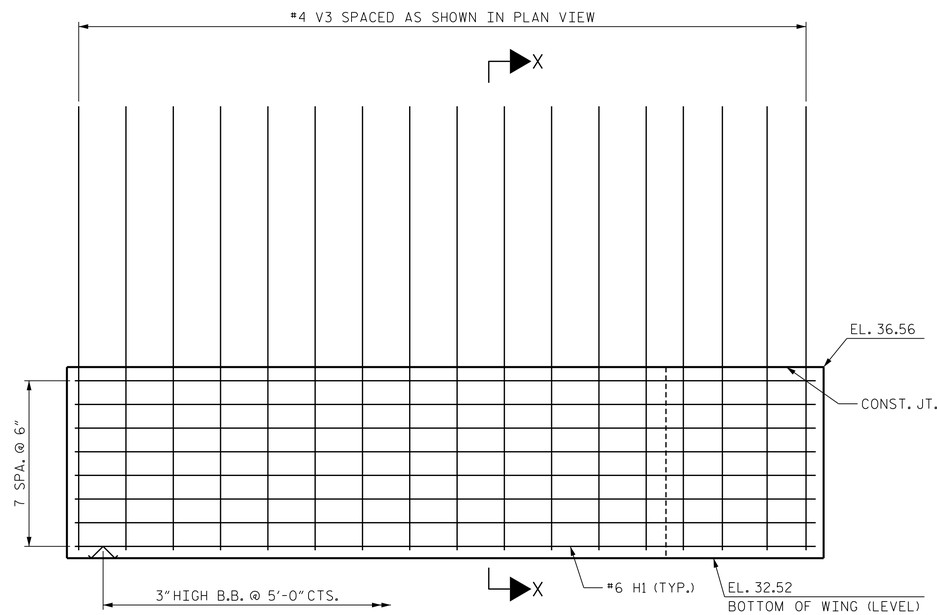

ELEVATION OF WING (W2)

STAGE II

PROJECT NO. B-4565

LENOIR COUNTY

STATION: 29+57.00 -L-

SHEET 3 OF 4

STATE OF NORTH CAROLINA
DEPARTMENT OF TRANSPORTATION
RALEIGH

SUBSTRUCTURE

INTEGRAL END BENT 1 WING DETAILS

NORTH CAROLINA PROFESSIONAL SEAL 040343 ENGINEER GREGORY R. COLS

11/13/2014

MI ENGINEERING
1011 SCHAUB DRIVE, SUITE 100
RALEIGH, NC 27606
(919) 851-6606
FIRM PE NUMBER : P-0671

REVISIONS						
NO.	BY:	DATE:	NO.	BY:	DATE:	
1			3			
2			4			

SHEET NO. S-100

TOTAL SHEETS 118

DRAWN BY :	B.E. LANNING	DATE :	09/14
CHECKED BY :	G.R. COLS	DATE :	09/14
DESIGN ENGINEER OF RECORD :	G.R. COLS	DATE :	10/14

11/13/2014
1:15:16 PM
User: blanning
Filename: P:\NC Bridges\MI4001.01 - B-4565 Lenoir\Site 2\Structures\402.195.S02.B4565.SMU.E103.dgn