DocuSign Envelope ID: 43467A26-D9CD-406C-A40D-9CBBA3C28539

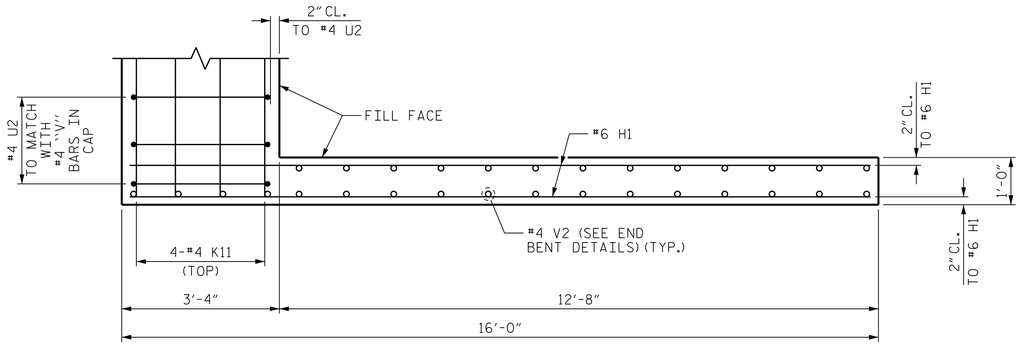

PLAN OF WING (W1)

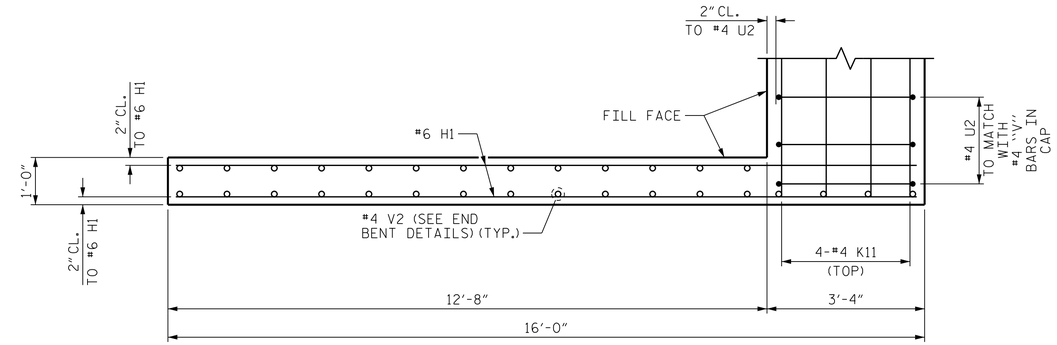

PLAN OF WING (W3)

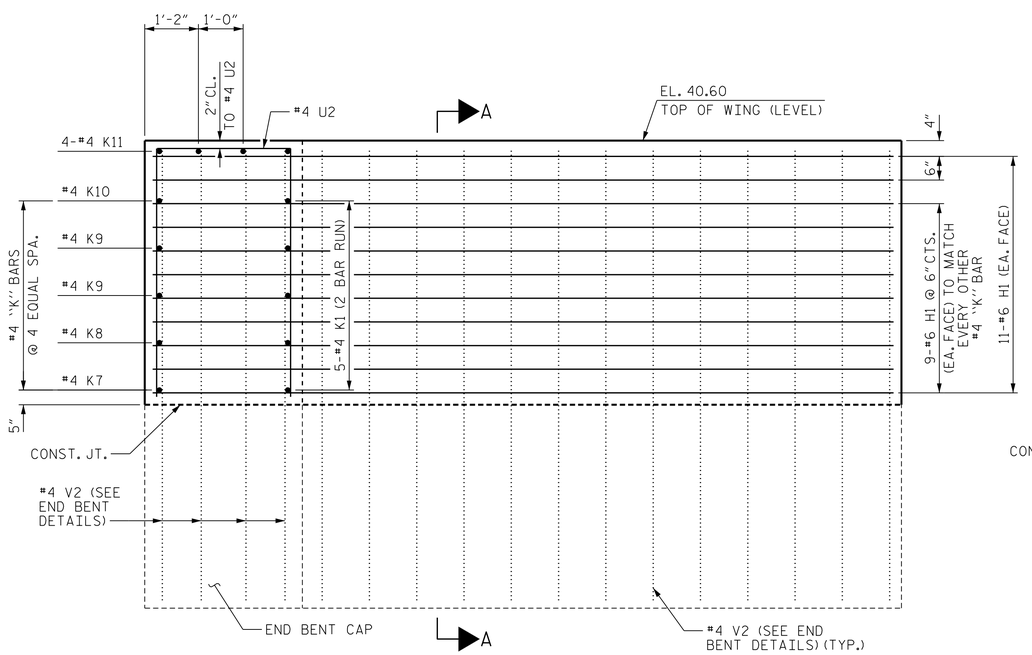

ELEVATION OF WING (W1)

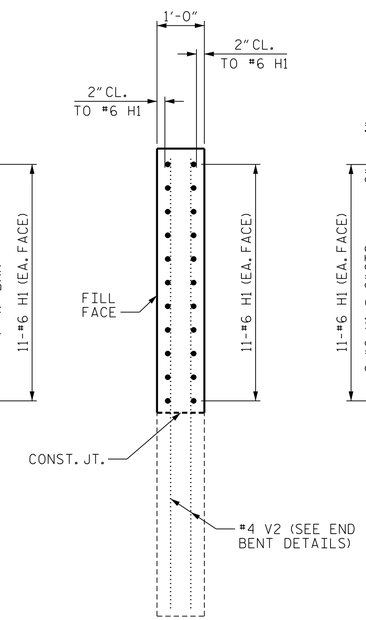

SECTION A-A

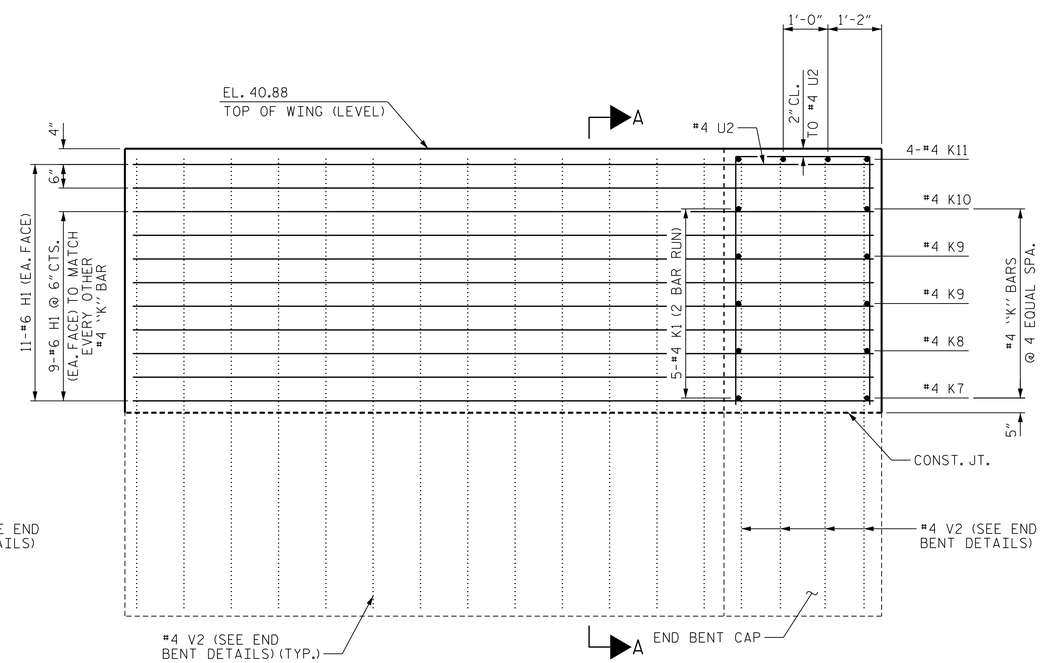

ELEVATION OF WING (W3)

NOTES

LOWER PORTION OF WINGS BUILT WITH INTEGRAL END BENTS. FOR DETAILS AND REINFORCING STEEL, SEE INTEGRAL END BENT SHEETS.

PROJECT NO. B-4565

LENOIR COUNTY

STATION: 29+57.00 -L-

SHEET 9 OF 10

STATE OF NORTH CAROLINA
DEPARTMENT OF TRANSPORTATION
RALEIGH

SUPERSTRUCTURE

PLAN OF SPANS
WING DETAILS
STAGE I

NORTH CAROLINA PROFESSIONAL SEAL 040343 ENGINEER GREGORY R. COLS
11/13/2014

MI ENGINEERING
1011 SCHAUB DRIVE, SUITE 100
RALEIGH, NC 27606
(919) 851-6606
FIRM PE NUMBER : P-0671

REVISIONS						
NO.	BY:	DATE:	NO.	BY:	DATE:	
1			3			
2			4			

SHEET NO. S-78
TOTAL SHEETS 118

DRAWN BY : B.E. LANNING DATE : 08/14
CHECKED BY : G.R. COLS DATE : 09/14
DESIGN ENGINEER OF RECORD : G.R. COLS DATE : 10/14

11/13/2014
1:14:32 PM
User: blanning
Filename: P:\NC Bridges\MI4001.01 - B-4565 Lenoir\Site 2\Structures\402.090.S02.B4565.SMU.PS09.dgn