DocuSign Envelope ID: 43467A26-D9CD-406C-A40D-9CBBA3C28539

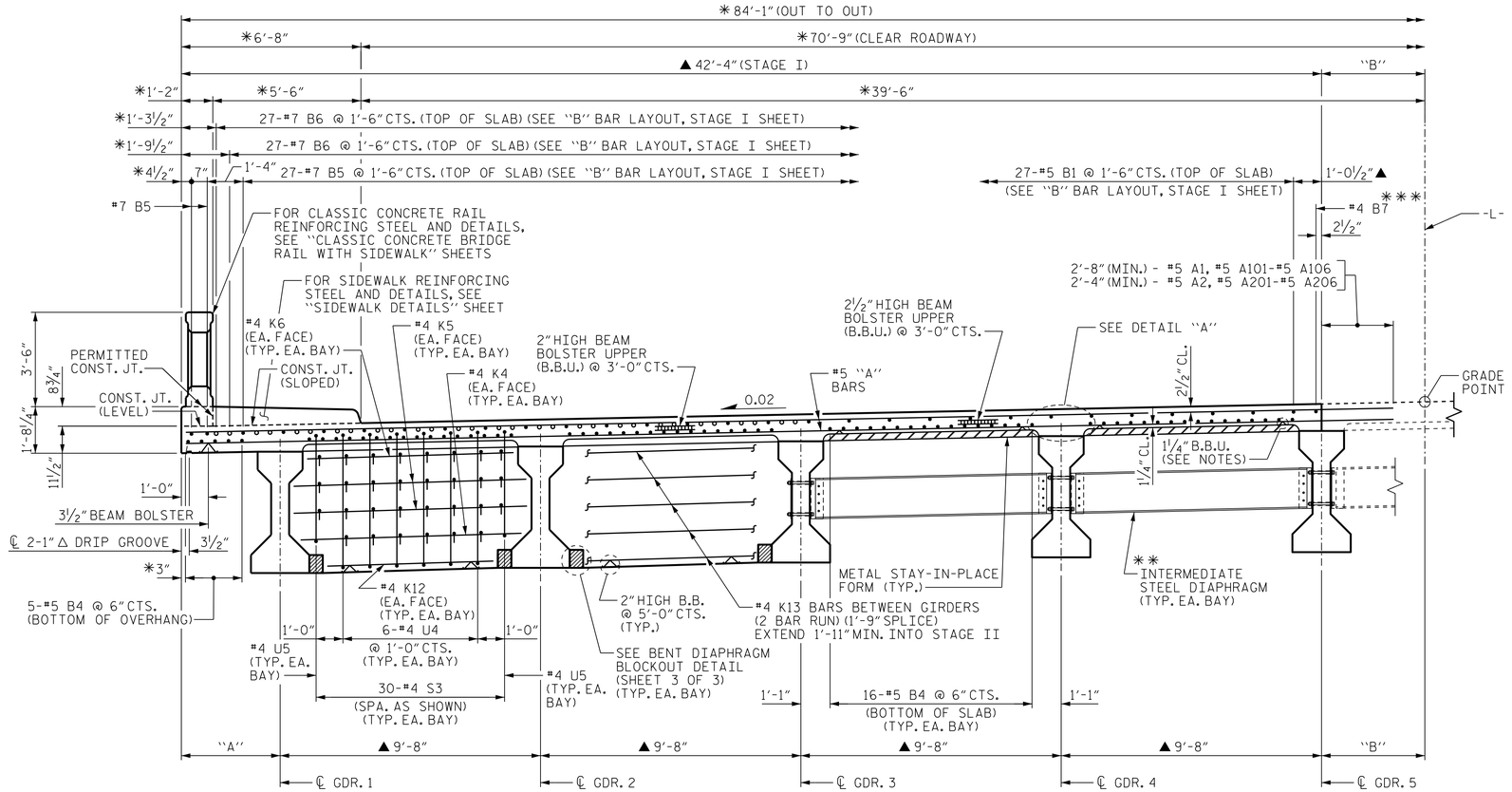

AT BENT DIAPHRAGM & SPAN B

AT INTERMEDIATE DIAPHRAGM
SPANS A OR C

TYPICAL SECTION

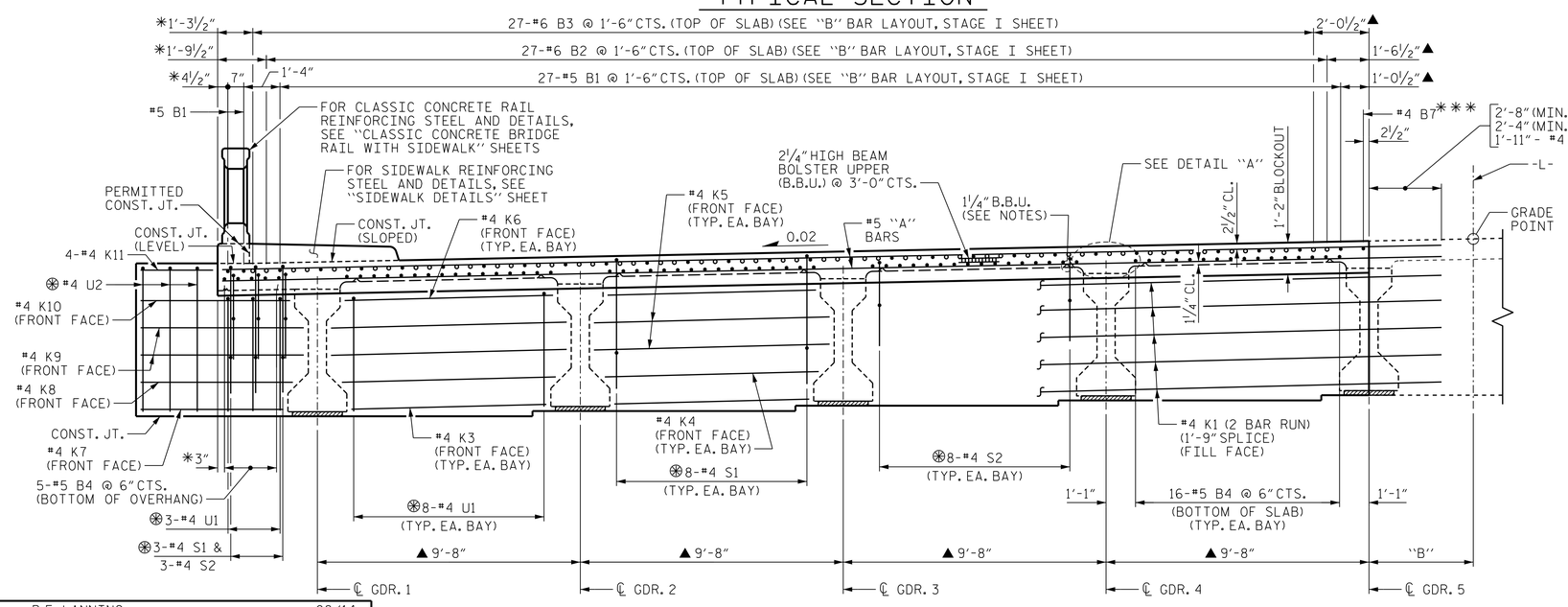

TYPICAL SECTION AT INTEGRAL END BENT

(FOR ADDITIONAL DIMENSIONS, SEE TYPICAL SECTION ABOVE)

⊛#4 S1, #4 S2, #4 U1, #4 U2 & #4 U3 BARS TO MATCH WITH #4 "V" BARS IN INTEGRAL END BENT CAP.

NOTES

PROVIDE 1¼" HIGH BEAM BOLSTERS UPPER AT 4'-0" CTS. ATOP THE METAL STAY-IN-PLACE FORMS TO SUPPORT THE BOTTOM MAT OF "A" BARS. WHEN USING REMOVABLE FORMS, PROVIDE CONTINUOUS HIGH CHAIRS FOR METAL DECK (C.H.C.M.) @ 4'-0" CTS. WITH A HEIGHT TO SUPPORT THE BOTTOM MAT OF "A" BARS A CLEAR DISTANCE OF 2½" ABOVE THE TOP OF THE REMOVABLE FORM.

LONGITUDINAL STEEL MAY BE SHIFTED SLIGHTLY, AS NECESSARY, TO AVOID INTERFERENCE WITH STIRRUPS IN PRESTRESSED CONCRETE GIRDERS.

PREVIOUSLY CAST CONCRETE IN A CONTINUOUS UNIT SHALL HAVE ATTAINED A MINIMUM COMPRESSIVE STRENGTH OF 3,000 PSI BEFORE ADDITIONAL CONCRETE IS CAST IN THE UNIT.

CLASSIC CONCRETE BRIDGE RAIL, CONCRETE SIDEWALK AND CONCRETE MEDIAN IN A CONTINUOUS UNIT SHALL NOT BE CAST UNTIL ALL SLAB CONCRETE IN THE UNIT HAS BEEN CAST AND HAS REACHED A MINIMUM COMPRESSIVE STRENGTH OF 3,000 PSI.

SIDEWALK AND CLASSIC CONCRETE BRIDGE RAIL SHALL BE POURED IN STAGE III. SEE "SIDEWALK DETAILS" AND "CLASSIC CONCRETE BRIDGE RAIL" SHEETS.

✱✱ FOR INTERMEDIATE STEEL DIAPHRAGM DETAILS, SEE "INTERMEDIATE STEEL DIAPHRAGMS FOR TYPE IV PRESTRESSED CONCRETE GIRDERS" SHEET.

▲ DIMENSIONS RADIAL THRU WORK POINT.

✱ RADIAL DIMENSIONS

✱✱✱ PLACED PARALLEL TO CONSTRUCTION JOINT.

ALL DIMENSIONS ARE HORIZONTAL OR VERTICAL UNLESS OTHERWISE NOTED.

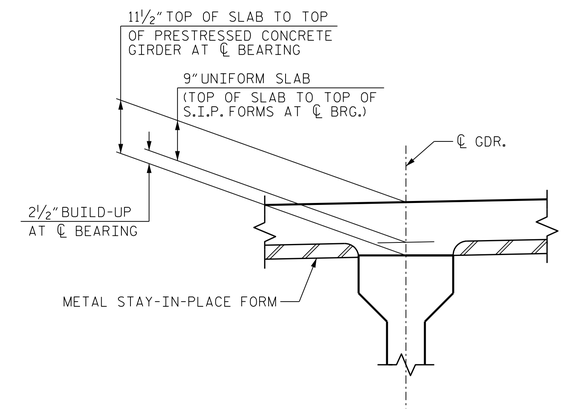

DETAIL "A"

DIMENSION TABLE				
	"A"	"B"	"C"	"D"
RADIAL THRU W.P.	3'-8"	3'-10"	5'-10"	3'-1"
AT MID-SPANS A & C	3'-0 15/16" (MIN.)	4'-5¼" (MAX.)	5'-2¾" (MIN.)	3'-8⅜" (MAX.)
AT MID-SPAN B	3'-2½" (MIN.)	4'-5⅜" (MAX.)	5'-4⅜" (MIN.)	3'-6¾" (MAX.)

PROJECT NO. B-4565

LENOIR COUNTY

STATION: 29+57.00 -L-

SHEET 1 OF 3

STATE OF NORTH CAROLINA
DEPARTMENT OF TRANSPORTATION
RALEIGH

SUPERSTRUCTURE

TYPICAL SECTION
STAGE I

NORTH CAROLINA PROFESSIONAL SEAL 040343 ENGINEER GREGORY R. COLS
11/13/2014

MI ENGINEERING
1011 SCHAUB DRIVE, SUITE 100
RALEIGH, NC 27606
(919) 851-6606
FIRM PE NUMBER : P-0671

REVISIONS						
NO.	BY:	DATE:	NO.	BY:	DATE:	
1			3			
2			4			

SHEET NO. S-67
TOTAL SHEETS 118

DRAWN BY : B.E. LANNING DATE : 08/14
CHECKED BY : G.R. COLS DATE : 08/14
DESIGN ENGINEER OF RECORD : G.R. COLS DATE : 10/14

11/13/2014
1:14:08 PM
User: blanning
Filename: P:\NC Bridges\MI4001.01 - B-4565 Lenoir\Site 2\Structures\402_035_S02_B4565_SMU_TS01.dgn