DocuSign Envelope ID: 43467A26-D9CD-406C-A40D-9CBBA3C28539

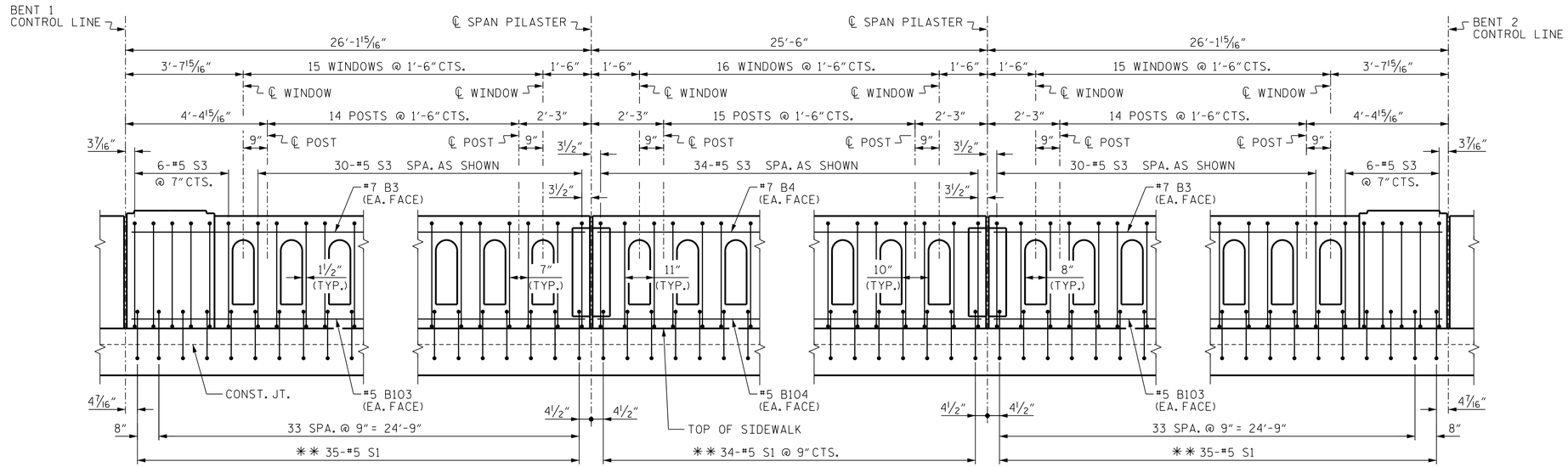

LEFT RAIL

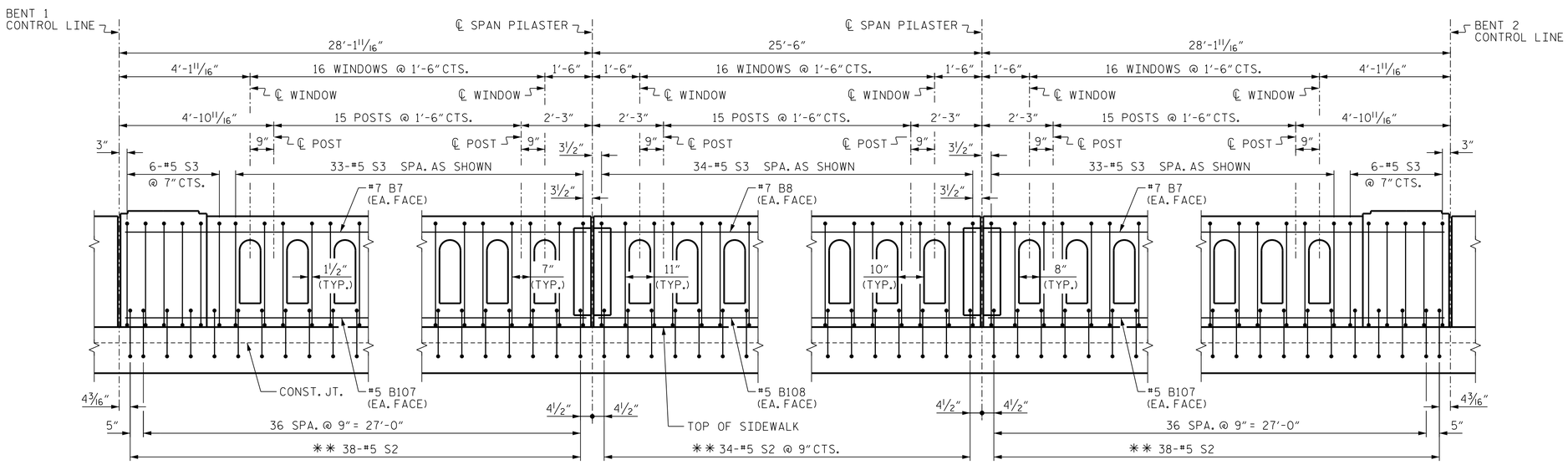

RIGHT RAIL

REINFORCING PLACEMENT - SPAN B

(DIMENSIONS SHOWN ARE ALONG THE OUTSIDE EDGE OF DECK)

** #5 S1 & #5 S2 ARE CAST IN THE DECK SLAB.

PROJECT NO. B-4565

LENOIR COUNTY

STATION: 29+57.00 -L-

SHEET 3 OF 5

STATE OF NORTH CAROLINA
DEPARTMENT OF TRANSPORTATION
RALEIGH

SUPERSTRUCTURE

CLASSIC CONCRETE BRIDGE RAIL WITH SIDEWALK

NORTH CAROLINA PROFESSIONAL SEAL 041543 ENGINEER GREGORY R. COLS

11/13/2014

MI ENGINEERING
1011 SCHAUB DRIVE, SUITE 100
RALEIGH, NC 27606
(919) 851-6606
FIRM PE NUMBER : P-0671

REVISIONS						SHEET NO.
NO.	BY:	DATE:	NO.	BY:	DATE:	S-91
1			3			TOTAL SHEETS
2			4			118

DRAWN BY :	B.E. ATKINSON	DATE :	07/14
CHECKED BY :	G.R. COLS	DATE :	09/14
DESIGN ENGINEER OF RECORD :	G.R. COLS	DATE :	10/14

11/13/2014
11:14:59 PM
User: blanning
Filename: P:\NC Bridges\MI4001.01 - B-4565 Lenoir\Site 2\Structures\402_I55_S02_B4565_SMU_CCR03.dgn