DocuSign Envelope ID: 43467A26-D9CD-406C-A40D-9CBBA3C28539

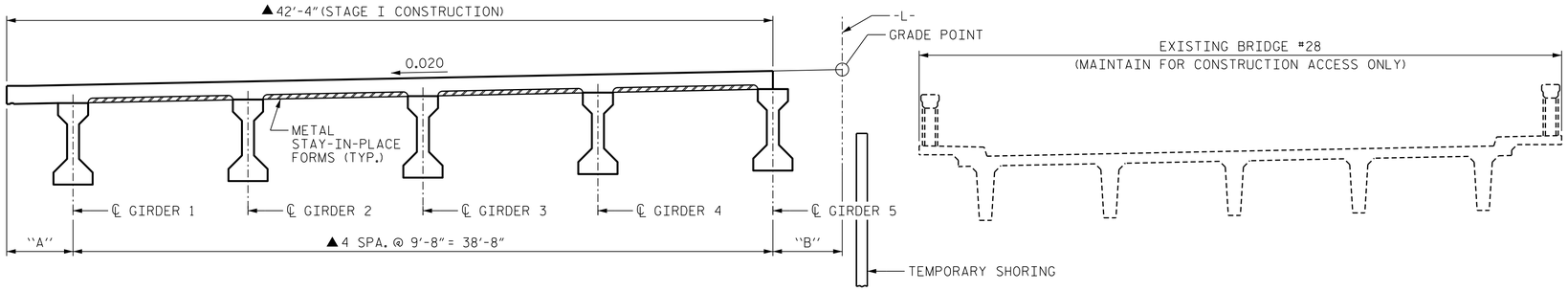

STAGE I CONSTRUCTION

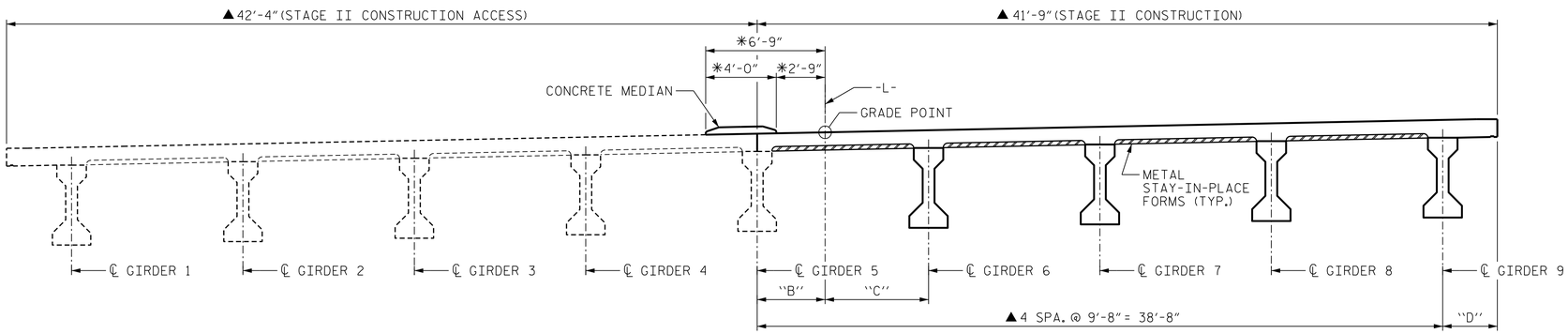

STAGE II CONSTRUCTION

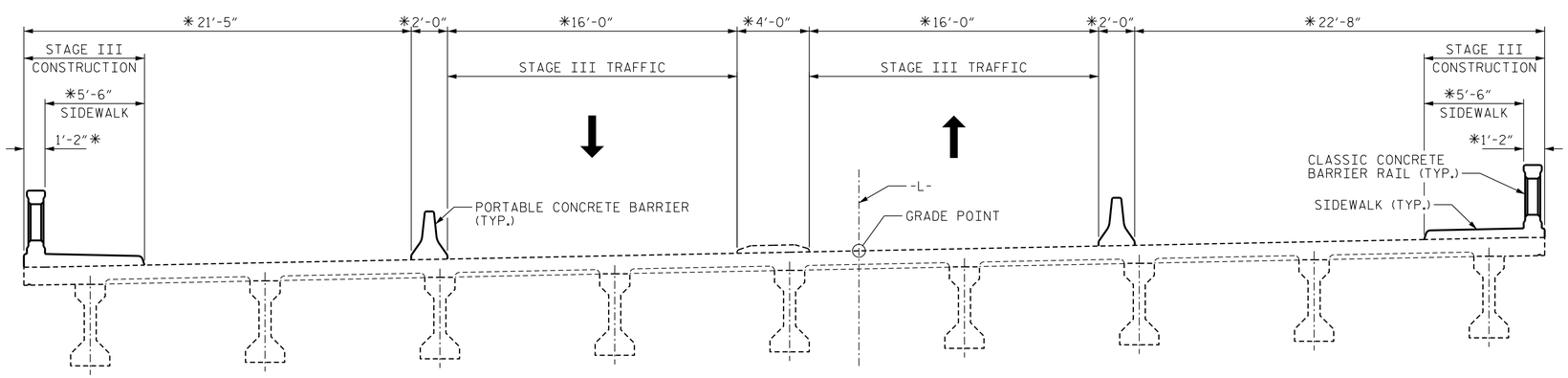

STAGE III CONSTRUCTION

CONSTRUCTION SEQUENCE

STAGE I AND STAGE II MAY BE COMBINED AT CONTRACTOR'S OPTION.

STAGE I CONSTRUCTION:

1. MAINTAIN CONSTRUCTION ACCESS ON EXISTING WBL BRIDGE #28.
2. CONSTRUCT LEFT SIDE OF PROPOSED STRUCTURE.

STAGE II CONSTRUCTION:

1. MOVE CONSTRUCTION ACCESS TO STAGE I.
2. REMOVE EXISTING WBL BRIDGE #28.
3. CONSTRUCT RIGHT SIDE OF PROPOSED STRUCTURE.
4. CONSTRUCT CONCRETE MEDIAN.
5. CONSTRUCT APPROACH SLABS.

STAGE III CONSTRUCTION:

1. OPEN TRAFFIC TO STAGE III TRAFFIC IN AREA AS SHOWN.
2. CONSTRUCT BOTH SIDEWALKS, CLASSIC CONCRETE BARRIER RAILS AND LIGHT OUTRIGGERS.
3. REMOVE PORTABLE CONCRETE BARRIERS.

DIMENSION TABLE

	"A"	"B"	"C"	"D"
RADIAL THRU W.P.	3'-8"	3'-10"	5'-10"	3'-1"
AT MID-SPANS A & C	3'-0 15/16" (MIN.)	4'-5 1/4" (MAX.)	5'-2 3/4" (MIN.)	3'-8 3/8" (MAX.)
AT MID-SPAN B	3'-2 1/2" (MIN.)	4'-5 3/8" (MAX.)	5'-4 3/8" (MIN.)	3'-6 3/4" (MAX.)

✳ RADIAL DIMENSION

▲ DIMENSIONS RADIAL THRU WORK POINT.

NOTES

FOR TRAFFIC PHASING, SEE TRAFFIC CONTROL PLANS.

THE PORTABLE CONCRETE BARRIER IS A TRAFFIC CONTROL PAY ITEM.

SEE TRAFFIC CONTROL PLANS FOR LOCATION AND PAY LIMITS OF PORTABLE CONCRETE BARRIER.

FOR TEMPORARY SHORING, SEE NOTES ON GENERAL DRAWING, SHEET 4 OF 4.

PROJECT NO. B-4565

LENOIR COUNTY

STATION: 29+57.00 -L-

STATE OF NORTH CAROLINA
DEPARTMENT OF TRANSPORTATION
RALEIGH

CONSTRUCTION STAGING SEQUENCE

NORTH CAROLINA PROFESSIONAL SEAL 041343 ENGINEER GREGORY R. COLS

11/13/2014

MI ENGINEERING
1011 SCHAUB DRIVE, SUITE 100
RALEIGH, NC 27606
(919) 851-6606
FIRM PE NUMBER : P-0671

REVISIONS						
NO.	BY:	DATE:	NO.	BY:	DATE:	
1			3			
2			4			

SHEET NO. S-66

TOTAL SHEETS 118

DRAWN BY : B.E. LANNING DATE : 08/14
CHECKED BY : G.R. COLS DATE : 09/14
DESIGN ENGINEER OF RECORD : G.R. COLS DATE : 10/14

11/13/2014
1:14:06 PM
User: blanning
Filename: P:\NC Bridges\MI400.01 - B-4565 Lenoir\Site 2\Structures\402_030_S02_B4565_SMU_PC01.dgn