DocuSign Envelope ID: 43467A26-D9CD-406C-A40D-9CBBA3C28539

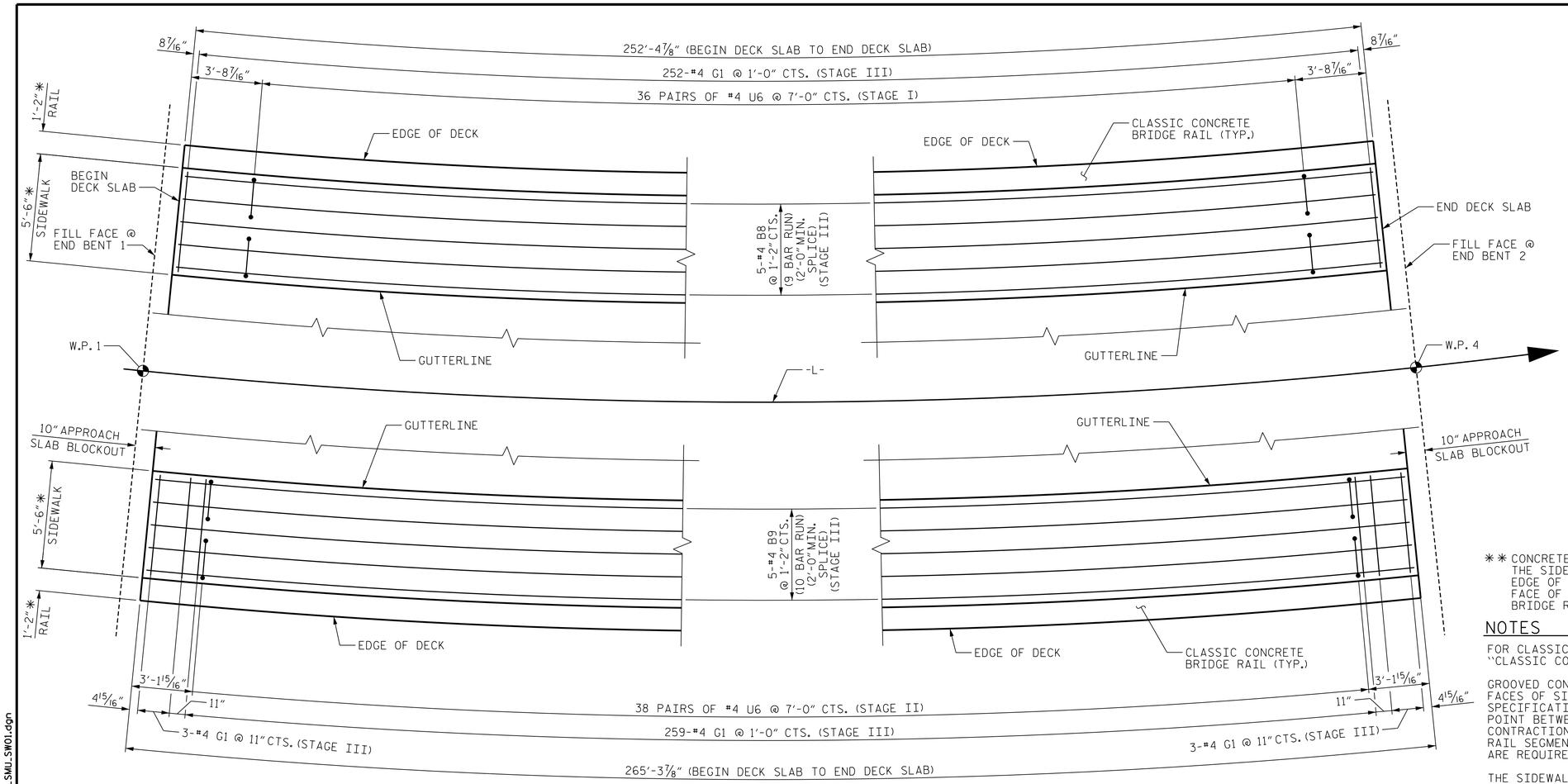

PLAN OF SIDEWALK

SIDEWALK AND REINFORCING DIMENSIONS ARE MEASURED ALONG ARC AT EDGE OF DECK.

✱ RADIAL DIMENSION

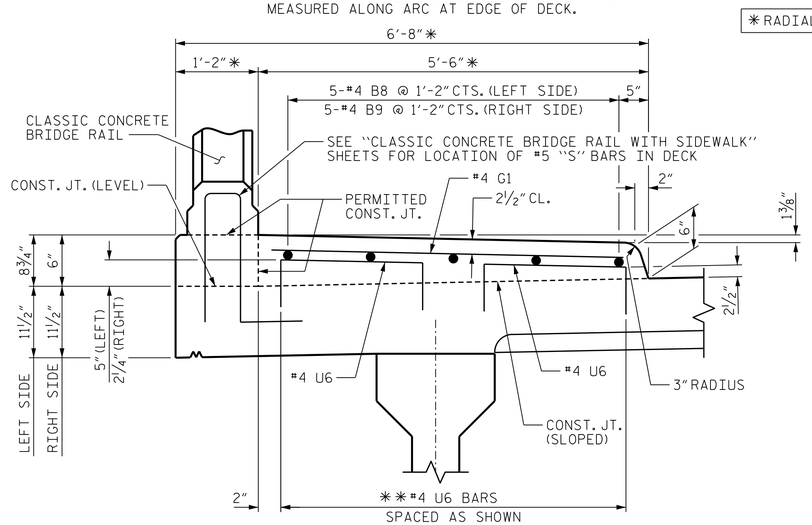

SECTION THRU SIDEWALK

✱✱#4 U6 BARS MAY BE PUSHED INTO GREEN CONCRETE AFTER SPAN HAS BEEN SCREEDED OFF.

BILL OF MATERIAL
FOR SIDEWALK ONLY

STAGE I

BAR	NO.	SIZE	TYPE	LENGTH	WEIGHT
✱U6	72	#4	1	3'-0"	144

✱EPOXY COATED REINFORCING STEEL 144 LBS.

STAGE II

BAR	NO.	SIZE	TYPE	LENGTH	WEIGHT
✱U6	76	#4	1	3'-0"	152

✱EPOXY COATED REINFORCING STEEL 152 LBS.

STAGE III

BAR	NO.	SIZE	TYPE	LENGTH	WEIGHT
✱B8	45	#4	STR	29'-11"	899
✱B9	50	#4	STR	28'-4"	946
✱G1	517	#4	STR	5'-0"	1727

✱EPOXY COATED REINFORCING STEEL 3572 LBS.

CLASS AA CONCRETE ✱✱ 72.3 C.Y.

BAR TYPES

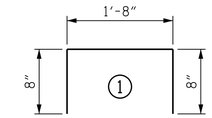

ALL BAR DIMENSIONS ARE OUT TO OUT.

✱✱ CONCRETE VOLUME ASSUMES THAT THE SIDEWALK IS POURED TO THE EDGE OF DECK RATHER THAN THE FACE OF THE CLASSIC CONCRETE BRIDGE RAIL.

NOTES

FOR CLASSIC CONCRETE BRIDGE RAIL REINFORCING STEEL AND DETAILS, SEE "CLASSIC CONCRETE BRIDGE RAIL WITH SIDEWALK" SHEETS.

GROOVED CONTRACTION JOINTS 1/2" IN DEPTH, SHALL BE TOOLED IN ALL EXPOSED FACES OF SIDEWALK IN ACCORDANCE WITH ARTICLE 825-10(B) OF THE STANDARD SPECIFICATIONS. THE CONTRACTION JOINT SHALL BE LOCATED AT EACH THIRD POINT BETWEEN CLASSIC CONCRETE BRIDGE RAIL EXPANSION JOINTS. ONLY ONE CONTRACTION JOINT IS REQUIRED AT MIDPOINT OF CLASSIC CONCRETE BRIDGE RAIL SEGMENTS LESS THAN 20 FEET IN LENGTH AND NO CONTRACTION JOINTS ARE REQUIRED FOR THOSE SEGMENTS LESS THAN 10 FEET IN LENGTH.

THE SIDEWALK IN A CONTINUOUS UNIT SHALL NOT BE CAST UNTIL ALL SLAB CONCRETE IN THE UNIT HAS BEEN CAST AND HAS REACHED A MINIMUM COMPRESSIVE STRENGTH OF 3000 PSI.

NO SEPARATE MEASUREMENT OR PAYMENT WILL BE MADE FOR MATERIALS OR LABOR REQUIRED TO CONSTRUCT THE CONCRETE SIDEWALK. THE ENTIRE COST OF THIS WORK SHALL BE INCLUDED IN THE UNIT BID PRICE FOR THE REINFORCED CONCRETE DECK SLAB.

ALL REINFORCING STEEL IN SIDEWALK SHALL BE EPOXY COATED.

SIDEWALK AND CLASSIC CONCRETE BRIDGE RAIL SHALL BE POURED IN STAGE III.

PROJECT NO. B-4565
LENOIR COUNTY
STATION: 29+57.00 -L-

NORTH CAROLINA PROFESSIONAL SEAL 041343 ENGINEER GREGORY R. COLS
11/13/2014

STATE OF NORTH CAROLINA
DEPARTMENT OF TRANSPORTATION
RALEIGH

SUPERSTRUCTURE
SIDEWALK DETAILS

MI ENGINEERING
1011 SCHAUB DRIVE, SUITE 100
RALEIGH, NC 27606
(919) 851-6606
FIRM PE NUMBER : P-0671

REVISIONS								SHEET NO.
NO.	BY:	DATE:	NO.	BY:	DATE:			S-80
1			3					TOTAL SHEETS
2			4					118

DRAWN BY :	B.E. LANNING	DATE :	08/14
CHECKED BY :	G.R. COLS	DATE :	08/14
DESIGN ENGINEER OF RECORD :	G.R. COLS	DATE :	10/14

11/13/2014
1:14:36 PM
User: blanning
Filename: P:\NC Bridges\MI4001.01 - B-4565 Lenoir\Site 2\Structures\402_100_S02_B4565_SWU_SW01.dgn