DocuSign Envelope ID: 246E04CB-0C57-44B0-A31E-15B2E1C15B30

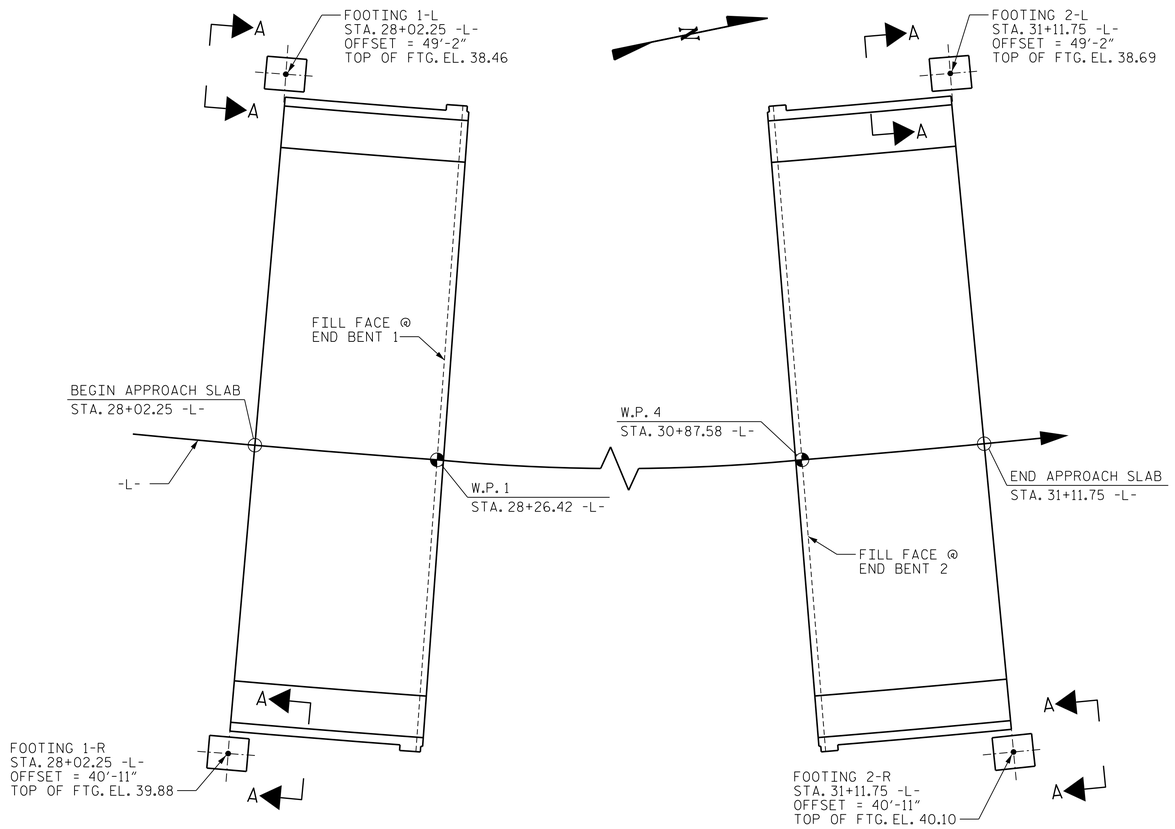

@ END BENT 1

@ END BENT 2

PLAN

NOTES

FOUNDATION MATERIAL SHALL HAVE A MINIMUM BEARING RESISTANCE OF 2.0 KSF.

FOR PLINTH DIMENSIONS, DETAILS AND EMBEDDED COLUMN BARS, SEE ARCHITECTURAL PLANS.

FOR ARCHITECTURAL PLINTH FOOTING, SEE SPECIAL PROVISIONS.

CONSTRUCTION OF THE ARCHITECTURAL ELEMENTS SHALL NOT BEGIN UNTIL THE FOOTING CONCRETE HAS REACHED A COMPRESSIVE STRENGTH OF 3000 PSI.

BILL OF MATERIAL
FOR ONE FOOTING (5 REQ'D.)

BAR	NO.	SIZE	TYPE	LENGTH	WEIGHT
T1	14	#4	STR	4'-9"	44
T2	12	#4	STR	3'-10"	31
REINFORCING STEEL				LBS.	75
CLASS A CONCRETE				C.Y.	1.0

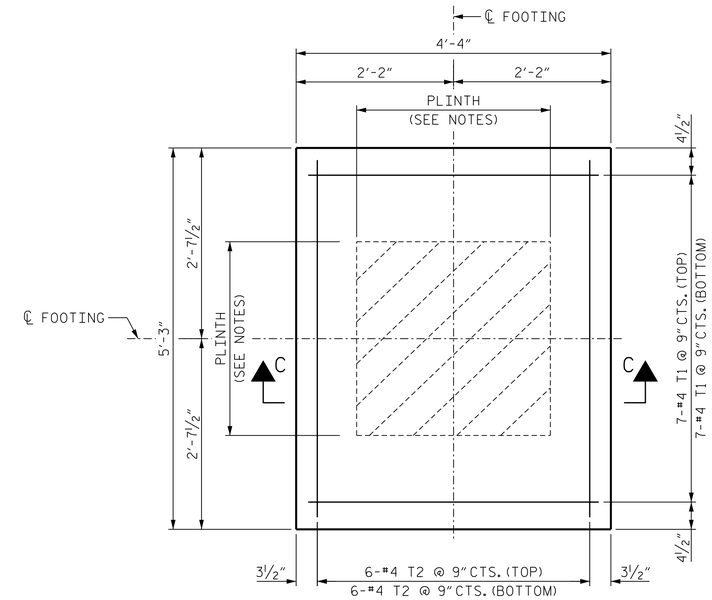

FOOTING PLAN

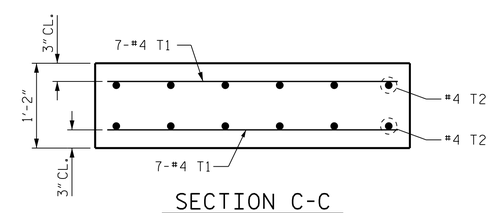

SECTION C-C

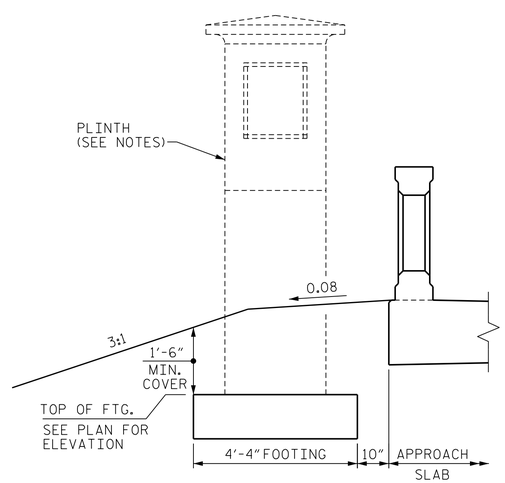

VIEW A-A

PROJECT NO. B-4565

LENOIR COUNTY

STATION: 29+57.00 -L-

STATE OF NORTH CAROLINA
DEPARTMENT OF TRANSPORTATION
RALEIGH

FOOTING DETAILS FOR ARCHITECTURAL ELEMENTS

NORTH CAROLINA PROFESSIONAL SEAL 041343 ENGINEER GREGORY R. COLS
11/17/2014

MI ENGINEERING
1011 SCHAUB DRIVE, SUITE 100
RALEIGH, NC 27606
(919) 851-6606
FIRM PE NUMBER : P-0671

REVISIONS						
NO.	BY:	DATE:	NO.	BY:	DATE:	
1			3			
2			4			

SHEET NO. S-118
TOTAL SHEETS 118

DRAWN BY :	B.E. LANNING	DATE :	10/14
CHECKED BY :	A.K. ORR	DATE :	10/14
DESIGN ENGINEER OF RECORD :	G.R. COLS	DATE :	10/14

11/17/2014
2:40:25 PM
User: blanning
Filename: P:\NC Bridges\MI4001.01 - B-4565 Lenoir\Site 2\Structures\402.285_S02_B4565_SMU_PLDTL01.dgn