DocuSign Envelope ID: 43467A26-D9CD-406C-A40D-9CBBA3C28539

NOTES

FOR DETAIL "A" AND SHEAR KEY DETAIL, SEE SHEET 1 OF 4.

FOR ADDITIONAL NOTES, SEE SHEET 1 OF 4.

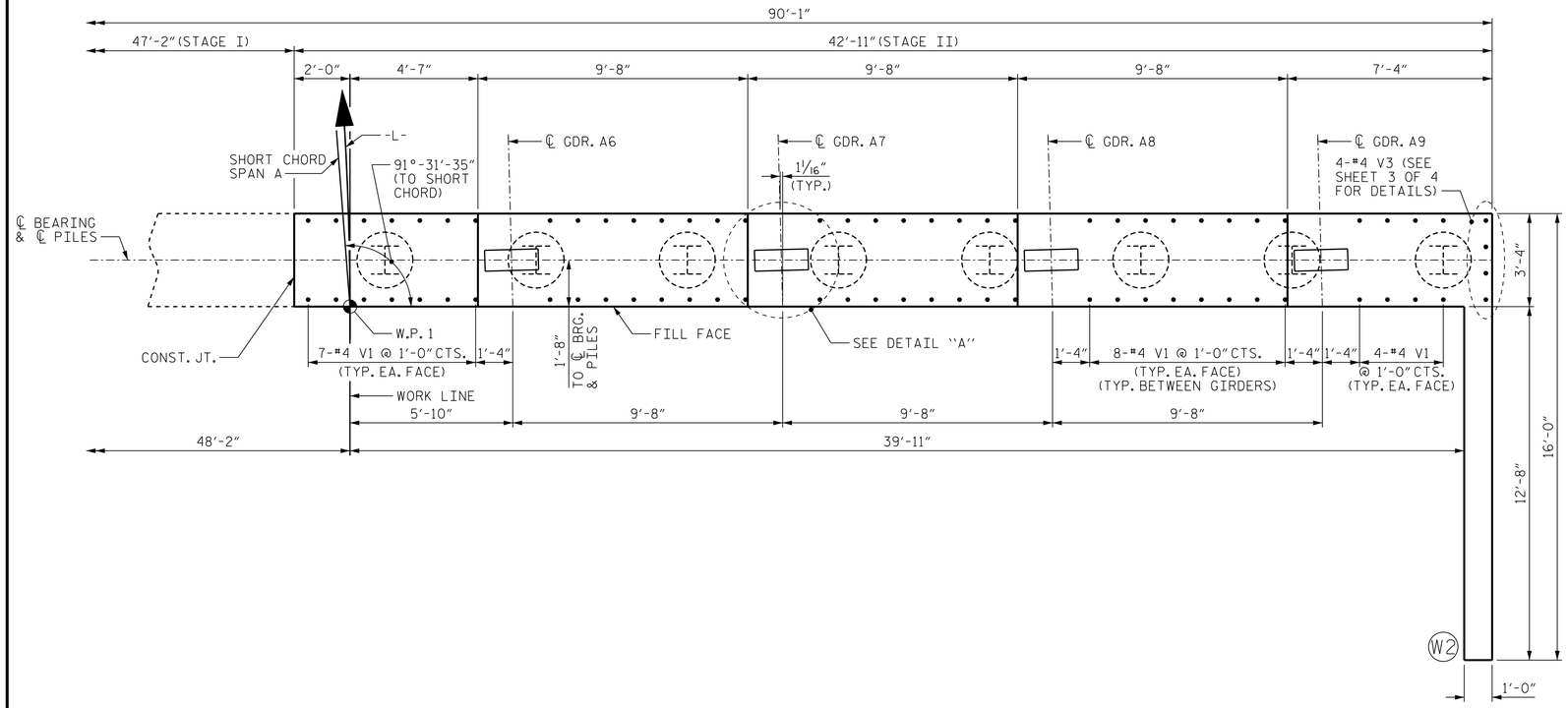

PLAN

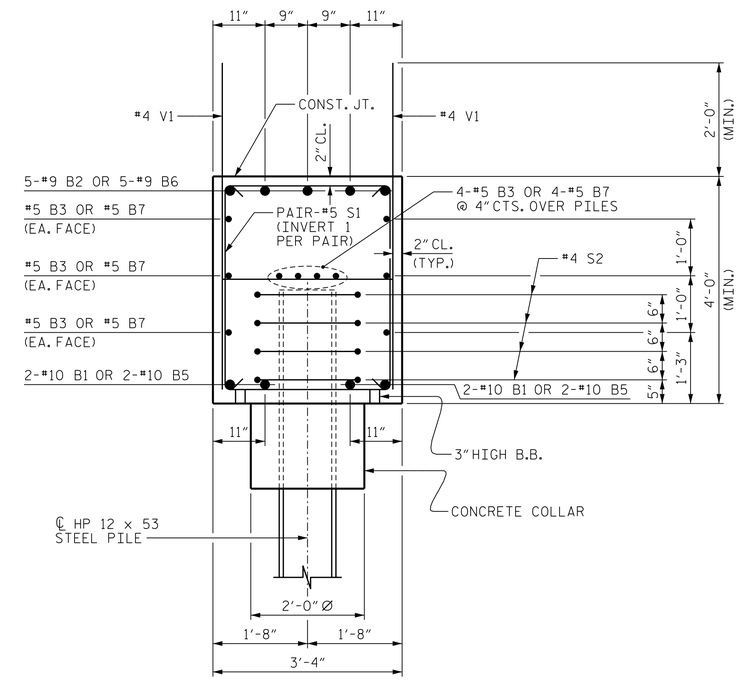

SECTION A-A

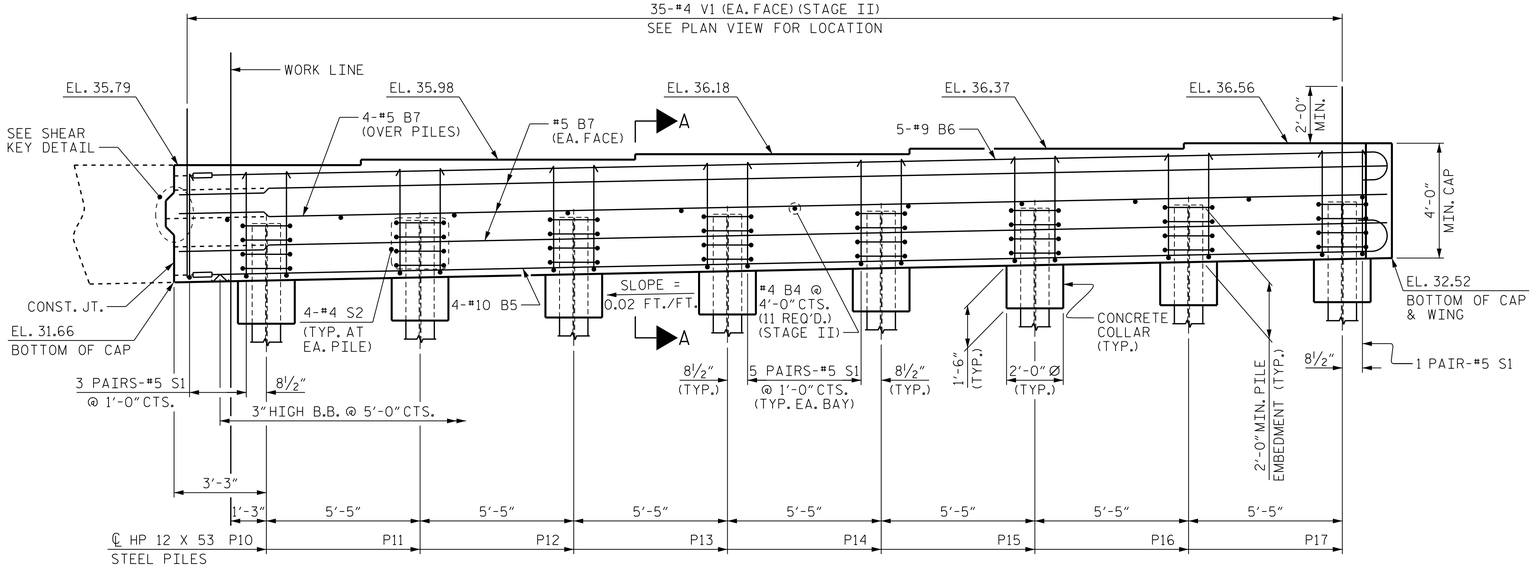

ELEVATION

TOP OF PILE ELEVATIONS	
PILE	ELEVATION
P10	33.73
P11	33.84
P12	33.95
P13	34.06
P14	34.17
P15	34.28
P16	34.38
P17	34.49

PROJECT NO. B-4565

LENOIR COUNTY

STATION: 29+57.00 -L-

SHEET 2 OF 4

STATE OF NORTH CAROLINA
DEPARTMENT OF TRANSPORTATION
RALEIGH

SUBSTRUCTURE

INTEGRAL END BENT 1 STAGE II

NORTH CAROLINA PROFESSIONAL SEAL 041543 ENGINEER GREGORY R. COLS

11/13/2014

MI ENGINEERING
1011 SCHAUB DRIVE, SUITE 100
RALEIGH, NC 27606
(919) 851-6606
FIRM PE NUMBER : P-0671

REVISIONS						SHEET NO.
NO.	BY:	DATE:	NO.	BY:	DATE:	S-99
1			3			TOTAL SHEETS
2			4			118

DRAWN BY : B.E. LANNING DATE : 09/14
CHECKED BY : G.R. COLS DATE : 09/14
DESIGN ENGINEER OF RECORD : G.R. COLS DATE : 10/14

11/13/2014
1:15:14 PM
User: blanning
Filename: P:\NC Bridges\MI4001.01 - B-4565 Lenoir\Site 2\Structures\402.190.S02.B4565.SMU.E102.dgn