DocuSign Envelope ID: 43467A26-D9CD-406C-A40D-9CBBA3C28539

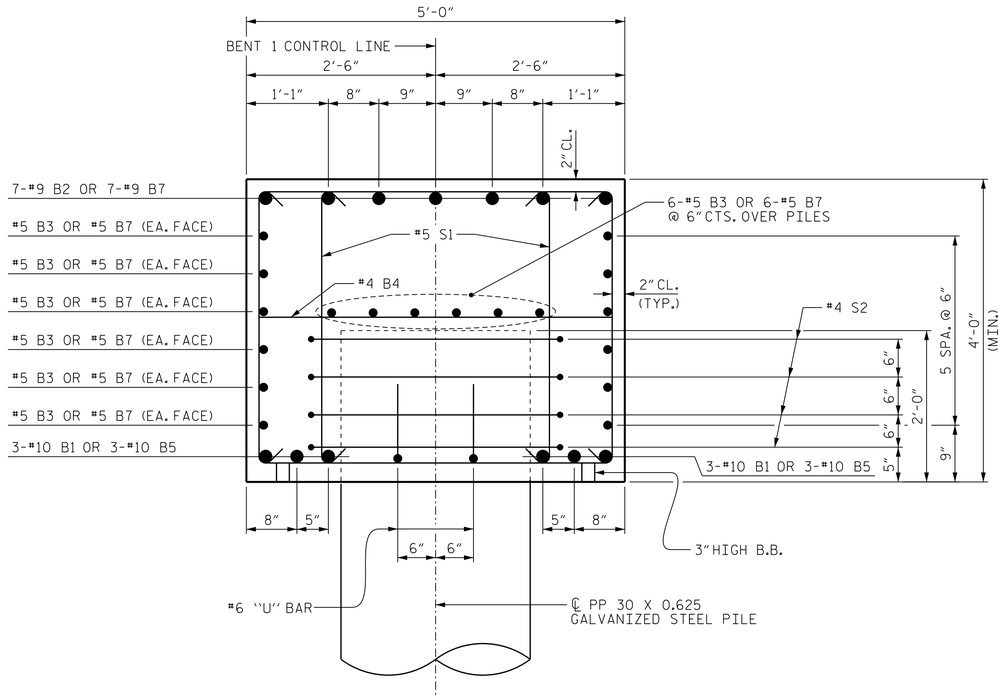

SECTION A-A

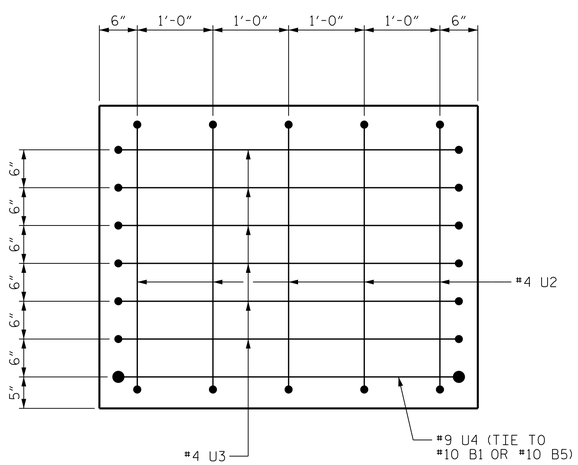

VIEW B-B

BAR TYPES

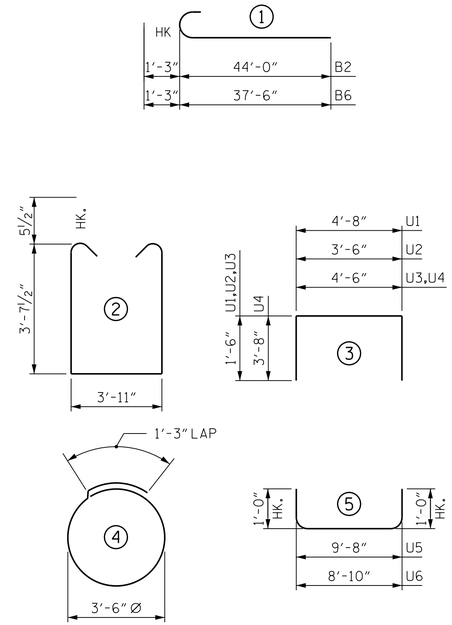

ALL BAR DIMENSIONS ARE OUT TO OUT.

BILL OF MATERIAL

BENT 1

STAGE I

BAR	NO.	SIZE	TYPE	LENGTH	WEIGHT
B1	6	#10	STR	44'-0"	1136
B2	7	#9	1	45'-3"	1077
B3	18	#5	STR	47'-2"	886
B4	11	#4	STR	4'-8"	34
S1	96	#5	2	12'-1"	1210
S2	16	#4	4	12'-3"	131
U1	40	#4	3	7'-8"	205
U2	5	#4	3	6'-6"	22
U3	6	#4	3	7'-6"	30
U4	1	#9	3	11'-10"	40
U5	6	#6	5	11'-8"	105

REINFORCING STEEL 4876 LBS.

CLASS A CONCRETE 31.3 C.Y.

PP 30 X 0.625 GALVANIZED STEEL PILES NO. 4 220 LIN. FT.

STEEL PILE POINTS 4 EA.

STAGE II

BAR	NO.	SIZE	TYPE	LENGTH	WEIGHT
B4	10	#4	STR	4'-8"	31
B5	6	#10	STR	37'-6"	968
B6	7	#9	1	38'-9"	922
B7	18	#5	STR	38'-4"	720
S1	90	#5	2	12'-1"	1134
S2	12	#4	4	12'-3"	98
U1	32	#4	3	7'-8"	164
U2	5	#4	3	6'-6"	22
U3	6	#4	3	7'-6"	30
U4	1	#9	3	11'-10"	40
U5	4	#6	5	11'-8"	70
U6	2	#6	5	10'-10"	33

REINFORCING STEEL 4199 LBS.

CLASS A CONCRETE 28.2 C.Y.

PP 30 X 0.625 GALVANIZED STEEL PILES NO. 3 165 LIN. FT.

STEEL PILE POINTS 3 EA.

TOTAL QUANTITIES

REINFORCING STEEL		9075 LBS.
CLASS A CONCRETE		59.5 C.Y.
PP 30 X 0.625 GALVANIZED STEEL PILES	NO. 7	385 LIN. FT.
PILE REDRIVES		4 EA.
STEEL PILE POINTS		7 EA.

THE CONCRETE DISPLACED BY THE FILLED GALVANIZED STEEL PIPE PILES HAS BEEN DEDUCTED FROM THE QUANTITY OF CLASS A CONCRETE FOR THE BENT CAP.

PROJECT NO. B-4565

LENOIR COUNTY

STATION: 29+57.00 -L-

SHEET 3 OF 3

STATE OF NORTH CAROLINA
DEPARTMENT OF TRANSPORTATION
RALEIGH

SUBSTRUCTURE

BENT 1

NORTH CAROLINA PROFESSIONAL SEAL 040343 ENGINEER GREGORY R. COLS

11/13/2014

MI ENGINEERING
1011 SCHAUB DRIVE, SUITE 100
RALEIGH, NC 27606
(919) 851-6606
FIRM PE NUMBER : P-0671

REVISIONS						
NO.	BY:	DATE:	NO.	BY:	DATE:	
1			3			
2			4			

SHEET NO. S-104

TOTAL SHEETS 118

DRAWN BY : B.E. LANNING DATE : 09/14
CHECKED BY : G.R. COLS DATE : 09/14
DESIGN ENGINEER OF RECORD : G.R. COLS DATE : 10/14

11/13/2014
1:15:25 PM
User: blanning
Filename: P:\NC Bridges\M14001.01 - B-4565 Lenoir\Site 2\Structures\402_215_S02_B4565_SMU_BT103.dgn