DocuSign Envelope ID: 43467A26-D9CD-406C-A40D-9CBBA3C28539

NOTES

STIRRUPS AND "U" BARS IN CAP MAY BE SHIFTED AS NECESSARY TO CLEAR ANCHOR BOLTS.

FOR SECTION A-A AND VIEW B-B. SEE SHEET 3 OF 3.

FOR STEEL PILE DETAILS AND REINFORCEMENT, SEE "30" STEEL PIPE PILE" SHEET.

GALVANIZE THE FULL LENGTH OF EACH INTERIOR BENT PILE. GALVANIZE IN ACCORDANCE WITH SECTION 1076 OF THE STANDARD SPECIFICATIONS.

LONGITUDINAL STEEL SHALL BE CONTINUOUS THROUGH JOINT.

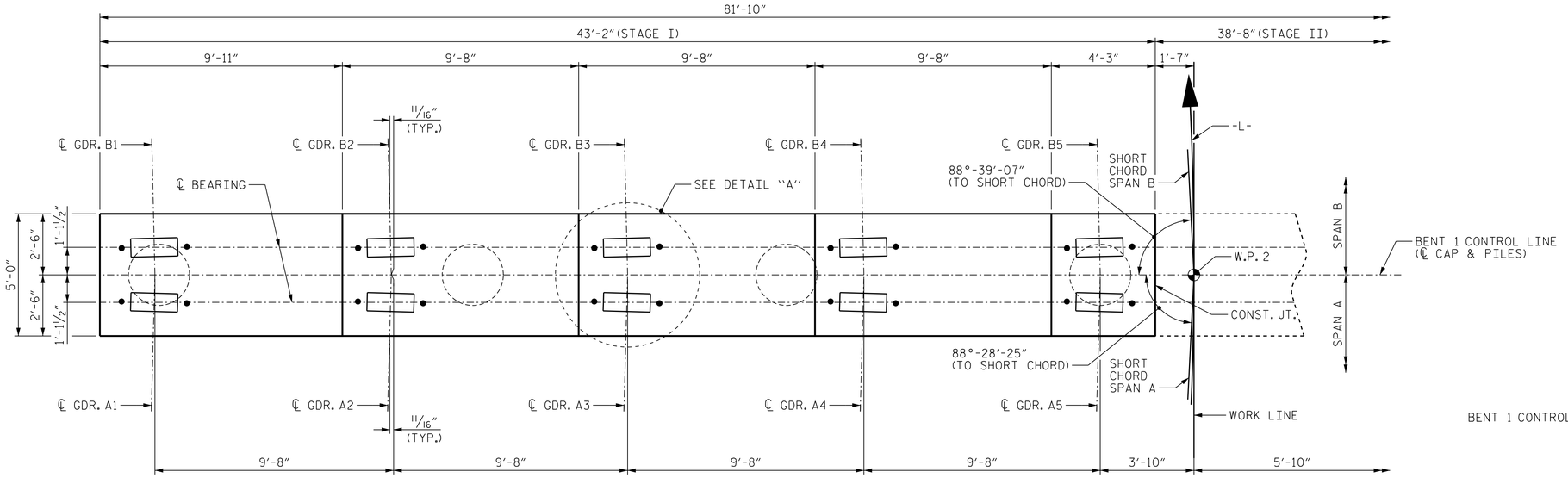

PLAN

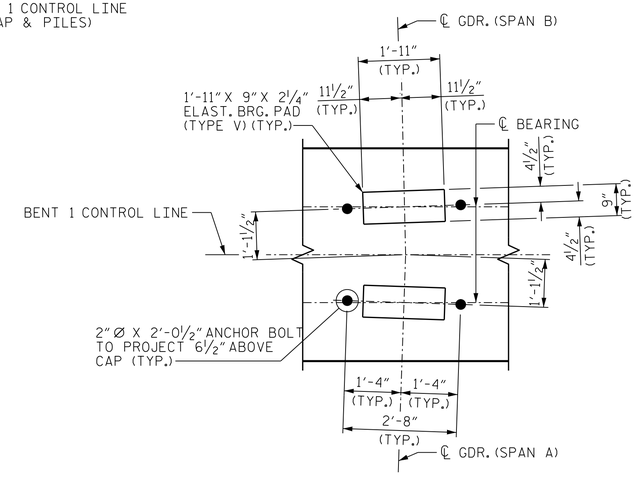

DETAIL "A"

(TYP. AT EACH BEARING)
(PIPE PILE NOT SHOWN)

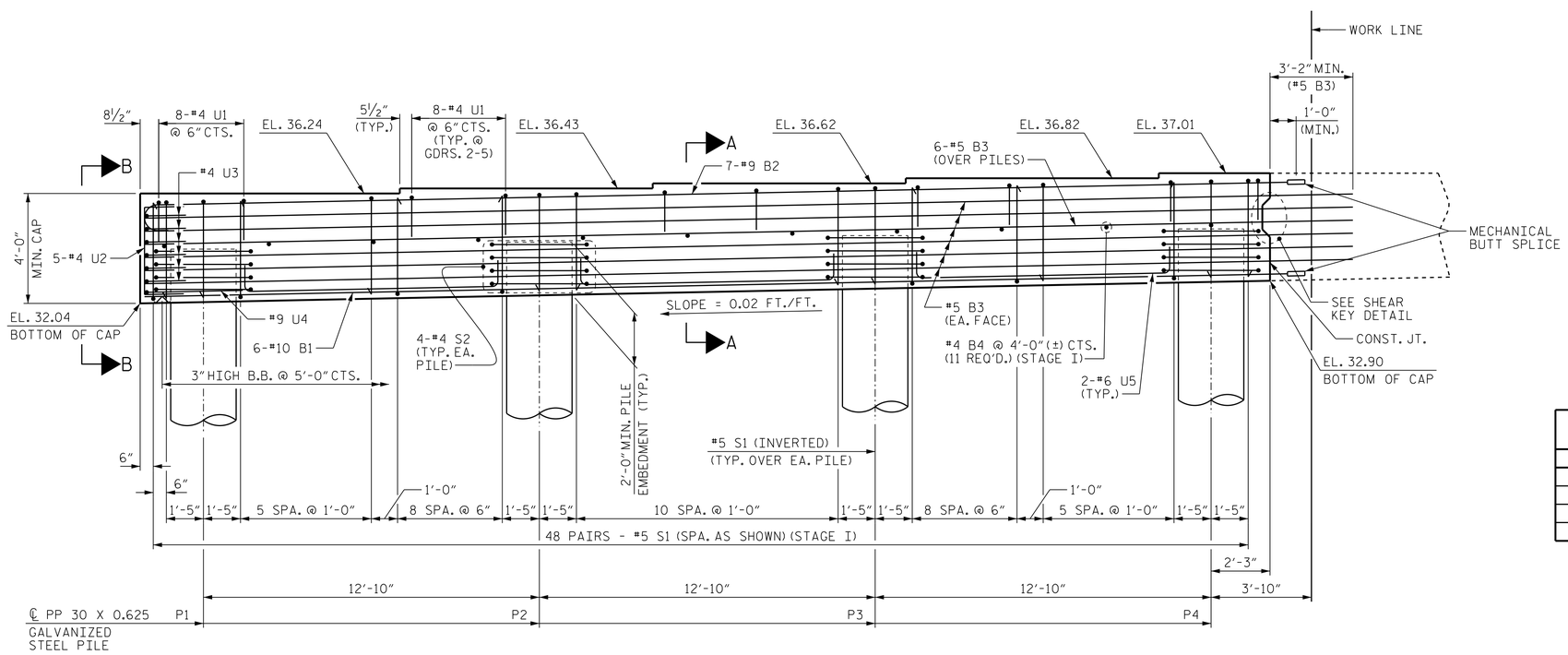

ELEVATION

NOTE: INVERT ALTERNATE PAIRS OF STIRRUPS

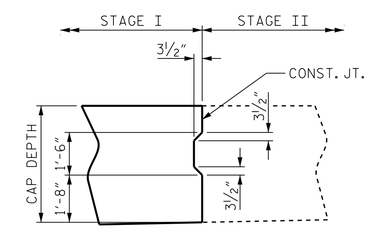

SHEAR KEY DETAIL

TOP OF PILE ELEVATIONS	
PILE	ELEVATION
P1	34.11
P2	34.37
P3	34.63
P4	34.88

PROJECT NO. B-4565

LENOIR COUNTY

STATION: 29+57.00 -L-

SHEET 1 OF 3

STATE OF NORTH CAROLINA
DEPARTMENT OF TRANSPORTATION
RALEIGH

SUBSTRUCTURE

BENT 1
STAGE I

NORTH CAROLINA PROFESSIONAL SEAL 041343 ENGINEER GREGORY R. COLS
11/13/2014

MI ENGINEERING
1011 SCHAUB DRIVE, SUITE 100
RALEIGH, NC 27606
(919) 851-6606
FIRM PE NUMBER : P-0671

REVISIONS						SHEET NO.
NO.	BY:	DATE:	NO.	BY:	DATE:	S-102
1			3			TOTAL SHEETS
2			4			118

DRAWN BY : B.E. LANNING DATE : 09/14
CHECKED BY : G.R. COLS DATE : 09/14
DESIGN ENGINEER OF RECORD : G.R. COLS DATE : 10/14

11/13/2014
1:15:20 PM
User: blanning
Filename: P:\NC Bridges\MI4001.01 - B-4565 Lenoir\Site 2\Structures\402_205_S02_B4565_SMU_BT101.dgn