DocuSign Envelope ID: 43467A26-D9CD-406C-A40D-9CBBA3C28539

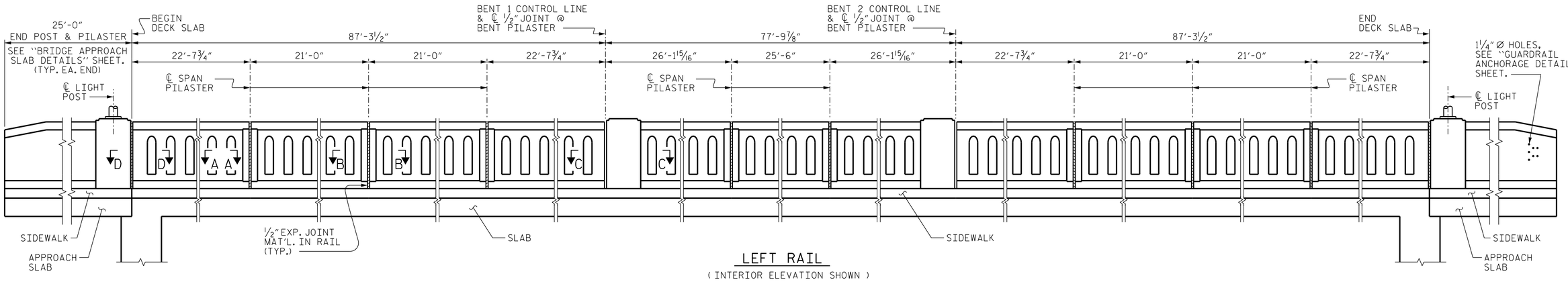

LEFT RAIL

(INTERIOR ELEVATION SHOWN)

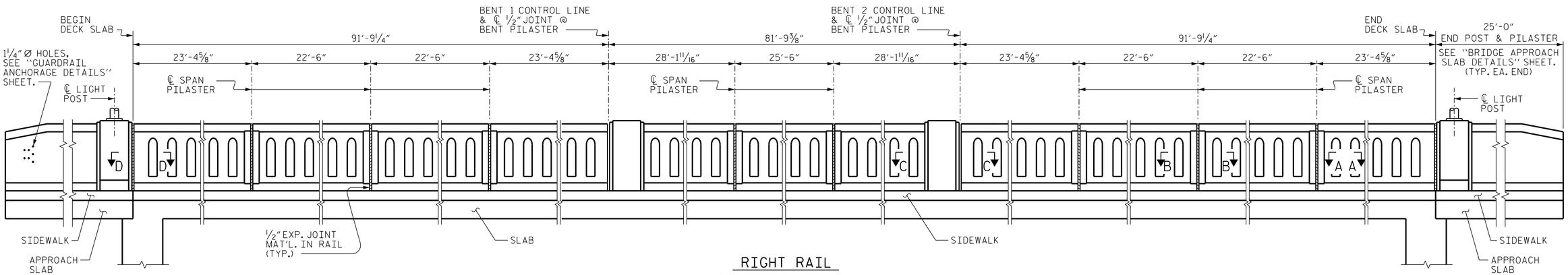

RIGHT RAIL

(EXTERIOR ELEVATION SHOWN)

ROADWAY ELEVATION OF RAIL

(DIMENSIONS SHOWN ARE ALONG THE OUTSIDE EDGE OF DECK)

(CHAMFER NOT SHOWN FOR CLARITY)

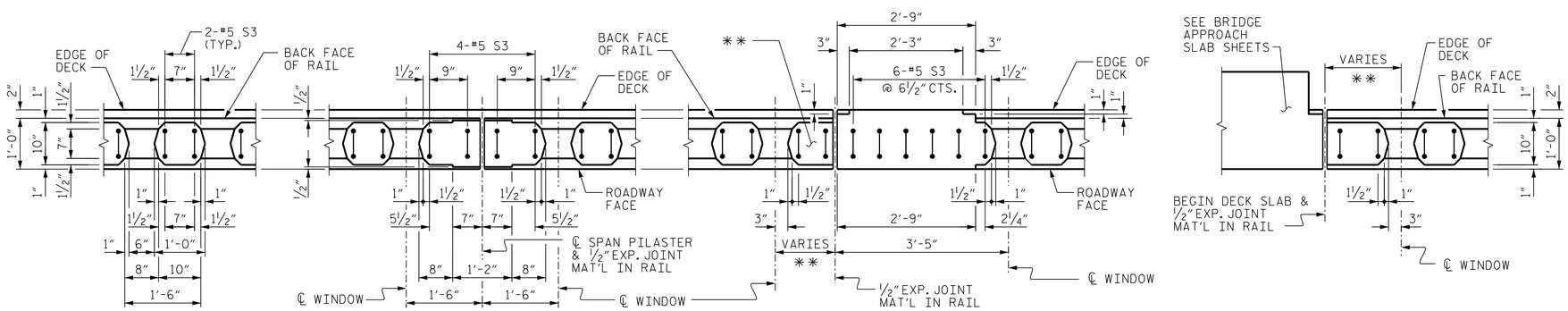

SECTION A-A

(SHOWING WINDOW DETAIL)

SECTION B-B

(SHOWING SPAN PILASTER)

SECTION C-C

(SHOWING BENT PILASTER)

SECTION D-D

(END DECK SLAB SIMILAR BY ROTATION)

PARTIAL PLANS

(LEFT SIDE SHOWN, RIGHT SIDE SIMILAR)

FOR ELEVATION DETAILS, SEE SHEET 5 OF 5.

** FOR VARIABLE DIMENSIONS, SEE REINFORCING PLACEMENT DETAILS SHEETS.

PROJECT NO. B-4565

LENOIR COUNTY

STATION: 29+57.00 -L-

SHEET 1 OF 5

STATE OF NORTH CAROLINA
DEPARTMENT OF TRANSPORTATION
RALEIGH

SUPERSTRUCTURE

CLASSIC CONCRETE BRIDGE RAIL WITH SIDEWALK

NORTH CAROLINA PROFESSIONAL SEAL 041543 ENGINEER GREGORY R. COLS
11/13/2014

MI ENGINEERING
1011 SCHAUB DRIVE, SUITE 100
RALEIGH, NC 27606
(919) 851-6606
FIRM PE NUMBER : P-0671

REVISIONS								SHEET NO.
NO.	BY:	DATE:	NO.	BY:	DATE:			S-89
1			3					TOTAL SHEETS
2			4					118

DRAWN BY :	B.E. ATKINSON	DATE :	07/14
CHECKED BY :	G.R. COLS	DATE :	09/14
DESIGN ENGINEER OF RECORD :	G.R. COLS	DATE :	10/14

11/13/2014
1:14:55 PM
User: blanning
Filename: P:\NC Bridges\MI4001.01 - B-4565 Lenoir\Site 2\Structures\402_145_S02_B4565_SMU_CCR01.dgn