DocuSign Envelope ID: A67ABEF4-0DAE-48C7-97EB-263367BB90D4

NOTES

STIRRUPS AND "U" BARS IN CAP MAY BE SHIFTED AS NECESSARY TO CLEAR ANCHOR BOLTS.

FOR SECTION A-A AND VIEW B-B, SEE SHEET 2 OF 2.

FOR STEEL PILE DETAILS AND REINFORCEMENT, SEE "36" STEEL PIPE PILE" SHEET.

GALVANIZE THE FULL LENGTH OF EACH INTERIOR BENT PILE. GALVANIZE IN ACCORDANCE WITH SECTION 1076 OF THE STANDARD SPECIFICATIONS.

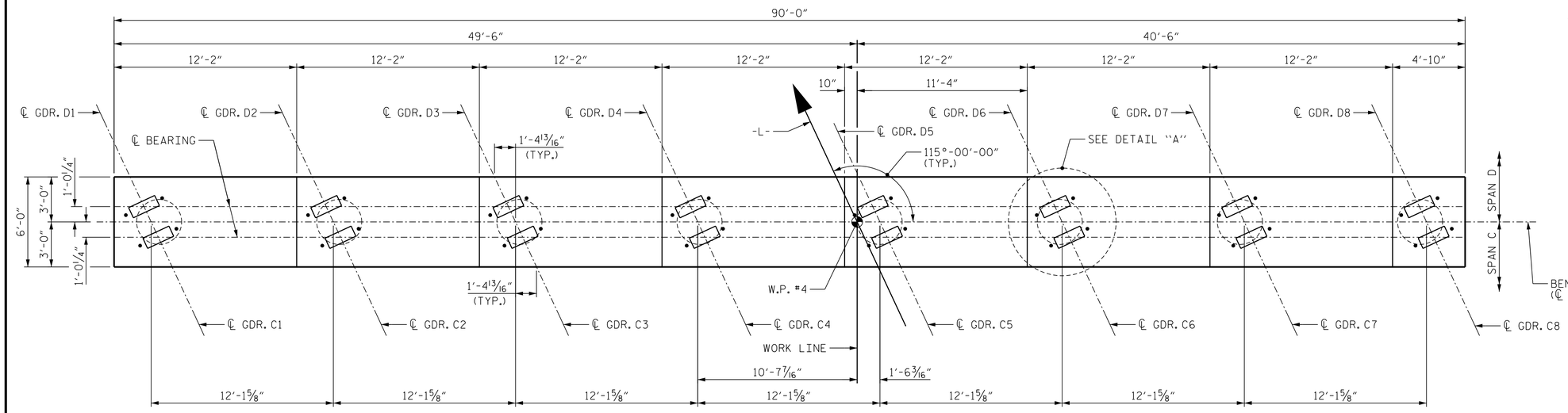

PLAN

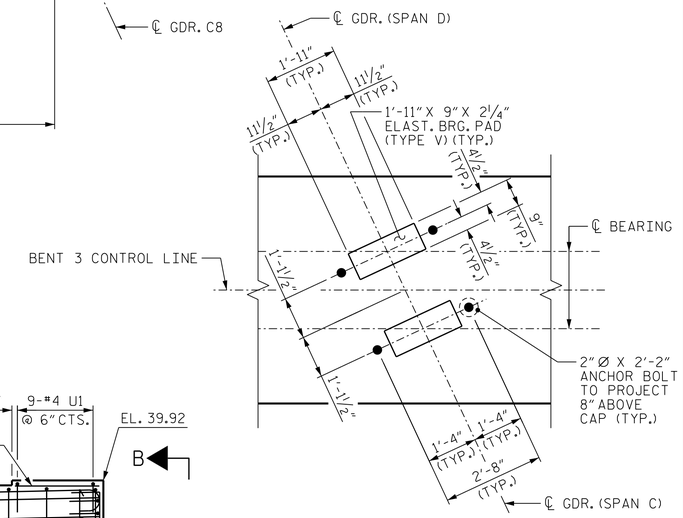

DETAIL "A"

(TYP. EA. BEARING)
(STEEL PILE NOT SHOWN)

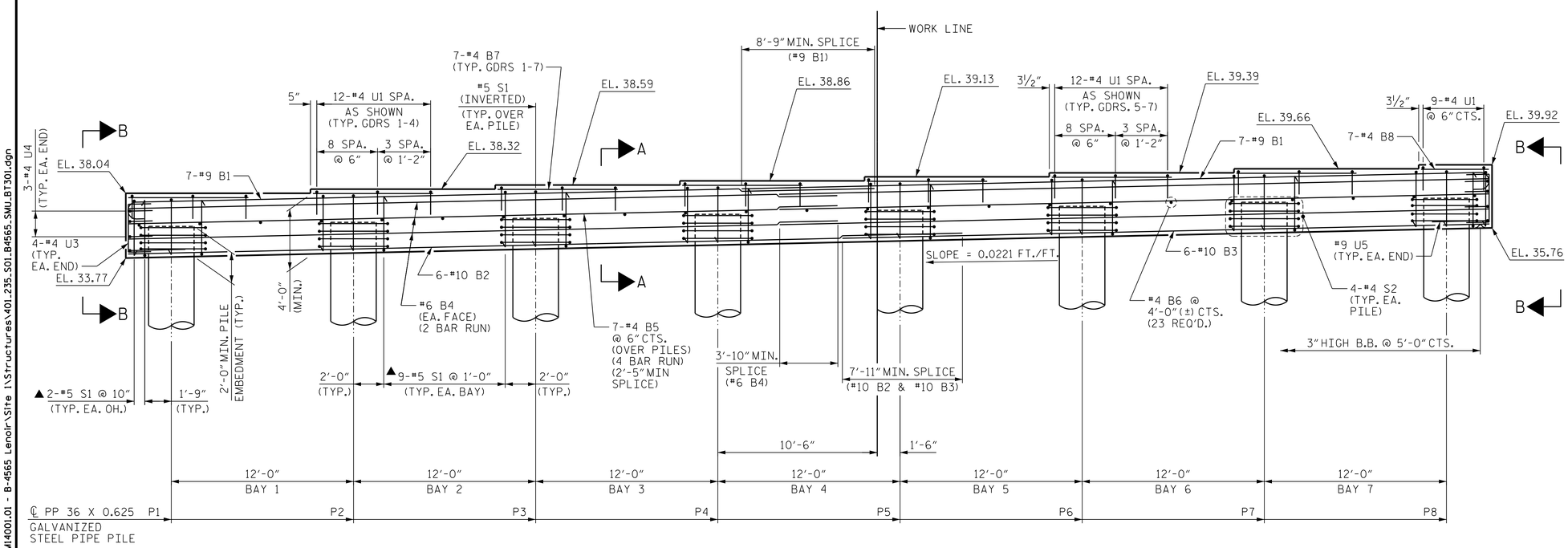

ELEVATION

▲ INVERT ALTERNATE STIRRUPS

TOP OF PILE ELEVATIONS			
PILE	ELEVATION	PILE	ELEVATION
P1	35.87	P5	36.93
P2	36.14	P6	37.20
P3	36.40	P7	37.46
P4	36.67	P8	37.73

NORTH CAROLINA PROFESSIONAL SEAL 027799 ENGINEER ALLYSON K. ORR
11/13/2014

PROJECT NO. B-4565
LENOIR COUNTY
STATION: 20+17.50 -L-

SHEET 1 OF 2

STATE OF NORTH CAROLINA
DEPARTMENT OF TRANSPORTATION
RALEIGH

SUBSTRUCTURE

BENT 3

MI ENGINEERING
1011 SCHAUB DRIVE, SUITE 100
RALEIGH, NC 27606
(919) 851-6606
FIRM PE NUMBER : P-0671

REVISIONS							
NO.	BY:	DATE:	NO.	BY:	DATE:	SHEET NO.	S-48
1			3			TOTAL SHEETS	118
2			4				

DRAWN BY :	J.S. ISRAELNAIM	DATE :	09/14
CHECKED BY :	G.R. COLS	DATE :	09/14
DESIGN ENGINEER OF RECORD :	P.A. de PAOLI	DATE :	10/14

11/13/2014
1:22:31 PM
User: blanning
Filename: P:\NC Bridges\MI4001.01 - B-4565 Lenoir\Site 1\Structures\401_235_501_B4565_SMU_BT301.dgn