DocuSign Envelope ID: A67ABEF4-0DAE-48C7-97EB-263367BB90D4

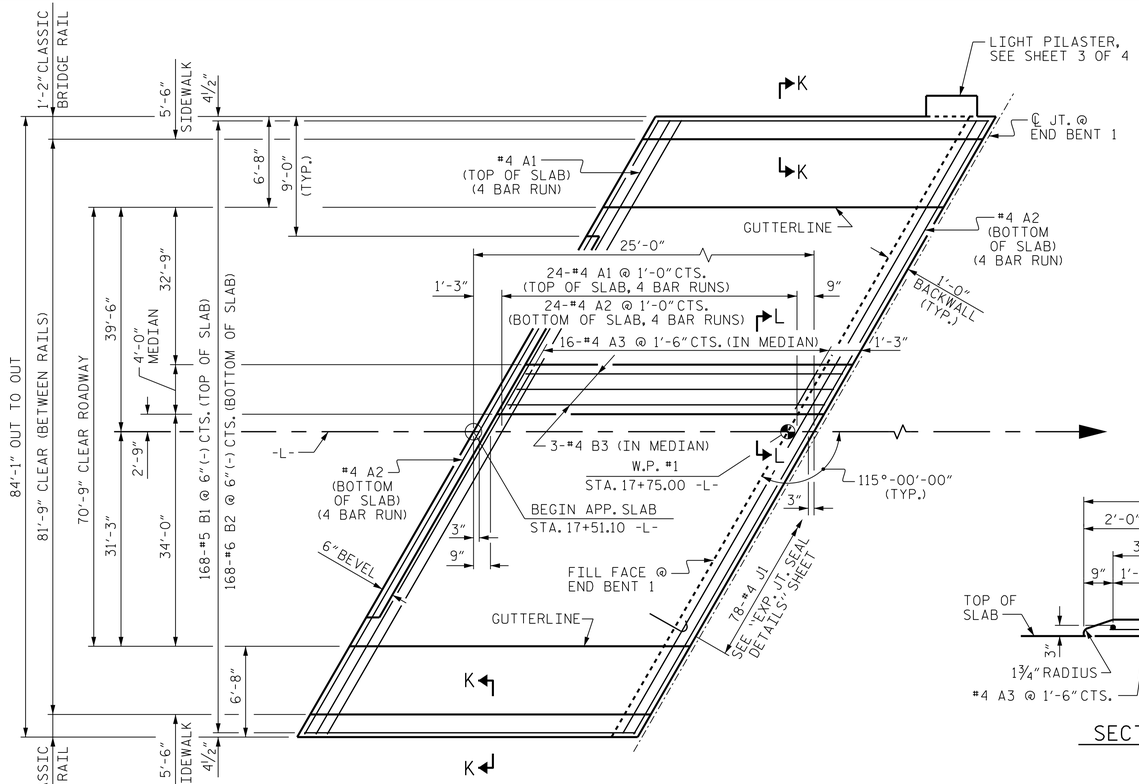

PLAN @ END BENT 1

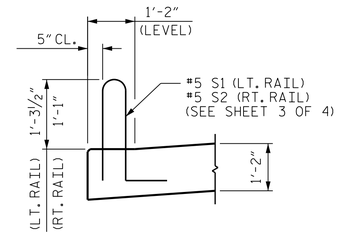

SECTION K-K

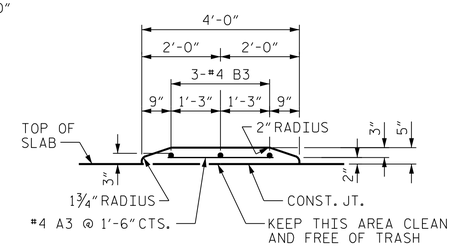

SECTION L-L

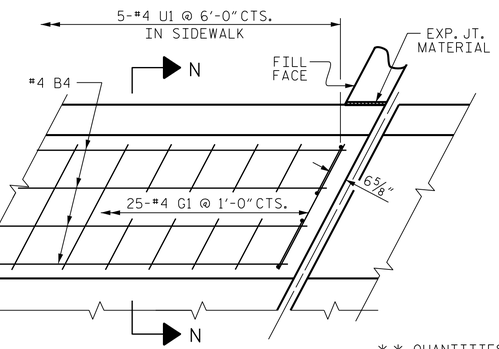

PLAN

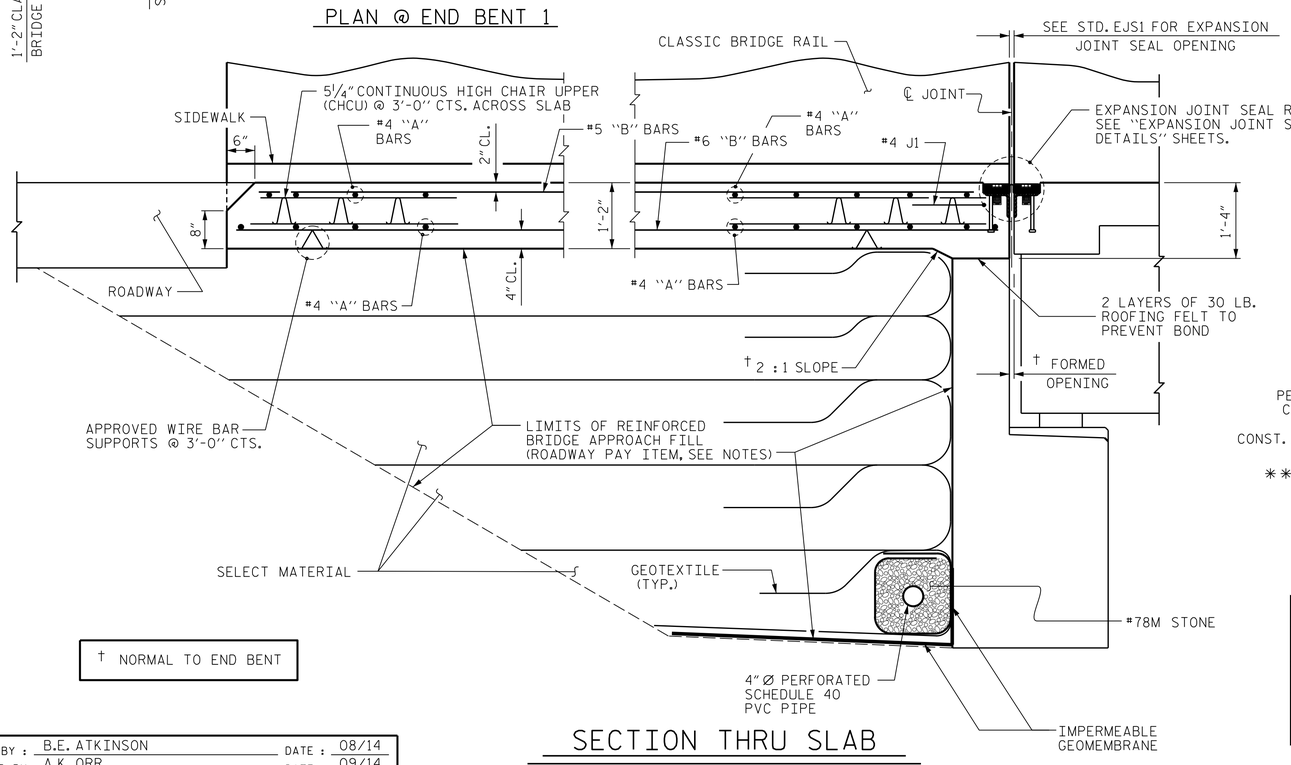

† NORMAL TO END BENT

SECTION THRU SLAB

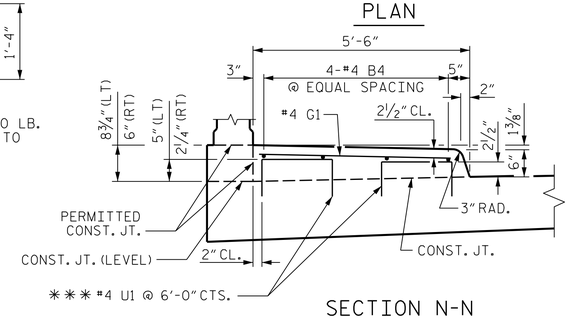

SECTION N-N

DETAILS OF SIDEWALK ON APPROACH SLAB

*** #4 U1 BARS MAY BE PUSHED INTO GREEN CONCRETE AFTER APPROACH SLAB HAS BEEN SCREEDED OFF.

NOTES

APPROACH SLAB SHALL NOT BE CONSTRUCTED PRIOR TO COMPLETION OF THE BRIDGE DECK.

FOR REINFORCED BRIDGE APPROACH FILL FABRIC WALL INCLUDING GEOTEXTILE, IMPERMEABLE GEOMEMBRANE, 4" Ø DRAINAGE PIPE, #78M STONE, WELDED WIRE FORM, AND SELECT MATERIAL, SEE ROADWAY PLANS.

AREA BETWEEN THE WINGWALL AND APPROACH SLAB SHALL BE GRADED TO DRAIN THE WATER AWAY FROM THE FILL FACE OF THE BRIDGE AND SHALL BE PAVED. SEE ROADWAY PLANS.

FOR EXPANSION JOINT SEALS, SEE SPECIAL PROVISIONS.

GROOVED CONTRACTION JOINTS ½" IN DEPTH, SHALL BE TOOLED IN ALL EXPOSED FACES OF SIDEWALK AND CONCRETE MEDIAN IN ACCORDANCE WITH ARTICLE 825-10(B) OF THE STANDARD SPECIFICATIONS. THE CONTRACTION JOINTS SHALL BE LOCATED AT A SPACING OF 8 FEET TO 10 FEET.

THE SIDEWALK AND CONCRETE MEDIAN SHALL NOT BE CAST UNTIL ALL SLAB CONCRETE IN THE APPROACH SLAB HAS BEEN CAST AND HAS REACHED A MINIMUM COMPRESSIVE STRENGTH OF 3000 PSI.

SIDEWALK AND CONCRETE MEDIAN ON THE APPROACH SLAB SHALL BE INCLUDED IN THE LUMP SUM CONTRACT PRICE BID FOR "BRIDGE APPROACH SLAB".

ALL REINFORCING STEEL IN SIDEWALK AND CONCRETE MEDIAN SHALL BE EPOXY COATED.

SEE "SUPERSTRUCTURE CONCRETE MEDIAN DETAILS" FOR DETAILS OF CONCRETE MEDIAN AT EXPANSION JOINT SEAL.

SEE "STANDARD EXPANSION JOINT SEAL DETAIL" SHEETS FOR SIDEWALK AND COVER PLATE DETAILS AT EXPANSION JOINT SEAL.

BILL OF MATERIAL

APPROACH SLAB AT EB 1

STAGE I

BAR	NO.	SIZE	TYPE	LENGTH	WEIGHT
* A1	100	#4	STR	24'-8"	1648
A2	104	#4	STR	24'-5"	1696
* A3	16	#4	STR	2'-11"	31
* B1	168	#5	STR	23'-7"	4132
B2	168	#6	STR	24'-6"	6182
* B3	3	#4	STR	23'-8"	47
* J1	78	#4	2	1'-5"	74
* U1	20	#4	1	3'-2"	42
REINFORCING STEEL				LBS.	7878
* EPOXY COATED REINFORCING STEEL				LBS.	5974
CLASS AA CONCRETE					
POUR 1 APPROACH SLAB				C.Y.	91.1
POUR 2 MEDIAN				C.Y.	1.5
TOTAL				C.Y.	92.6

STAGE II

BAR	NO.	SIZE	TYPE	LENGTH	WEIGHT
* B4	8	#4	STR	24'-2"	129
* G1	50	#4	STR	5'-6"	184
* EPOXY COATED REINFORCING STEEL				LBS.	313
CLASS AA CONCRETE				C.Y.	6.9

TOTAL QUANTITIES **

REINFORCING STEEL	LBS.	7878
* EPOXY COATED REINFORCING STEEL	LBS.	6287
CLASS AA CONCRETE	C.Y.	99.5

BAR TYPE

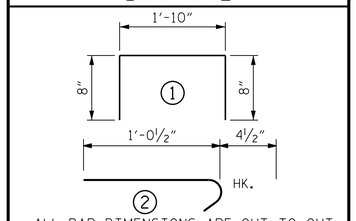

ALL BAR DIMENSIONS ARE OUT TO OUT.

** QUANTITIES FOR CLASSIC BRIDGE RAIL ARE NOT INCLUDED. SEE SHEET 3 OF 4.

CONCRETE QUANTITY FOR SIDEWALK INCLUDES VOLUME UNDER RAIL.

THE QUANTITY OF #4 J1 BARS ON THE BILL OF MATERIAL IS BASED ON 1'-0" CENTERS. J1 BARS SHALL BE PLACED AT EACH VERTICAL STUD ANCHOR BOLT. IN THE EVENT THAT THE NUMBER OF VERTICAL STUD ANCHORS EXCEEDS THE NUMBER OF J1 BARS SPECIFIED, ADDITIONAL J1 BARS WILL NOT BE REQUIRED.

SPLICE LENGTHS

BAR SIZE	EPOXY COATED	UNCOATED
#4	2'-0"	1'-9"
#5	2'-6"	2'-2"
#6	3'-10"	2'-7"

PROJECT NO. B-4565

LENOIR COUNTY

STATION: 20+17.50 -L-

SHEET 1 OF 4

STATE OF NORTH CAROLINA
DEPARTMENT OF TRANSPORTATION
RALEIGH

BRIDGE APPROACH SLAB FOR FLEXIBLE PAVEMENT

NORTH CAROLINA PROFESSIONAL SEAL 027799 ENGINEER ALLYSON K. ORR
11/13/2014

MI ENGINEERING
1011 SCHAUB DRIVE, SUITE 100
RALEIGH, NC 27606
(919) 851-6606
FIRM PE NUMBER : P-0671

REVISIONS							
NO.	BY:	DATE:	NO.	BY:	DATE:	SHEET NO.	S-56
1			3			TOTAL SHEETS	118
2			4				

DRAWN BY : B.E. ATKINSON DATE : 08/14
CHECKED BY : A.K. ORR DATE : 09/14
DESIGN ENGINEER OF RECORD : A.K. ORR DATE : 10/14

11/13/2014
1:22:48 PM
User: planning
Filename: P:\NC Bridges\M14001.01 - B-4565 Lenoir\Site 1\Structures\401_275_S01_B4565_SMU_BA501.dgn