DocuSign Envelope ID: A67ABEF4-0DAE-48C7-97EB-263367BB90D4

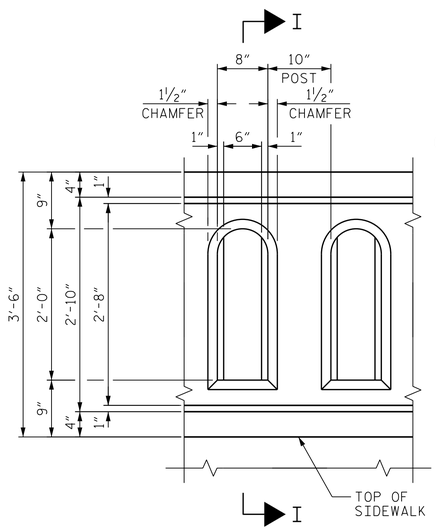

WINDOW DETAIL

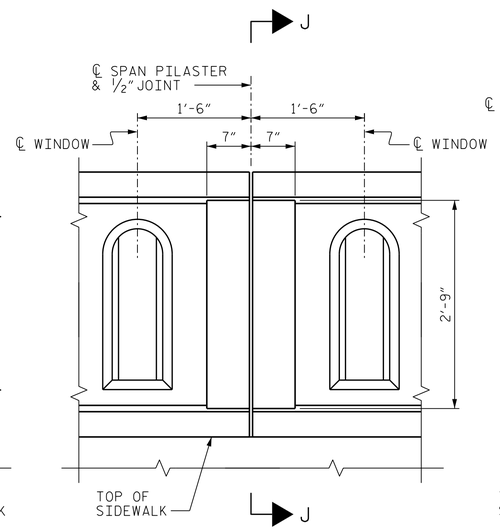

SPAN PILASTER

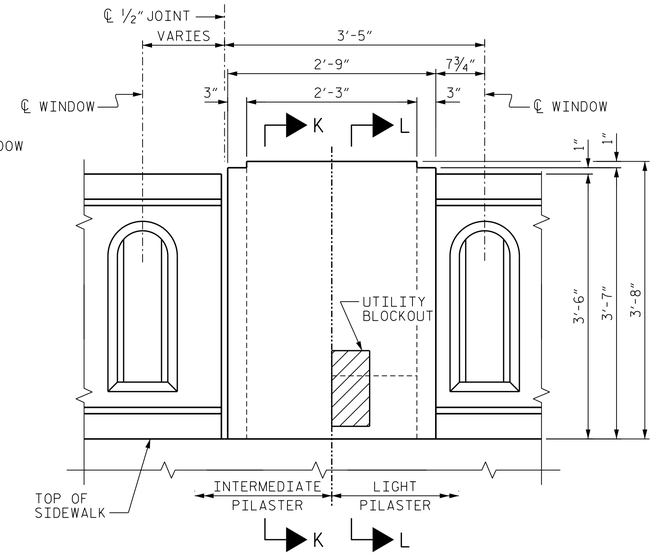

INTERMEDIATE & LIGHT PILASTER

(INTERIOR ELEVATION SHOWN)

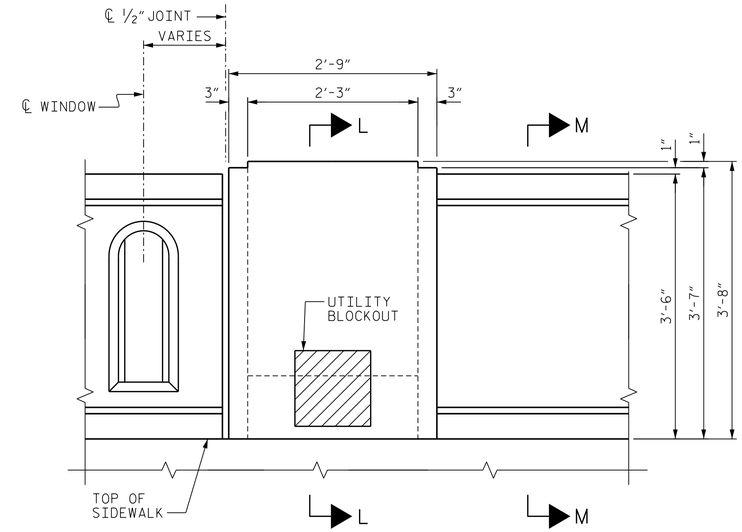

END LIGHT PILASTER

(INTERIOR ELEVATION SHOWN)

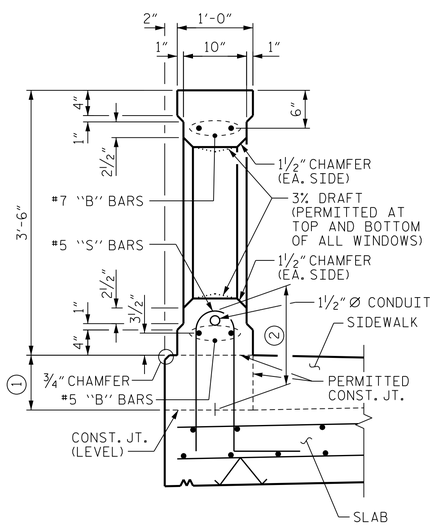

SECTION I-I

(SHOWING WINDOW OF RAIL)

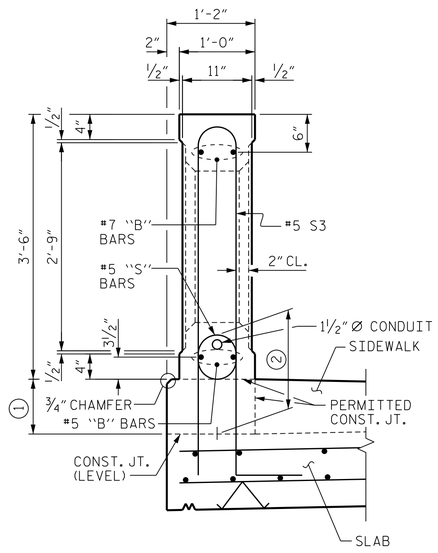

SECTION J-J

(SHOWING SPAN PILASTER)

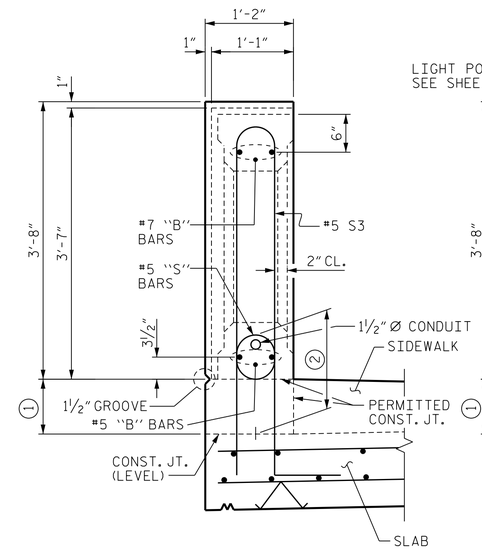

SECTION K-K

(SHOWING INTERMEDIATE PILASTER)

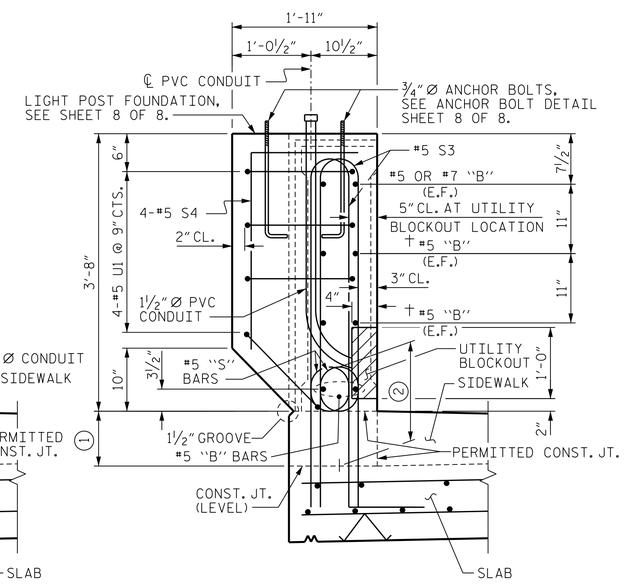

SECTION L-L

(SHOWING LIGHT PILASTER)

†END LIGHT PILASTER ONLY.

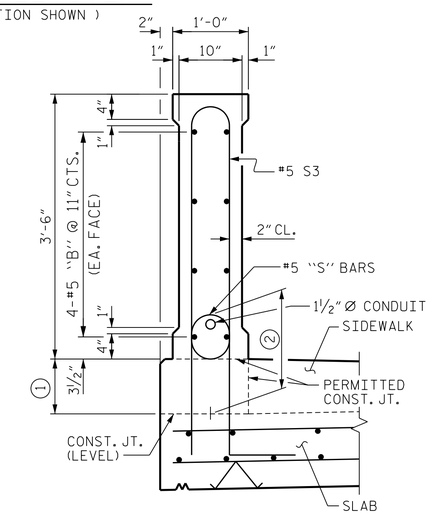

SECTION M-M

(SHOWING END RAIL)

①	8¾" LEFT SIDE 6" RIGHT SIDE
②	1'-3½" LEFT SIDE 1'-1" RIGHT SIDE

PROJECT NO. B-4565

LENOIR COUNTY

STATION: 20+17.50 -L-

SHEET 3 OF 8

STATE OF NORTH CAROLINA
DEPARTMENT OF TRANSPORTATION
RALEIGH

SUPERSTRUCTURE

CLASSIC CONCRETE BRIDGE RAIL WITH SIDEWALK

NORTH CAROLINA PROFESSIONAL SEAL 027799 ENGINEER ALLYSON K. ORR

11/13/2014

DRAWN BY :	B.E. ATKINSON	DATE :	07/14
CHECKED BY :	A.K. ORR	DATE :	09/14
DESIGN ENGINEER OF RECORD :	A.K. ORR	DATE :	10/14

MI ENGINEERING
1011 SCHAUB DRIVE, SUITE 100
RALEIGH, NC 27606
(919) 851-6606
FIRM PE NUMBER : P-0671

REVISIONS								SHEET NO.
NO.	BY:	DATE:	NO.	BY:	DATE:			S-27
1			3					TOTAL SHEETS
2			4					118

11/13/2014
1:21:48 PM
User: blanning
Filename: P:\NC Bridges\MI4001.01 - B-4565 Lenoir\Site 1\Structures\401_135_S01_B4565_SMU_CCR03.dgn