DocuSign Envelope ID: A67ABEF4-0DAE-48C7-97EB-263367BB90D4

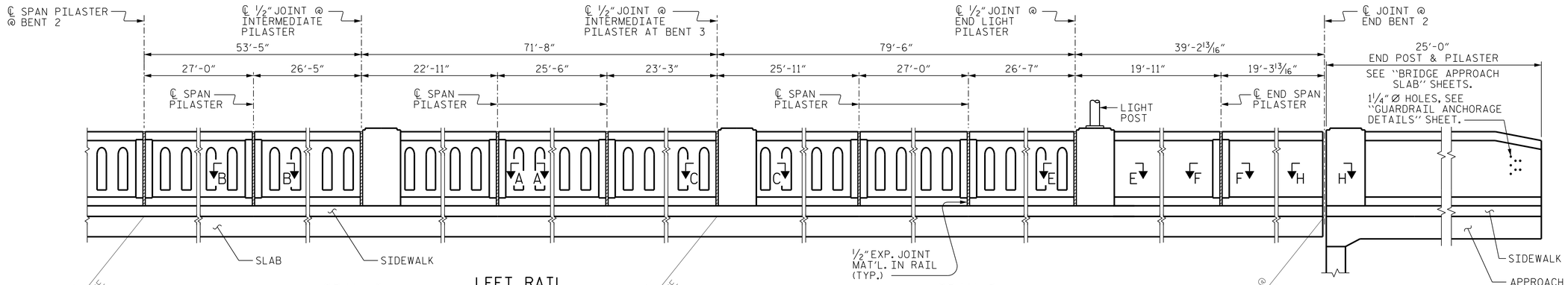

LEFT RAIL

(INTERIOR ELEVATION SHOWN)

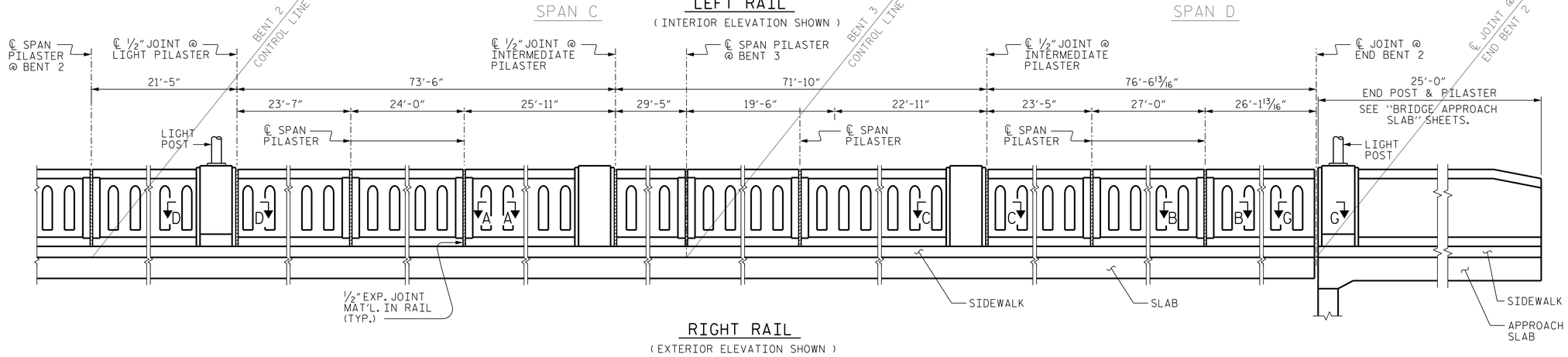

RIGHT RAIL

(EXTERIOR ELEVATION SHOWN)

ROADWAY ELEVATION OF RAIL

(DIMENSIONS SHOWN ARE ALONG THE BACK FACE OF RAIL)

(CHAMFER NOT SHOWN FOR CLARITY)

(FOR SECTIONS A-A, B-B, C-C & D-D, SEE SHEET 1 OF 8.)

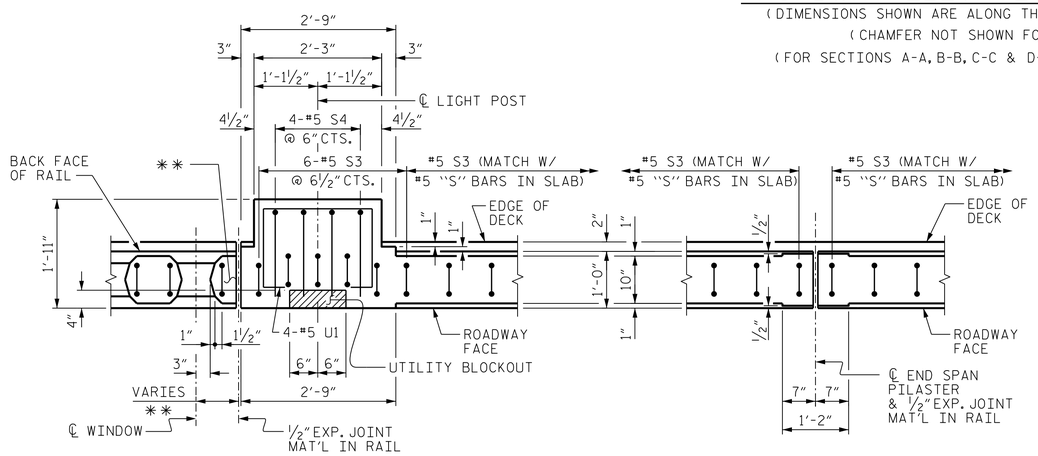

SECTION E-E

(SHOWING END LIGHT PILASTER)

SECTION F-F

(SHOWING END SPAN PILASTER)

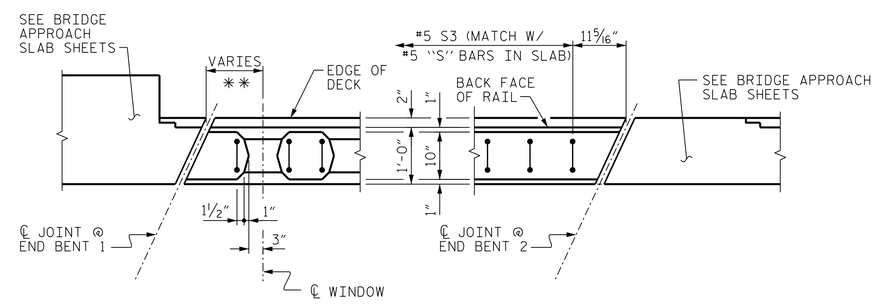

SECTION G-G

SECTION H-H

PARTIAL PLANS

(LEFT SIDE SHOWN, RIGHT SIDE SIMILAR)

** NUMBER OF BARS VARIES. FOR VARIABLE DIMENSIONS, SEE REINFORCING PLACEMENT DETAILS SHEETS.

PROJECT NO. B-4565

LENOIR COUNTY

STATION: 20+17.50 -L-

SHEET 2 OF 8

STATE OF NORTH CAROLINA
DEPARTMENT OF TRANSPORTATION
RALEIGH

SUPERSTRUCTURE

CLASSIC CONCRETE BRIDGE RAIL WITH SIDEWALK

NORTH CAROLINA PROFESSIONAL SEAL 027799 ENGINEER ALLYSON K. ORR
11/13/2014

DRAWN BY : B.E. ATKINSON	DATE : 07/14		
CHECKED BY : A.K. ORR	DATE : 08/14		
DESIGN ENGINEER OF RECORD : A.K. ORR	DATE : 10/14		

MI ENGINEERING
1011 SCHAUB DRIVE, SUITE 100
RALEIGH, NC 27606
(919) 851-6606
FIRM PE NUMBER : P-0671

REVISIONS						
NO.	BY:	DATE:	NO.	BY:	DATE:	SHEET NO. S-26
1			3			TOTAL SHEETS 118
2			4			

11/13/2014
1:21:46 PM
User: blanning
Filename: P:\NC Bridges\MI4001.01 - B-4565 Lenoir\Site 1\Structures\401_130_S01_B4565_SMU_CCR02.dgn