DocuSign Envelope ID: A67ABEF4-0DAE-48C7-97EB-263367BB90D4

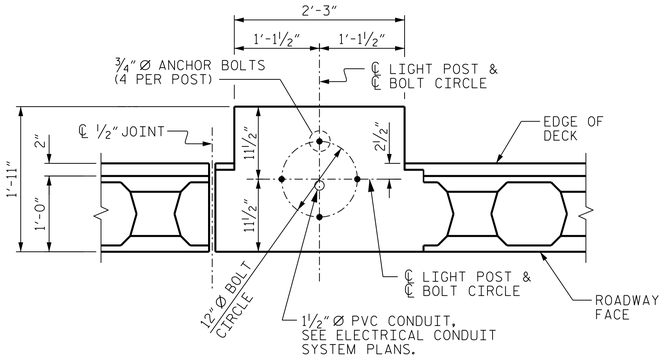

LIGHT POST FOUNDATION

REINFORCING STEEL NOT SHOWN FOR CLARITY.
LIGHT POSTS BY OTHERS.

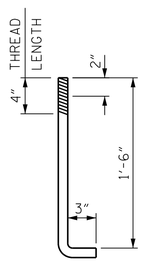

ANCHOR BOLT DETAIL

4 ANCHOR BOLTS, NUTS & WASHERS
PER LIGHT POST

LIGHT POST FOUNDATION NOTES

1. PROVIDE AND SET ANCHOR BOLTS FOR LIGHT POSTS AS SHOWN ON THE PLANS.
2. ANCHOR BOLTS SHALL CONFORM TO AASHTO M314 OR ASTM F1554 GRADE 55. NUTS AND WASHERS SHALL CONFORM TO AASHTO M314-90 OR ASTM F1554. ANCHOR BOLTS, NUTS AND WASHERS SHALL BE GALVANIZED IN ACCORDANCE WITH ASTM A153. SHOP DRAWINGS ARE REQUIRED. SHOP INSPECTION IS NOT REQUIRED.
3. PROVIDE A CLASS I SURFACE FINISH FOR ALL EXPOSED SURFACES.
4. PROVIDE AND SET ANCHOR BOLTS FOR LIGHT POSTS AS SHOWN ON THE PLANS.
5. PROVIDING AND INSTALLING LIGHT POSTS IS BY OTHERS AND NOT PART OF THIS WORK. BEFORE ORDERING AND INSTALLING ANCHOR BOLTS, THE CONTRACTOR SHALL COORDINATE WITH THE CITY OF KINSTON FOR CONSISTENCY OR CHANGES TO THE CITY'S PREFERRED LIGHT POST. THESE PLANS ARE PREPARED USING A HOLOPHANE NORTH YORKSHIRE LAMP POST WITH A 17" BASE DIAMETER AND A 12" DIAMETER BOLT CIRCLE.
6. ANCHOR BOLTS SHALL CONFORM TO AASHTO M314 OR ASTM F1554 GRADE 55. NUTS AND WASHERS SHALL CONFORM TO AASHTO M314-90 OR ASTM F1554. ANCHOR BOLTS, NUTS AND WASHERS SHALL BE GALVANIZED IN ACCORDANCE WITH ASTM A153. SHOP DRAWINGS ARE REQUIRED. SHOP INSPECTION IS NOT REQUIRED.
7. PLACE ANCHOR BOLTS IN ACCORDANCE WITH THE STANDARD SPECIFICATIONS. BEFORE CASTING CONCRETE, TURN NUT TO BOTTOM OF THREADS AND PLACE WASHER ON TOP OF NUT. SECURE WASHER WITH TACK WELD BETWEEN WASHER AND NUT. EMBED NUT AND WASHER IN CONCRETE.

NOTES

CLASSIC CONCRETE BRIDGE RAIL IN A CONTINUOUS UNIT SHALL NOT BE CAST UNTIL ALL SLAB CONCRETE IN THE UNIT HAS BEEN CAST AND HAS REACHED A MINIMUM COMPRESSIVE STRENGTH OF 3,000 PSI.

ALL REINFORCING STEEL IN CLASSIC CONCRETE BRIDGE RAIL SHALL BE EPOXY COATED.

ALL PARTS OF THE CLASSIC BARRIER RAILING INCLUDING BUT NOT LIMITED TO THE REINFORCING STEEL, CLASS AA CONCRETE, ANCHOR BOLTS AND INCIDENTALS SHALL BE INCLUDED IN THE UNIT PRICE BID PER LINEAR FOOT FOR "CLASSIC CONCRETE BRIDGE RAIL". NO SEPARATE MEASUREMENT OR PAYMENT WILL BE MADE FOR THESE ITEMS.

FOR CLASSIC CONCRETE BRIDGE RAIL, SEE SPECIAL PROVISIONS.

FOR ELECTRICAL CONDUIT DETAILS, SEE "ELECTRICAL CONDUIT SYSTEM" SHEET.

BAR TYPES

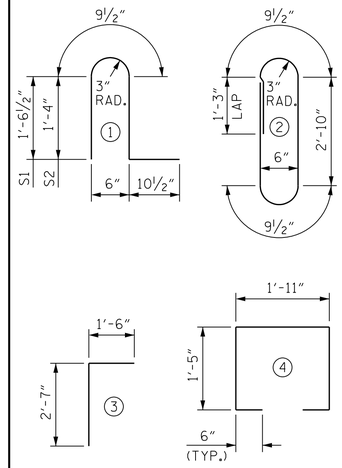

ALL BAR DIMENSIONS ARE OUT TO OUT.

BILL OF MATERIAL

FOR CLASSIC CONCRETE BRIDGE RAIL ONLY

STAGE I

BAR	NO.	SIZE	TYPE	LENGTH	WEIGHT
✳ S1	645	#5	1	4'-9"	3195
✳ S2	646	#5	1	4'-4"	2920
✳ EPOXY COATED REINFORCING STEEL					6115 LBS.

STAGE II

BAR	NO.	SIZE	TYPE	LENGTH	WEIGHT
✳ B1	2	#7	STR	19'-6"	80
✳ B2	4	#7	STR	19'-1"	156
✳ B3	4	#7	STR	21'-0"	172
✳ B4	6	#7	STR	22'-6"	276
✳ B5	6	#7	STR	22'-10"	280
✳ B6	6	#7	STR	23'-0"	282
✳ B7	8	#7	STR	23'-7"	386
✳ B8	4	#7	STR	25'-6"	208
✳ B9	2	#7	STR	24'-6"	100
✳ B10	6	#7	STR	25'-1"	308
✳ B11	4	#7	STR	26'-0"	213
✳ B12	6	#7	STR	26'-7"	326
✳ B13	4	#7	STR	27'-0"	221
✳ B14	6	#7	STR	29'-0"	356
✳ B15	4	#7	STR	15'-1"	123
✳ B16	4	#7	STR	16'-5"	134
✳ B101	2	#5	STR	19'-6"	41
✳ B102	4	#5	STR	19'-1"	80
✳ B103	4	#5	STR	21'-0"	88
✳ B104	6	#5	STR	22'-6"	141
✳ B105	6	#5	STR	22'-10"	143
✳ B106	6	#5	STR	23'-0"	144
✳ B107	8	#5	STR	23'-7"	197
✳ B108	4	#5	STR	25'-6"	106
✳ B109	2	#5	STR	24'-6"	51
✳ B110	6	#5	STR	25'-1"	157
✳ B111	4	#5	STR	26'-0"	108
✳ B112	6	#5	STR	26'-7"	166
✳ B113	4	#5	STR	27'-0"	113
✳ B114	6	#5	STR	29'-0"	181
✳ B115	4	#5	STR	13'-6"	56
✳ B116	4	#5	STR	14'-10"	62
✳ B117	32	#5	STR	11'-2"	373
✳ B118	16	#5	STR	19'-6"	325
✳ S3	1303	#5	2	8'-6"	11552
✳ S4	16	#5	3	4'-1"	68
✳ U1	16	#5	4	5'-9"	96
✳ EPOXY COATED REINFORCING STEEL					17869 LBS.

TOTAL QUANTITIES

⊛ ✳ EPOXY COATED REINFORCING STEEL	23984 LBS.
⊛ CLASS AA CONCRETE ✳✳	90.0 CU. YDS.
CLASSIC CONCRETE BRIDGE RAIL	
SUPERSTRUCTURE	965.28 LIN. FT.
APPROACH SLAB	100.00 LIN. FT.
TOTAL	1065.28 LIN. FT.

✳✳ NOTE: CONCRETE QUANTITY DOES NOT INCLUDE THE VOLUME OF RAIL BELOW THE TOP OF SIDEWALK.

⊛ QUANTITY FOR CLASSIC CONCRETE BRIDGE RAIL ON APPROACH SLAB IS NOT INCLUDED. FOR CLASSIC CONCRETE BRIDGE RAIL ON APPROACH SLAB, SEE "BRIDGE APPROACH SLAB DETAILS" SHEET 3 OF 4.

PROJECT NO. B-4565
LENOIR COUNTY
STATION: 20+17.50 -L-

SHEET 8 OF 8

STATE OF NORTH CAROLINA
DEPARTMENT OF TRANSPORTATION
RALEIGH

SUPERSTRUCTURE

CLASSIC CONCRETE BRIDGE RAIL WITH SIDEWALK

NORTH CAROLINA PROFESSIONAL SEAL 027799 ENGINEER ALLYSON K. ORR
11/13/2014

MI ENGINEERING
1011 SCHAUB DRIVE, SUITE 100
RALEIGH, NC 27606
(919) 851-6606
FIRM PE NUMBER : P-0671

REVISIONS						SHEET NO.
NO.	BY:	DATE:	NO.	BY:	DATE:	S-32
1			3			TOTAL SHEETS
2			4			118

DRAWN BY : B.E. ATKINSON DATE : 07/14
CHECKED BY : A.K. ORR DATE : 09/14
DESIGN ENGINEER OF RECORD : A.K. ORR DATE : 10/14

11/13/2014
1:21:58 PM
User: blanning
Filename: P:\NC Bridges\MI4001.01 - B-4565 Lenoir\Site 1\Structures\401.160.S01.B4565.SMU.CCR08.dgn