DocuSign Envelope ID: A67ABEF4-0DAE-48C7-97EB-263367BB90D4

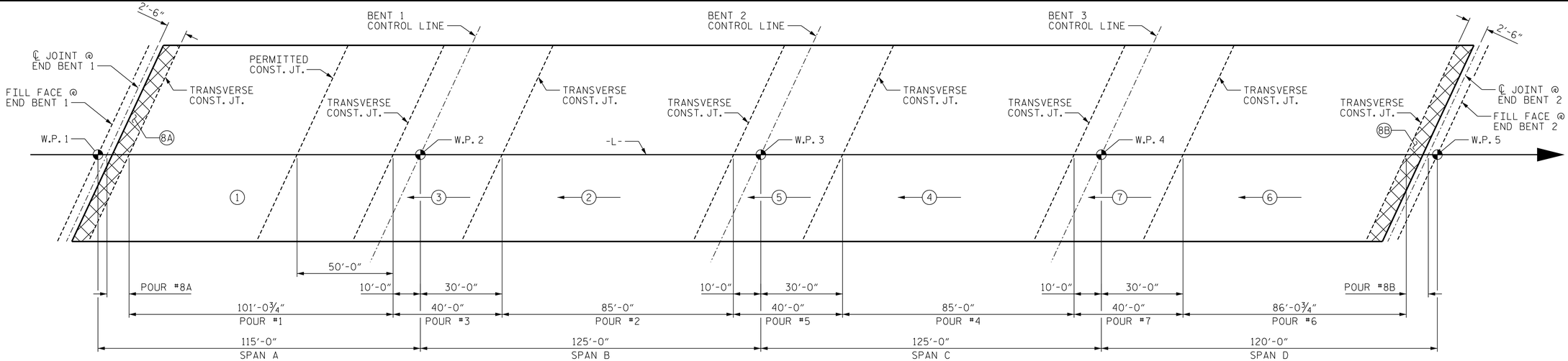

POURING SEQUENCE

(#) INDICATES POUR NUMBER AND POUR DIRECTION

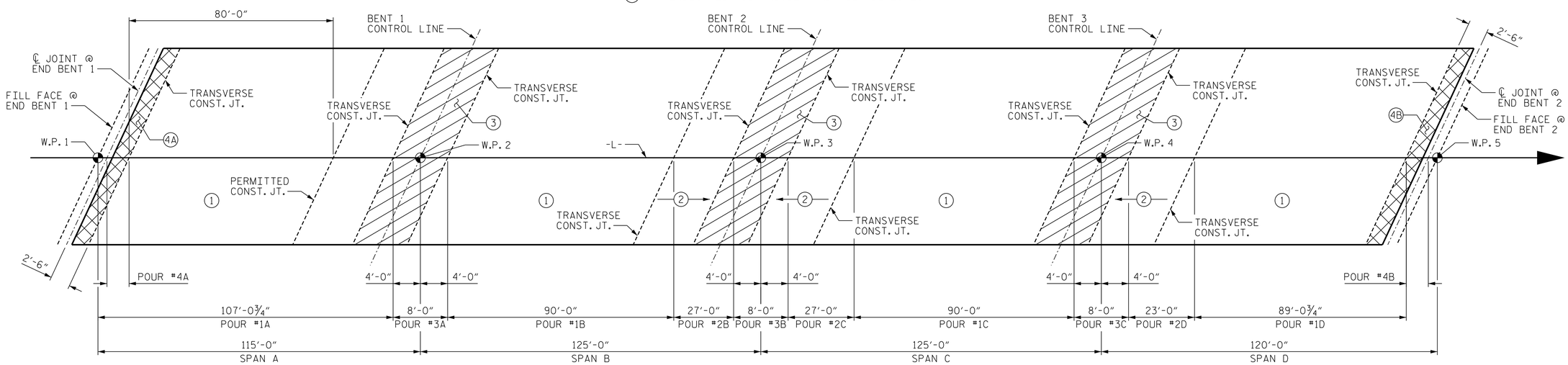

OPTIONAL POURING SEQUENCE

(#) INDICATES POUR NUMBER AND POUR DIRECTION

NOTE: NO CLOSURE POUR SHALL OCCUR UNTIL THE CONCRETE IN ADJACENT SPANS HAS REACHED A STRENGTH OF 3,000 PSI.

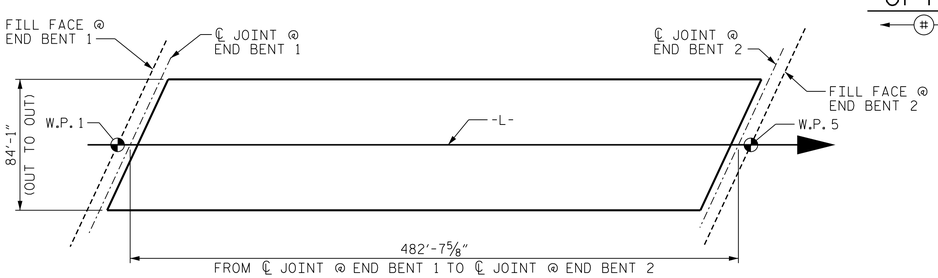

LAYOUT FOR COMPUTING AREA REINFORCED CONCRETE DECK SLAB (SQ. FT. = 40,582)

LEGEND :

- DECK CLOSURE POUR AT CONTINUOUS BENTS
- DECK CLOSURE POUR AT JOINTS

SUPERSTRUCTURE BILL OF MATERIAL

	CLASS AA CONCRETE	REINFORCING STEEL	EPOXY COATED REINFORCING STEEL
	(CU. YDS.)	(LBS.)	(LBS.)
POUR #1	273.3	-	-
POUR #2	229.8	-	-
POUR #3	150.6	-	-
POUR #4	229.8	-	-
POUR #5	150.6	-	-
POUR #6	232.7	-	-
POUR #7	150.6	-	-
POUR #8A	13.2	-	-
POUR #8B	13.2	-	-
TOTALS**	1443.8	131,440	161,012

**QUANTITIES FOR CLASSIC CONCRETE BRIDGE RAIL, CONCRETE SIDEWALK AND CONCRETE MEDIAN ARE NOT INCLUDED.

GROOVING BRIDGE FLOORS

APPROACH SLABS	2,878 SQ.FT.
BRIDGE DECK	29,241 SQ.FT.
TOTAL	32,120 SQ.FT.

PROJECT NO. B-4565
LENOIR COUNTY
STATION: 20+17.50 -L-

SHEET 1 OF 2

STATE OF NORTH CAROLINA
DEPARTMENT OF TRANSPORTATION
RALEIGH

STANDARD
SUPERSTRUCTURE BILL OF MATERIAL

NORTH CAROLINA PROFESSIONAL SEAL 027799 ENGINEER ALLYSON K. ORR
11/13/2014

MI ENGINEERING
1011 SCHAUB DRIVE, SUITE 100
RALEIGH, NC 27606
(919) 851-6606
FIRM PE NUMBER : P-0671

REVISIONS						
NO.	BY:	DATE:	NO.	BY:	DATE:	
1			3			
2			4			

SHEET NO. S-38
TOTAL SHEETS 118

STD. NO. BOM2

ASSEMBLED BY:	B.E. LANNING	DATE:	09/14
CHECKED BY :	A.K. ORR	DATE:	09/14
DESIGN ENGINEER OF RECORD:	A.K. ORR	DATE:	10/14
DRAWN BY :	JMB 5/87	REV. 8/16/99	RWW/LES
CHECKED BY :	SJD 9/87	REV. 5/1/06	TLA/GM
		REV. 10/1/11	MAA/GM

11/13/2014
1:22:09 PM
User: blanning
Filename: P:\NC Bridges\M14001.01 - B-4565 Lenoir\Site 1\Structures\401_I85_S01_B4565_SMU_BOM01.dgn