DocuSign Envelope ID: A67ABEF4-0DAE-48C7-97EB-263367BB90D4

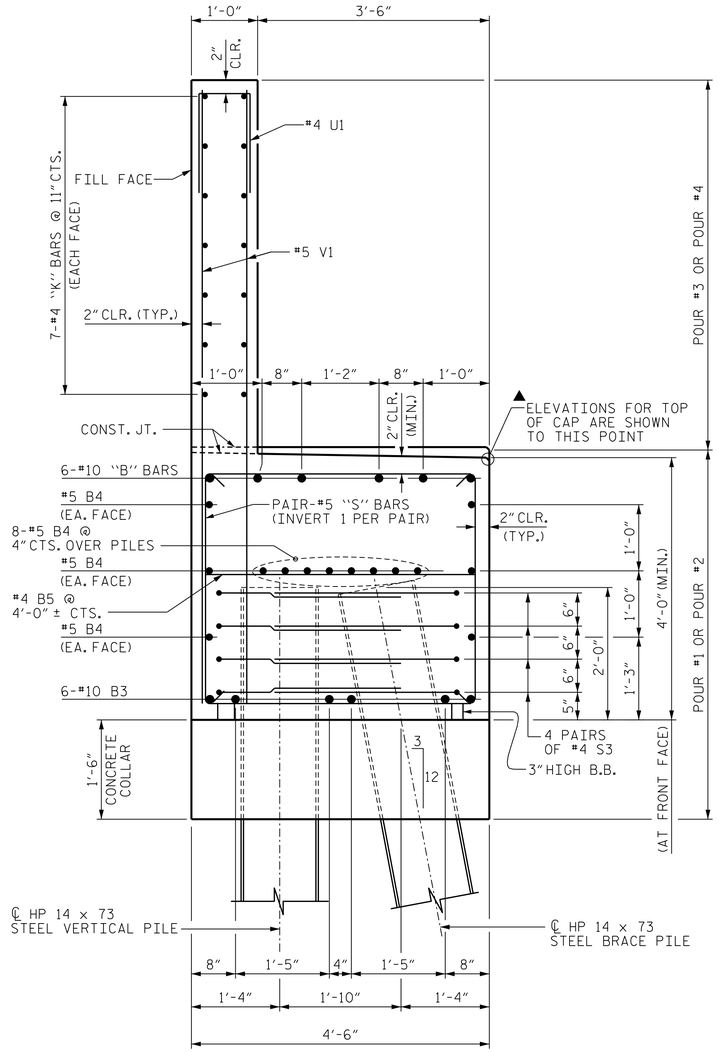

SECTION A-A

TYPICAL AT DOUBLE ROW OF PILES

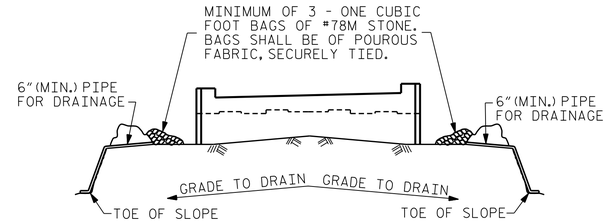

BAGGED STONE AND PIPE SHALL BE PLACED IMMEDIATELY AFTER COMPLETION OF END BENT EXCAVATION. PIPE MAY BE EITHER CONCRETE, CORRUGATED STEEL, CORRUGATED ALUMINUM ALLOY, OR CORRUGATED PLASTIC. PERFORATED PIPE WILL NOT BE ALLOWED.

BAGGED STONE SHALL REMAIN IN PLACE UNTIL THE ENGINEER DIRECTS THAT IT BE REMOVED. THE CONTRACTOR SHALL REMOVE AND DISPOSE OF SILT ACCUMULATIONS AT BAGGED STONE WHEN SO DIRECTED BY THE ENGINEER. BAGS SHALL BE REMOVED AND REPLACED WHENEVER THE ENGINEER DETERMINES THAT THEY HAVE DETERIORATED AND LOST THEIR EFFECTIVENESS.

NO SEPARATE PAYMENT WILL BE MADE FOR THIS WORK AND THE ENTIRE COST OF THIS WORK SHALL BE INCLUDED IN THE UNIT CONTRACT PRICE BID FOR THE SEVERAL PAY ITEMS.

TEMPORARY DRAINAGE AT END BENT

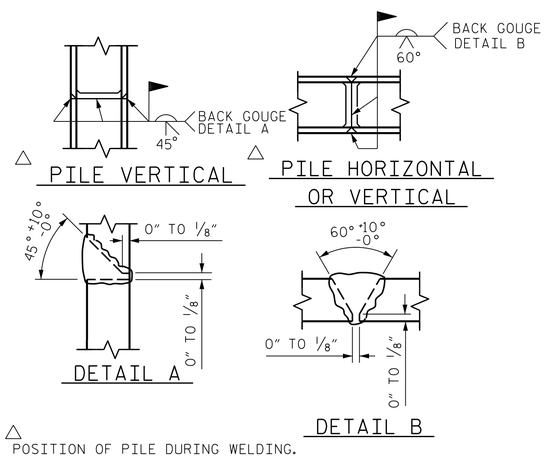

PILE SPLICE DETAILS

BAR TYPES

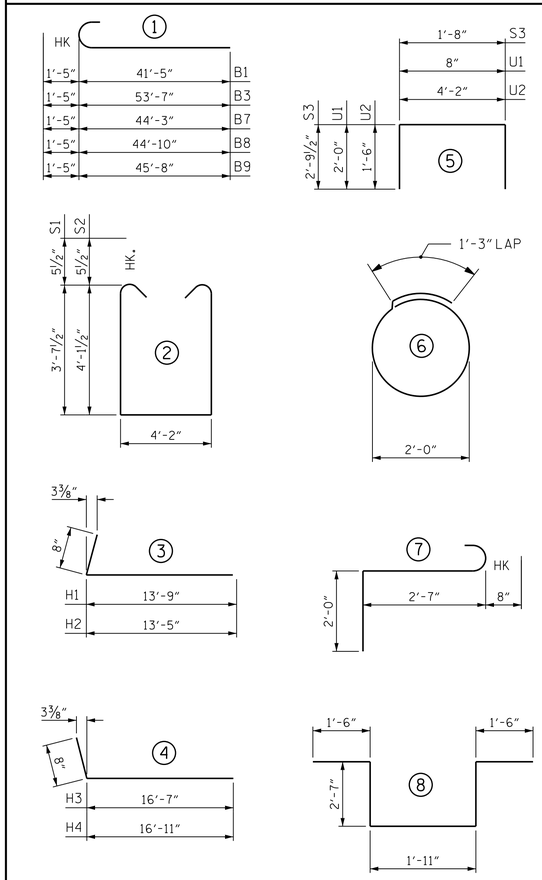

ALL BAR DIMENSIONS ARE OUT TO OUT.

BILL OF MATERIAL

END BENT 1

BAR	NO.	SIZE	TYPE	LENGTH	WEIGHT
B1	6	#10	1	42'-10"	1106
B2	6	#10	STR	41'-5"	1069
B3	12	#10	1	55'-0"	2840
B4	28	#5	STR	51'-1"	1492
B5	28	#4	STR	4'-2"	78
B6	24	#4	STR	3'-2"	51
B7	2	#10	1	45'-8"	393
B8	2	#10	1	46'-3"	398
B9	2	#10	1	47'-1"	405
H1	14	#4	3	14'-5"	135
H2	14	#4	3	14'-1"	132
H3	15	#4	4	17'-3"	173
H4	15	#4	4	17'-7"	176
K1	56	#4	STR	26'-8"	998
K2	8	#4	STR	2'-10"	15
S1	110	#5	2	12'-4"	1415
S2	92	#5	2	13'-4"	1279
S3	72	#4	5	7'-3"	349
S4	8	#4	6	7'-6"	40
S5	6	#4	8	10'-1"	40
S6	6	#6	7	5'-3"	47
U1	93	#4	5	4'-8"	290
U2	16	#4	5	7'-2"	77
V1	186	#5	STR	9'-8"	1875
V2	10	#5	STR	11'-10"	123
V3	10	#5	STR	12'-6"	130
V4	52	#5	STR	7'-1"	384
V5	64	#5	STR	7'-5"	495

REINFORCING STEEL 16,005 LBS.

CLASS A CONCRETE BREAKDOWN

POUR #1 (CAP, COLLARS & LOWER WING W1)	49.8 C.Y.
POUR #2 (CAP, COLLARS & LOWER WING W2)	33.7 C.Y.
POUR #3 (BACKWALL & UPPER WING W1)	18.3 C.Y.
POUR #4 (BACKWALL & UPPER WING W2)	13.8 C.Y.
TOTAL CLASS A CONCRETE	115.6 C.Y.

HP 14 x 73 STEEL PILES NO. 22 1430 LIN. FT.

PILE REDRIVES 6 EACH

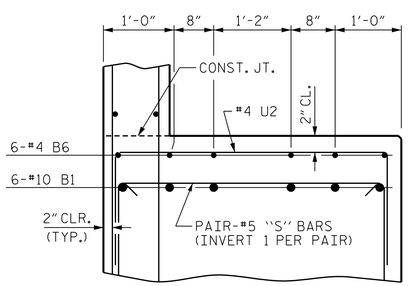

SECTION B-B

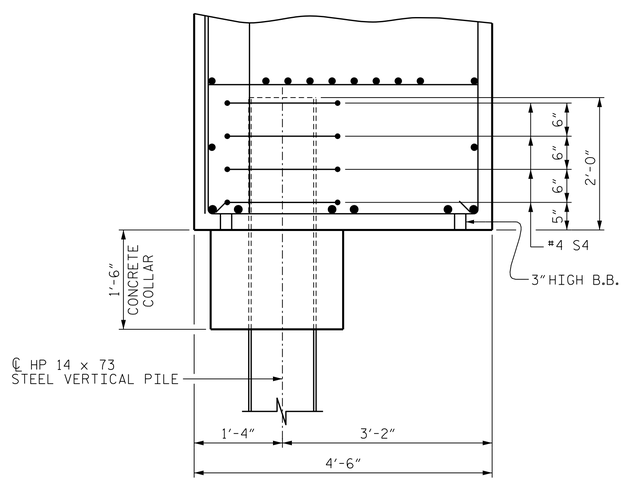

SECTION C-C

TYPICAL AT SINGLE PILE

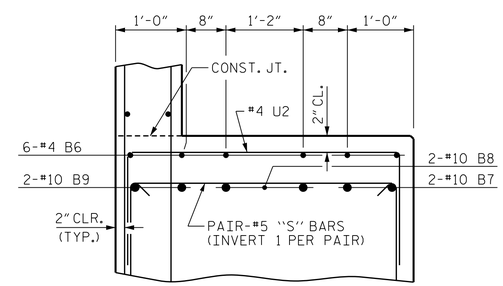

SECTION D-D

NORTH CAROLINA PROFESSIONAL SEAL 027799 ENGINEER ALLYSON K. ORR

11/13/2014

PROJECT NO. B-4565

LENOIR COUNTY

STATION: 20+17.50 -L-

SHEET 4 OF 4

STATE OF NORTH CAROLINA
DEPARTMENT OF TRANSPORTATION
RALEIGH

SUBSTRUCTURE

END BENT 1

DRAWN BY : B.E. ATKINSON DATE : 09/14
CHECKED BY : P.A. de PAOLI DATE : 09/14
DESIGN ENGINEER OF RECORD : A.K. ORR DATE : 10/14

MI ENGINEERING
1011 SCHAUB DRIVE, SUITE 100
RALEIGH, NC 27606
(919) 851-6606
FIRM PE NUMBER : P-0671

REVISIONS								SHEET NO.
NO.	BY:	DATE:	NO.	BY:	DATE:			S-43
1			3					TOTAL SHEETS
2			4					118

11/13/2014
11:22:20 PM
User: blanning
Filename: P:\NC Bridges\M14001.01 - B-4565 Lenoir\Site 1\Structures\401_210_S01_B4565_SMU_E104.dgn