DocuSign Envelope ID: A67ABEF4-0DAE-48C7-97EB-263367BB90D4

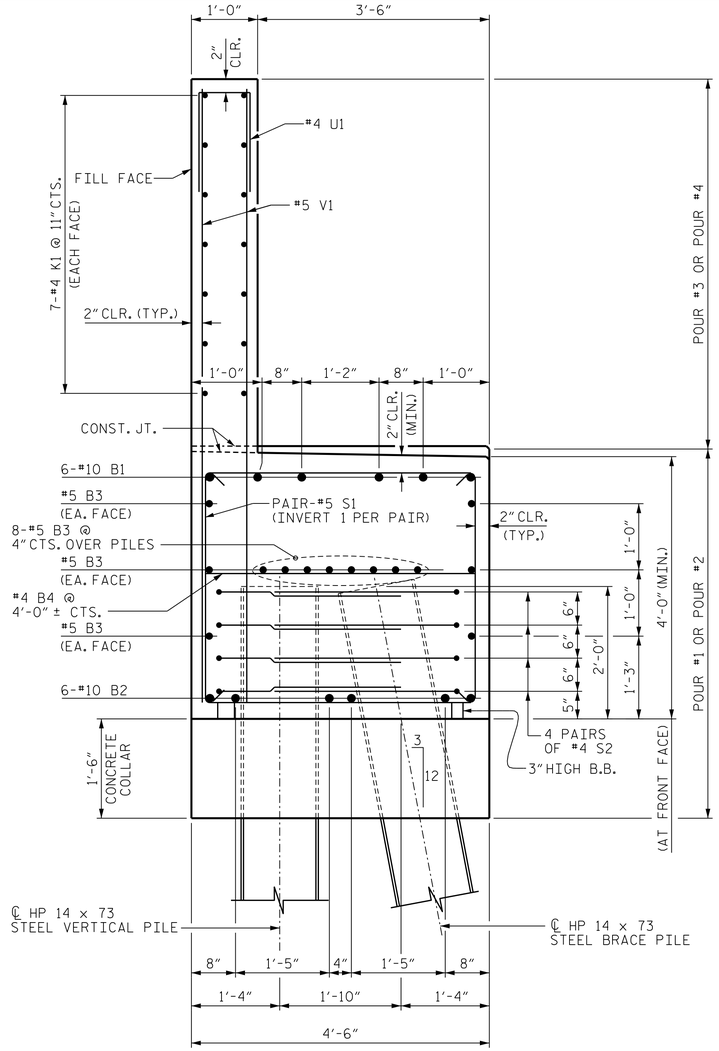

SECTION A-A

TYPICAL AT DOUBLE ROW OF PILES

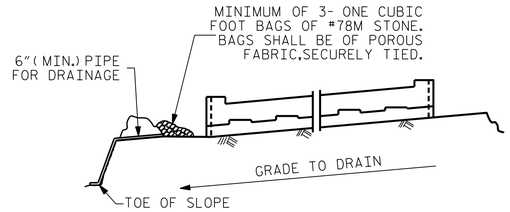

BAGGED STONE AND PIPE SHALL BE PLACED IMMEDIATELY AFTER COMPLETION OF END BENT EXCAVATION. PIPE MAY BE EITHER CONCRETE, CORRUGATED STEEL, CORRUGATED ALUMINUM ALLOY, OR CORRUGATED PLASTIC. PERFORATED PIPE WILL NOT BE ALLOWED.

BAGGED STONE SHALL REMAIN IN PLACE UNTIL THE ENGINEER DIRECTS THAT IT BE REMOVED. THE CONTRACTOR SHALL REMOVE AND DISPOSE OF SILT ACCUMULATIONS AT BAGGED STONE WHEN SO DIRECTED BY THE ENGINEER. BAGS SHALL BE REMOVED AND REPLACED WHENEVER THE ENGINEER DETERMINES THAT THEY HAVE DETERIORATED AND LOST THEIR EFFECTIVENESS.

NO SEPARATE PAYMENT WILL BE MADE FOR THIS WORK AND THE ENTIRE COST OF THIS WORK SHALL BE INCLUDED IN THE UNIT CONTRACT PRICE BID FOR THE SEVERAL PAY ITEMS.

TEMPORARY DRAINAGE AT END BENT

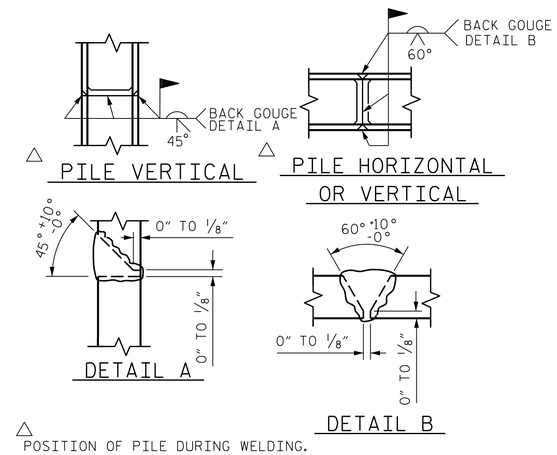

PILE SPLICE DETAILS

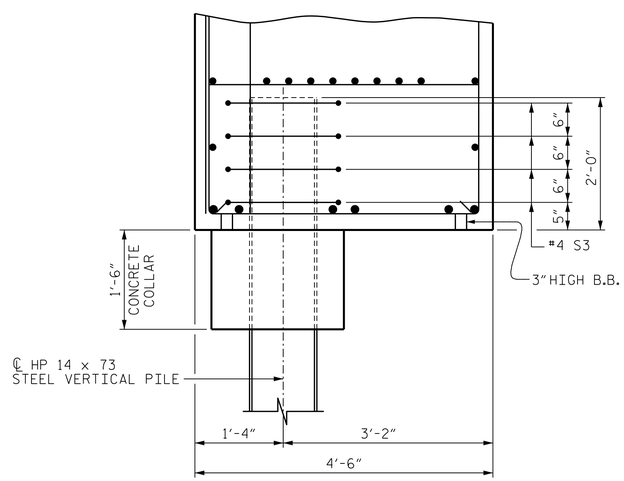

SECTION B-B

TYPICAL AT SINGLE PILE

BAR TYPES

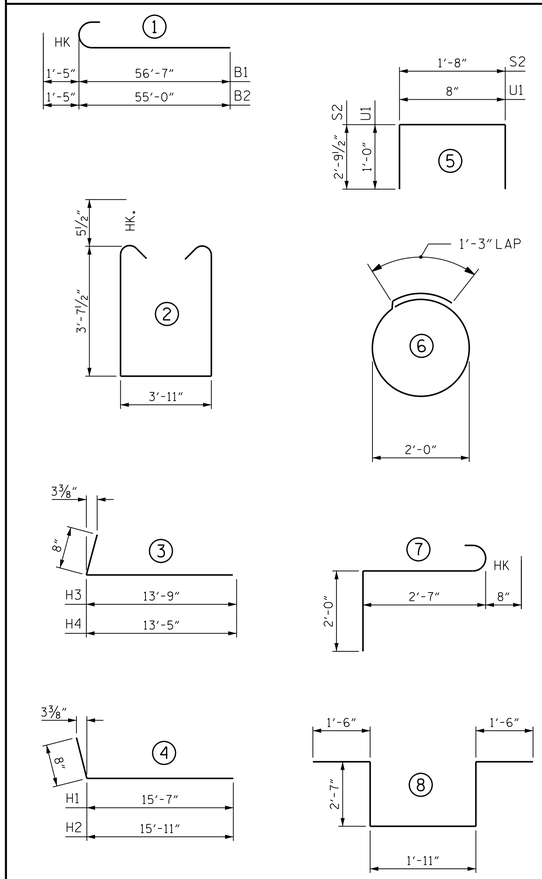

ALL BAR DIMENSIONS ARE OUT TO OUT.

BILL OF MATERIAL

END BENT 2

BAR	NO.	SIZE	TYPE	LENGTH	WEIGHT
B1	12	#10	1	56'-7"	2,922
B2	12	#10	1	55'-0"	2,767
B3	28	#5	STR	51'-1"	1,492
B4	24	#4	STR	4'-2"	67
H1	14	#4	4	16'-3"	152
H2	14	#4	4	16'-7"	155
H3	14	#4	3	14'-5"	135
H4	14	#4	3	14'-1"	132
K1	56	#4	STR	26'-8"	998
K2	8	#4	STR	2'-10"	15
S1	202	#5	2	12'-4"	2,598
S2	72	#4	5	7'-3"	349
S3	8	#4	6	7'-6"	40
S4	6	#6	7	5'-3"	47
S5	6	#4	8	10'-1"	40
U1	93	#4	5	2'-8"	166
V1	186	#5	STR	9'-10"	1908
V2	10	#5	STR	11'-11"	124
V3	10	#5	STR	11'-6"	120
V4	60	#5	STR	7'-1"	443
V5	52	#5	STR	6'-11"	375

REINFORCING STEEL	15,045 LBS.
CLASS A CONCRETE BREAKDOWN	
POUR #1 (CAP, COLLARS & LOWER WING W1)	48.4 C.Y.
POUR #2 (CAP, COLLARS & LOWER WING W2)	30.1 C.Y.
POUR #3 (BACKWALL & UPPER WING W1)	19.0 C.Y.
POUR #4 (BACKWALL & UPPER WING W2)	12.3 C.Y.
TOTAL CLASS A CONCRETE	109.8 C.Y.
HP 14 x 73 STEEL PILES NO. 22	1210 LIN. FT.
PILE REDRIVES	6 EACH

PROJECT NO. B-4565

LENOIR COUNTY

STATION: 20+17.50 -L-

SHEET 4 OF 4

STATE OF NORTH CAROLINA
DEPARTMENT OF TRANSPORTATION
RALEIGH

SUBSTRUCTURE

END BENT 2

NORTH CAROLINA PROFESSIONAL SEAL 027799 ENGINEER ALLYSON K. ORR
11/13/2014

MI ENGINEERING
1011 SCHAUB DRIVE, SUITE 100
RALEIGH, NC 27606
(919) 851-6606
FIRM PE NUMBER : P-0671

REVISIONS							SHEET NO.
NO.	BY:	DATE:	NO.	BY:	DATE:		S-53
1			3				TOTAL SHEETS
2			4				118

DRAWN BY :	B.E. ATKINSON	DATE :	09/14
CHECKED BY :	P.A. de PAOLI	DATE :	09/14
DESIGN ENGINEER OF RECORD :	A.K. ORR	DATE :	10/14

11/13/2014
1:22:41 PM
User: blanning
Filename: P:\NC Bridges\MI4001.01 - B-4565 Lenoir\Site 1\Structures\401_260_S01_B4565_SMU_E204.dgn