DocuSign Envelope ID: A67ABEF4-0DAE-48C7-97EB-263367BB90D4

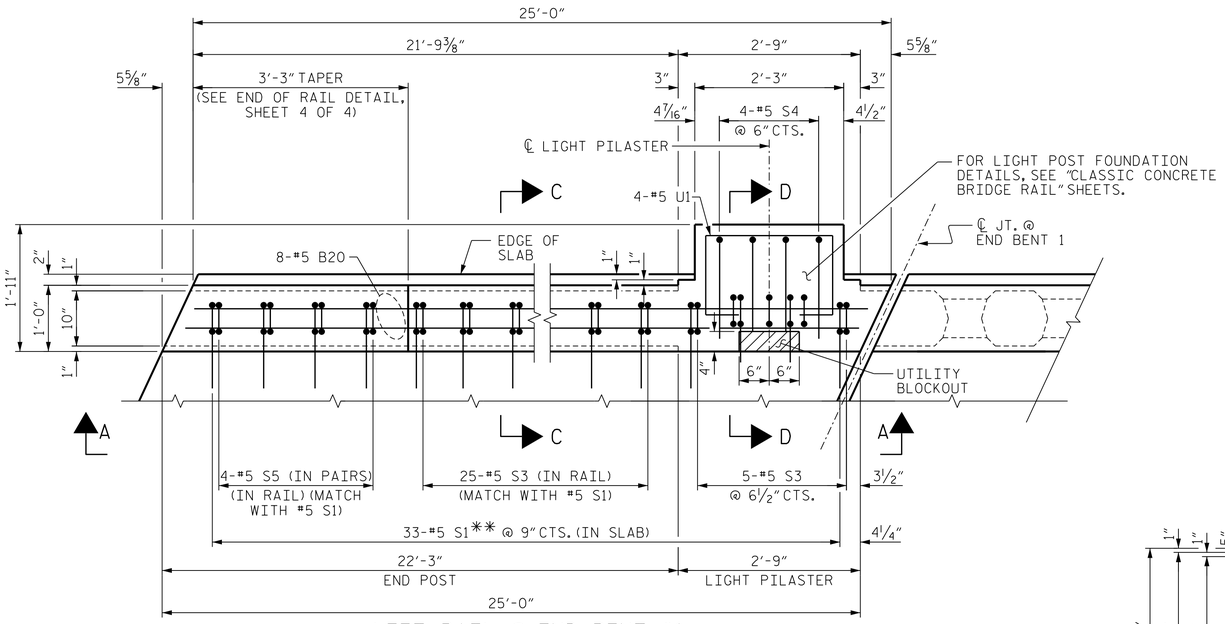

LEFT RAIL @ END BENT #1

(RIGHT RAIL @ END BENT 2 SIMILAR EXCEPT REPLACE #5 S1 WITH #5 S2**)

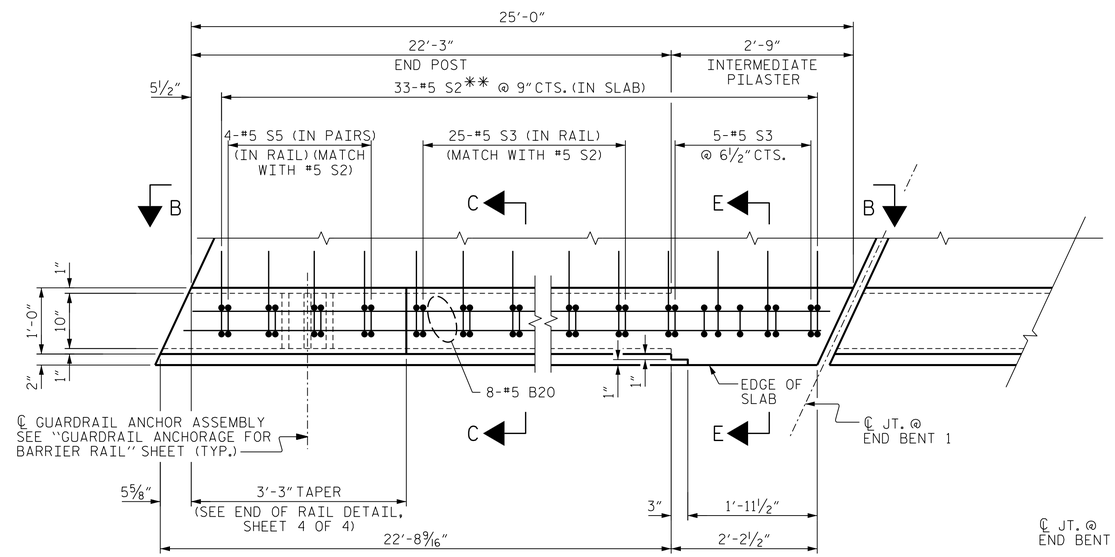

RIGHT RAIL @ END BENT #1

(LEFT RAIL @ END BENT 2 SIMILAR EXCEPT REPLACE #5 S2 WITH #5 S1**)

PLAN OF CLASSIC CONCRETE BRIDGE RAIL ON APPROACH SLAB

FOR SECTIONS C-C, D-D & E-E, SEE SHEET 4 OF 4.

** #5 S1 & #5 S2 ARE CAST IN THE APPROACH SLAB.

NOTES

THE COST OF THE CLASSIC CONCRETE BRIDGE RAIL ON THE APPROACH SLAB SHALL BE INCLUDED IN THE LINEAR FOOT CONTRACT PRICE BID FOR "CLASSIC CONCRETE BRIDGE RAIL".

THE CLASSIC CONCRETE BRIDGE RAIL ON EACH APPROACH SLAB SHALL NOT BE CAST UNTIL ALL APPROACH SLAB CONCRETE HAS BEEN CAST AND HAS REACHED A MINIMUM COMPRESSIVE STRENGTH OF 3,000 PSI.

ALL REINFORCING STEEL IN CLASSIC CONCRETE BRIDGE RAIL SHALL BE EPOXY COATED.

ALL PARTS OF THE CLASSIC BARRIER RAILING INCLUDING BUT NOT LIMITED TO THE REINFORCING STEEL, CLASS AA CONCRETE, ANCHOR BOLTS AND INCIDENTALS SHALL BE INCLUDED IN THE UNIT PRICE BID PER LINEAR FOOT FOR "CLASSIC CONCRETE BRIDGE RAIL". NO SEPARATE MEASUREMENT OR PAYMENT WILL BE MADE FOR THESE ITEMS.

FOR CLASSIC CONCRETE BRIDGE RAIL, SEE SPECIAL PROVISIONS.

FOR ELECTRICAL CONDUIT DETAILS, SEE "ELECTRICAL CONDUIT SYSTEM" SHEET.

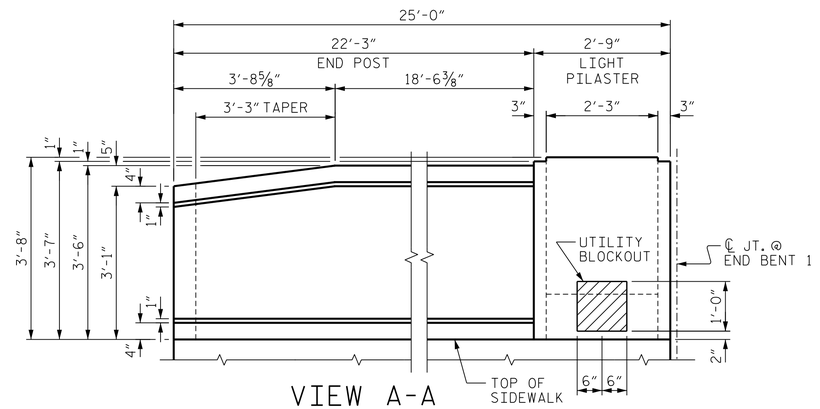

VIEW A-A

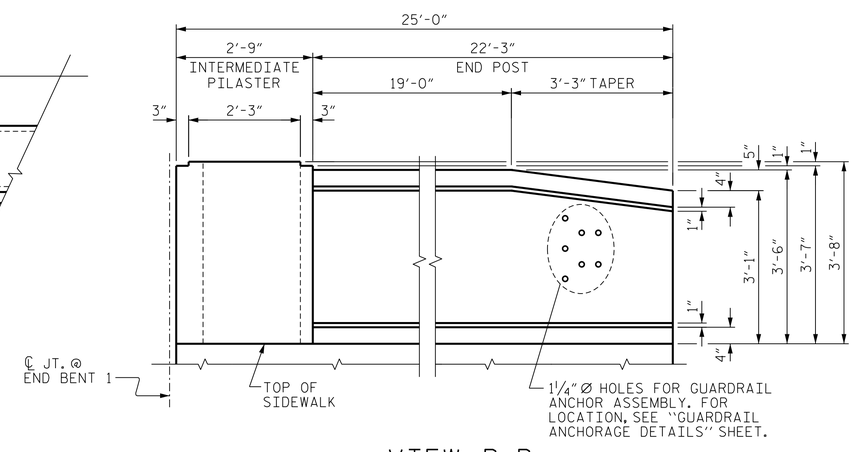

VIEW B-B

BAR TYPES

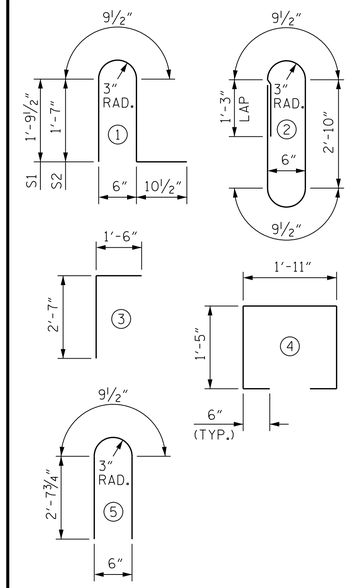

ALL BAR DIMENSIONS ARE OUT TO OUT.

†BILL OF MATERIAL

CLASSIC CONCRETE BRIDGE RAIL ONLY

STAGE I

BAR	NO.	SIZE	TYPE	LENGTH	WEIGHT
* S1	66	#5	1	5'-3"	361
* S2	66	#5	1	4'-10"	333
* EPOXY COATED REINFORCING STEEL				LBS.	694

STAGE II

BAR	NO.	SIZE	TYPE	LENGTH	WEIGHT
* B20	32	#5	STR	24'-7"	820
* S3	120	#5	2	8'-6"	1064
* S4	8	#5	3	4'-1"	34
* S5	32	#5	5	6'-1"	203
* U1	8	#5	4	5'-9"	48
* EPOXY COATED REINFORCING STEEL				LBS.	2169

TOTAL QUANTITIES

* EPOXY COATED REINFORCING STEEL	LBS.	2863
CLASS AA CONCRETE	C.Y.	12.2
CLASSIC CONCRETE BRIDGE RAIL	100.0	LIN. FT.

†QUANTITIES ARE TOTAL FOR BOTH APPROACH SLABS.

PROJECT NO. B-4565

LENOIR COUNTY

STATION: 20+17.50 -L-

SHEET 3 OF 4

STATE OF NORTH CAROLINA
DEPARTMENT OF TRANSPORTATION
RALEIGH

BRIDGE APPROACH SLAB DETAILS

NORTH CAROLINA PROFESSIONAL SEAL 027799 ENGINEER ALLYSON K. ORR

11/13/2014

MI ENGINEERING
1011 SCHAUB DRIVE, SUITE 100
RALEIGH, NC 27606
(919) 851-6606
FIRM PE NUMBER : P-0671

REVISIONS						SHEET NO.
NO.	BY:	DATE:	NO.	BY:	DATE:	S-58
1			3			TOTAL SHEETS
2			4			118

DRAWN BY : B.E. ATKINSON DATE : 08/14
CHECKED BY : A.K. ORR DATE : 09/14
DESIGN ENGINEER OF RECORD : A.K. ORR DATE : 10/14

11/13/2014
11:22:53 PM
User: blanning
Filename: P:\NC Bridges\MI4001.01 - B-4565 Lenoir\Site 1\Structures\401_285_S01_B4565_SMU_BAS03.dgn