DocuSign Envelope ID: A67ABEF4-0DAE-48C7-97EB-263367BB90D4

NOTES

STIRRUPS AND "U" BARS IN CAP MAY BE SHIFTED AS NECESSARY TO CLEAR ANCHOR BOLTS.

FOR SECTION A-A AND VIEW B-B, SEE SHEET 2 OF 2.

FOR STEEL PILE DETAILS AND REINFORCEMENT, SEE "36" STEEL PIPE PILE" SHEET.

GALVANIZE THE FULL LENGTH OF EACH INTERIOR BENT PILE. GALVANIZE IN ACCORDANCE WITH SECTION 1076 OF THE STANDARD SPECIFICATIONS.

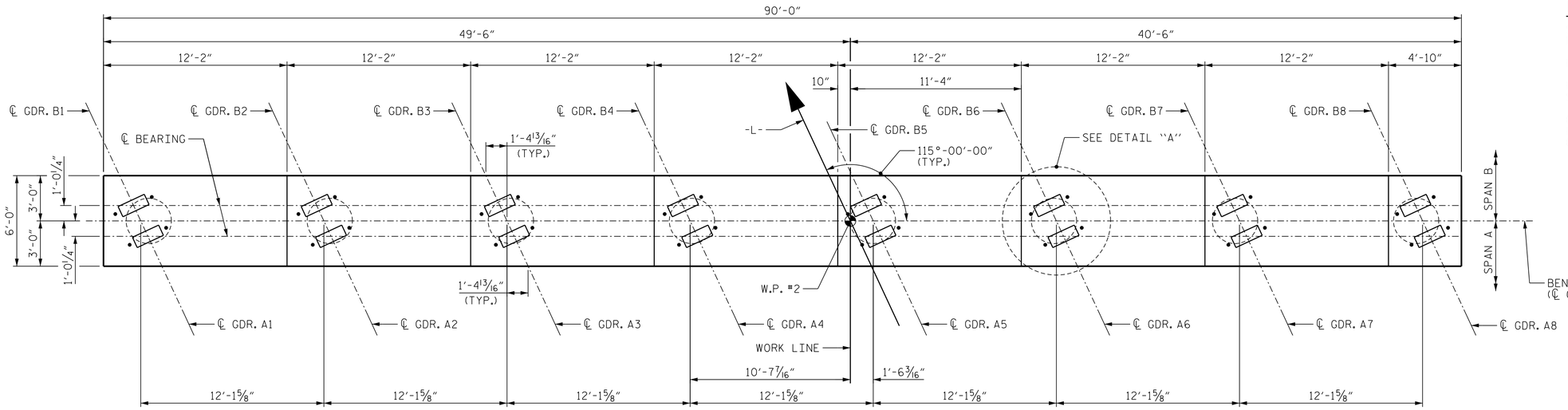

PLAN

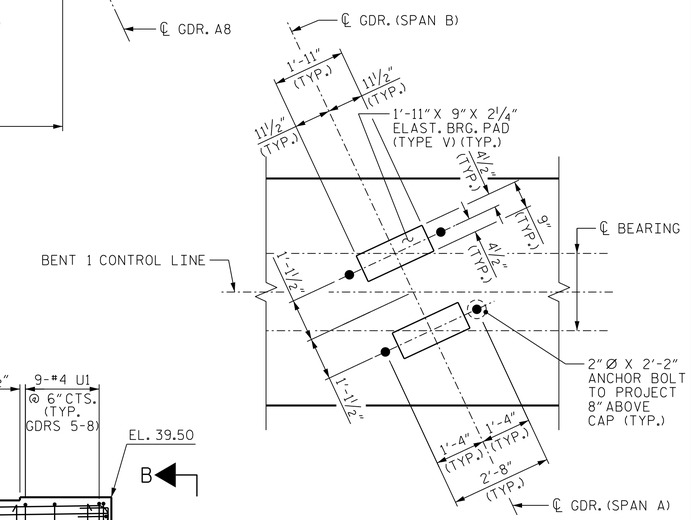

DETAIL "A"

(TYP. EA. BEARING)
(STEEL PILE NOT SHOWN)

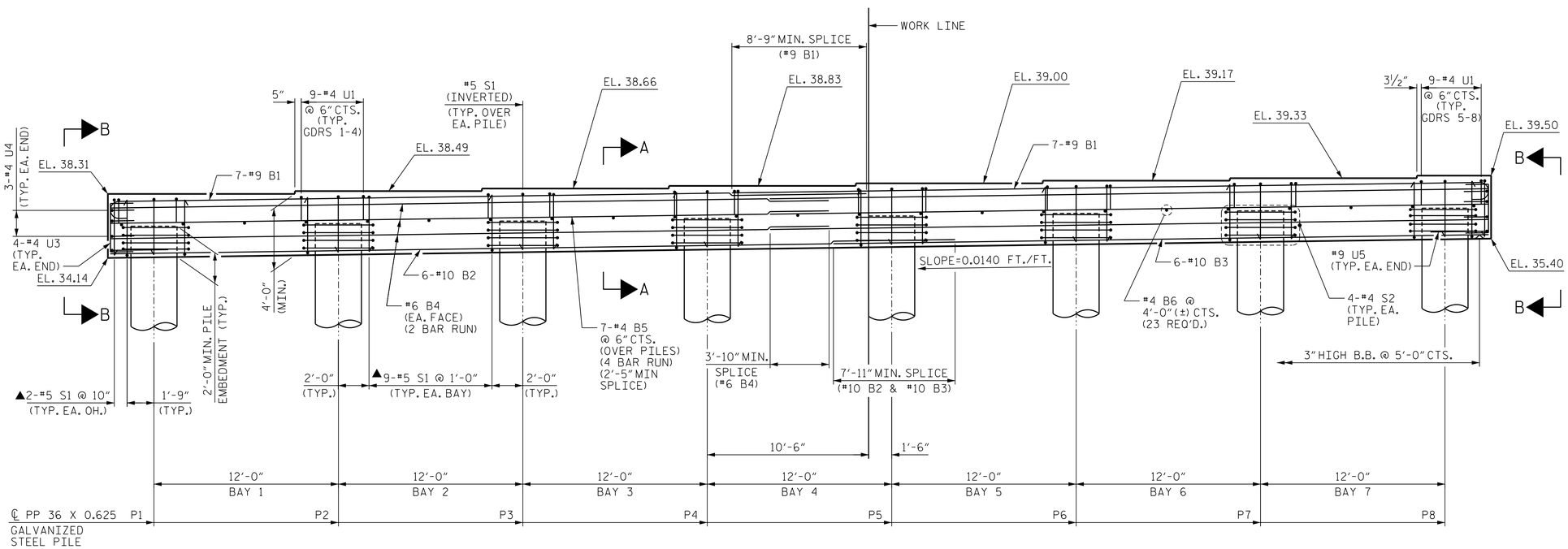

ELEVATION

▲ INVERT ALTERNATE STIRRUPS

TOP OF PILE ELEVATIONS			
PILE	ELEVATION	PILE	ELEVATION
P1	36.21	P5	36.88
P2	36.37	P6	37.05
P3	36.54	P7	37.21
P4	36.71	P8	37.38

PROJECT NO. B-4565
LENOIR COUNTY
STATION: 20+17.50 -L-

SHEET 1 OF 2

STATE OF NORTH CAROLINA
DEPARTMENT OF TRANSPORTATION
RALEIGH

SUBSTRUCTURE

BENT 1

NORTH CAROLINA PROFESSIONAL SEAL 027799 ENGINEER ALLYSON K. ORR
11/13/2014

DRAWN BY : J.S. ISRAELNAIM DATE : 09/14
CHECKED BY : G.R. COLS DATE : 09/14
DESIGN ENGINEER OF RECORD : P.A. de PAOLI DATE : 10/14

MI ENGINEERING
1011 SCHAUB DRIVE, SUITE 100
RALEIGH, NC 27606
(919) 851-6606
FIRM PE NUMBER : P-0671

REVISIONS						
NO.	BY:	DATE:	NO.	BY:	DATE:	
1			3			
2			4			

SHEET NO. S-44
TOTAL SHEETS 118

11/13/2014
1:22:22 PM
User: blanning
Filename: P:\NC Bridges\MI4001.01 - B-4565 Lenoir\Site 1\Structures\401_215_S01_B4565_SMU_BT101.dgn