DocuSign Envelope ID: A67ABEF4-0DAE-48C7-97EB-263367BB90D4

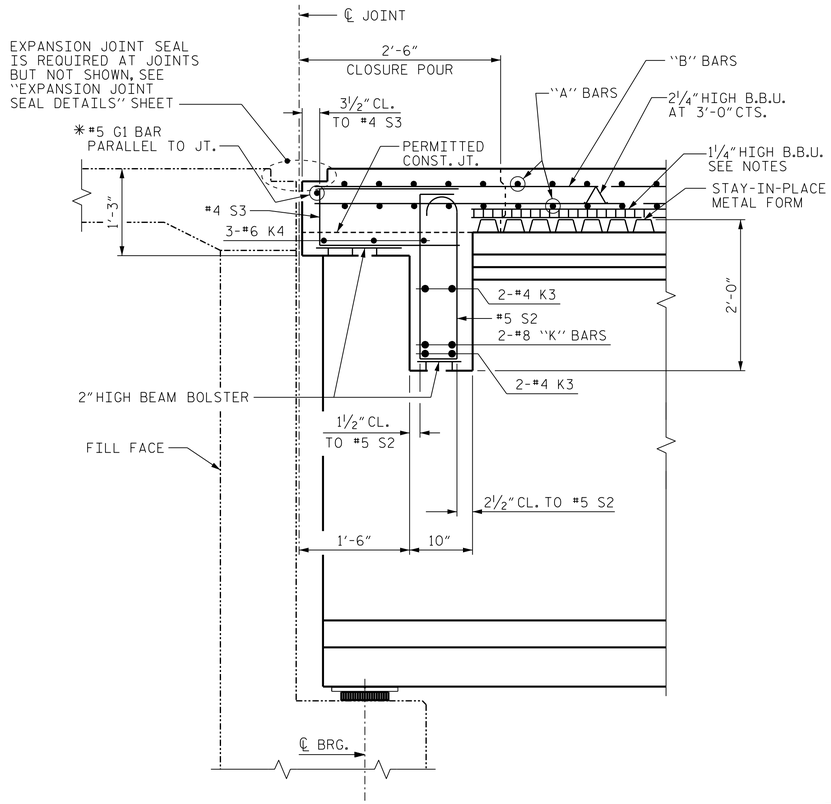

SECTION A-A

✱ #5 G1 BAR MAY BE SHIFTED SLIGHTLY, AS NECESSARY, TO CLEAR REINFORCING STEEL AND STIRRUPS.

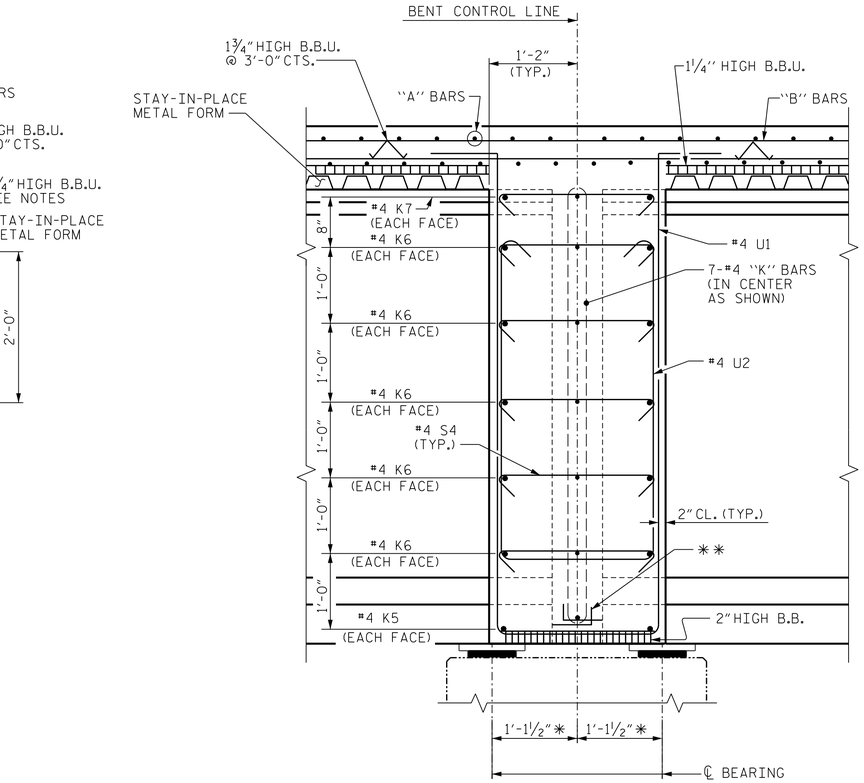

SECTION B-B

✱ MEASURED ALONG GIRDER

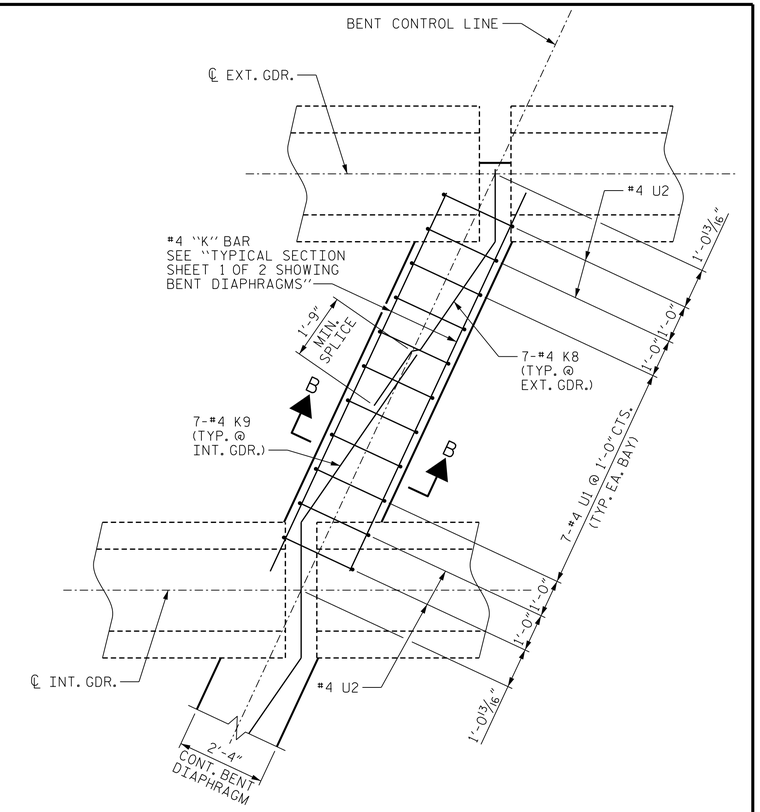

PLAN OF BENT DIAPHRAGM

✱✱ #5 "S" BARS (TYP.) (SEE GIRDER SHEETS)

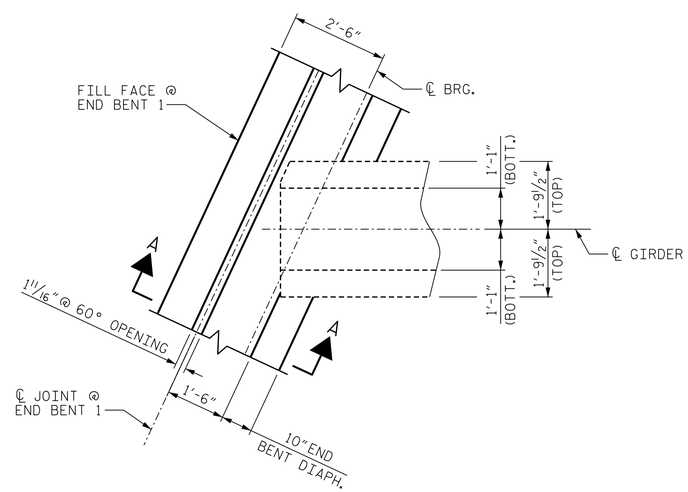

PLAN OF GIRDER AT END BENT

(END BENT 1 SHOWN, END BENT 2 SIMILAR)

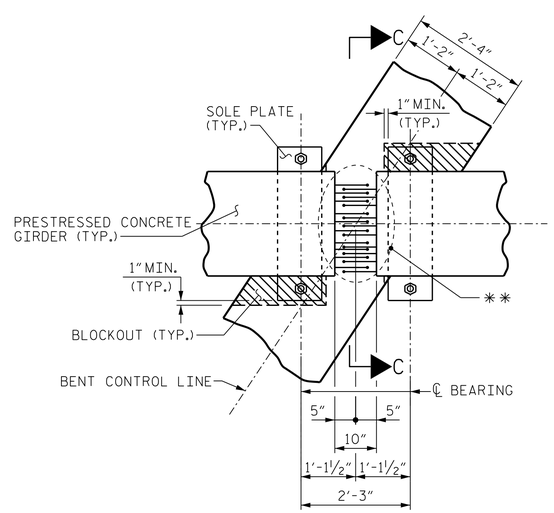

PLAN

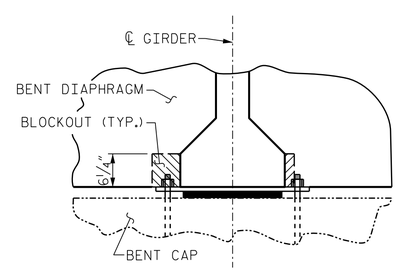

SECTION C-C

BENT DIAPHRAGM BLOCK-OUT DETAIL

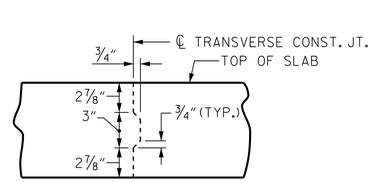

TRANSVERSE CONSTRUCTION JOINT IN DECK SLAB

NOTE: REINFORCING STEEL IN SLAB NOT SHOWN. LONGITUDINAL REINFORCING STEEL SHALL BE CONTINUOUS THRU JOINT.

PROJECT NO. B-4565

LENOIR COUNTY

STATION: 20+17.50 -L-

SHEET 2 OF 2

STATE OF NORTH CAROLINA
DEPARTMENT OF TRANSPORTATION
RALEIGH

SUPERSTRUCTURE

TYPICAL SECTION DETAILS

NORTH CAROLINA PROFESSIONAL SEAL 027799 ENGINEER ALLYSON K. ORR

11/13/2014

MI ENGINEERING
1011 SCHAUB DRIVE, SUITE 100
RALEIGH, NC 27606
(919) 851-6606
FIRM PE NUMBER : P-0671

REVISIONS						SHEET NO.
NO.	BY:	DATE:	NO.	BY:	DATE:	S-8
1			3			TOTAL SHEETS
2			4			118

DRAWN BY : B.E. LANNING DATE : 08/14
CHECKED BY : A.K. ORR DATE : 08/14
DESIGN ENGINEER OF RECORD : A.K. ORR DATE : 10/14

11/13/2014
1:21:06 PM
User: blanning
Filename: P:\NC Bridges\MI4001.01 - B-4565 Lenoir\Site 1\Structures\401_040_S01_B4565_SMU_TS02.dgn