DocuSign Envelope ID: A67ABEF4-0DAE-48C7-97EB-263367BB90D4

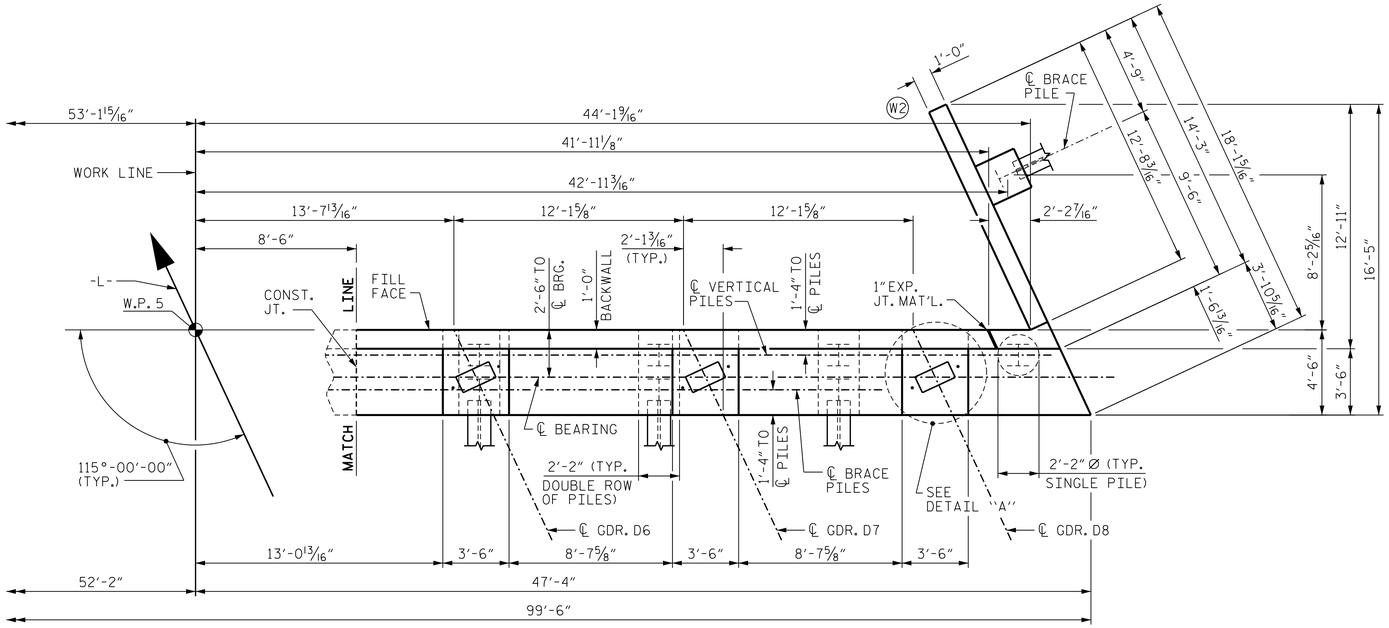

PLAN

NOTES

FOR NOTES, SEE SHEET 1 OF 4.

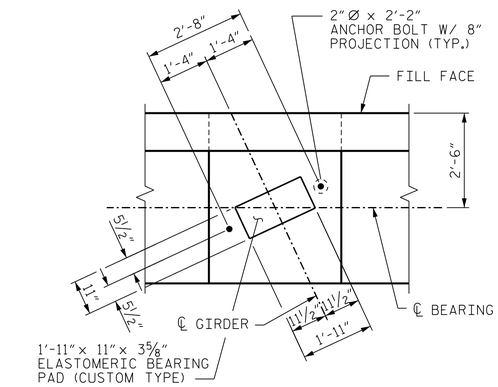

DETAIL "A"

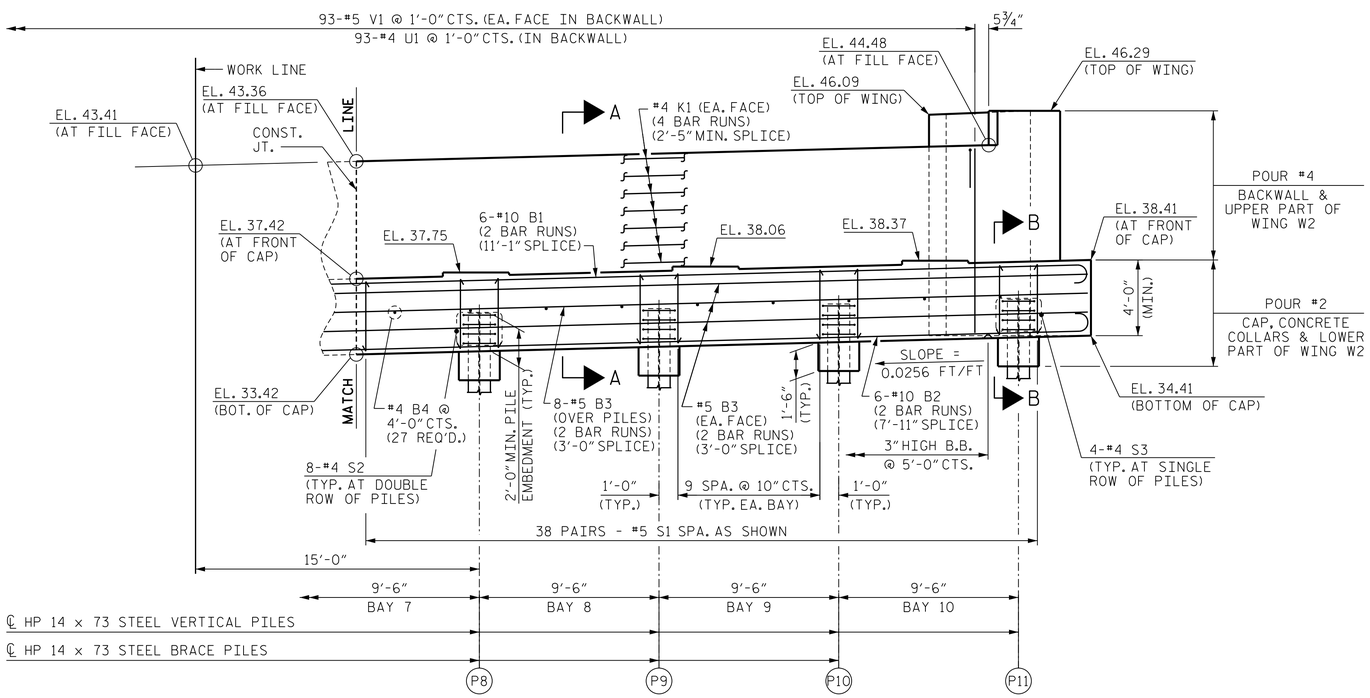

ELEVATION

(WING PILES NOT SHOWN FOR CLARITY)

TOP OF PILE ELEVATIONS	
PILE	ELEVATION
P8	35.60
P9	35.84
P10	36.09
P11	36.33

PROJECT NO. B-4565

LENOIR COUNTY

STATION: 20+17.50 -L-

SHEET 2 OF 4

STATE OF NORTH CAROLINA
DEPARTMENT OF TRANSPORTATION
RALEIGH

SUBSTRUCTURE

END BENT 2

NORTH CAROLINA PROFESSIONAL ENGINEER SEAL 027799 ALLYSON K. ORR
11/13/2014

MI ENGINEERING
1011 SCHAUB DRIVE, SUITE 100
RALEIGH, NC 27606
(919) 851-6606
FIRM PE NUMBER : P-0671

REVISIONS							
NO.	BY:	DATE:	NO.	BY:	DATE:	SHEET NO.	S-51
1			3			TOTAL SHEETS	118
2			4				

DRAWN BY :	B.E. ATKINSON	DATE :	09/14
CHECKED BY :	P.A. de PAOLI	DATE :	09/14
DESIGN ENGINEER OF RECORD :	A.K. ORR	DATE :	10/14

11/13/2014
1:22:37 PM
User: blanning
Filename: P:\NC Bridges\MI4001.01 - B-4565 Lenoir\Site 1\Structures\401_250_S01_B4565_SMU_E202.dgn