DocuSign Envelope ID: A67ABEF4-0DAE-48C7-97EB-263367BB90D4

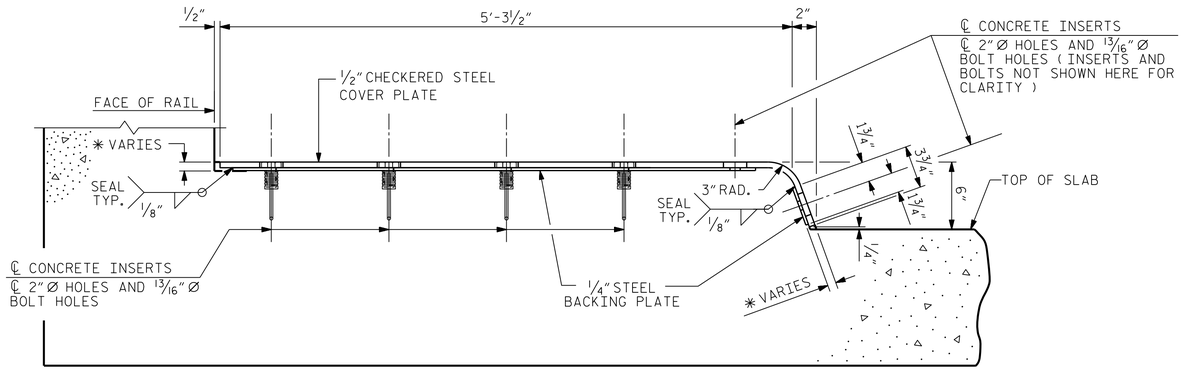

END VIEW

(NORMAL TO SIDEWALK)

* CONCRETE RECESS DIMENSIONS:

13/16" FOR THE SIDE OF THE JOINT HAVING THE 1/2" COVER PLATE WITH A 1/4" BACKING PLATE.

9/16" FOR THE SIDE OF THE JOINT HAVING ONLY THE 1/2" COVER PLATE.

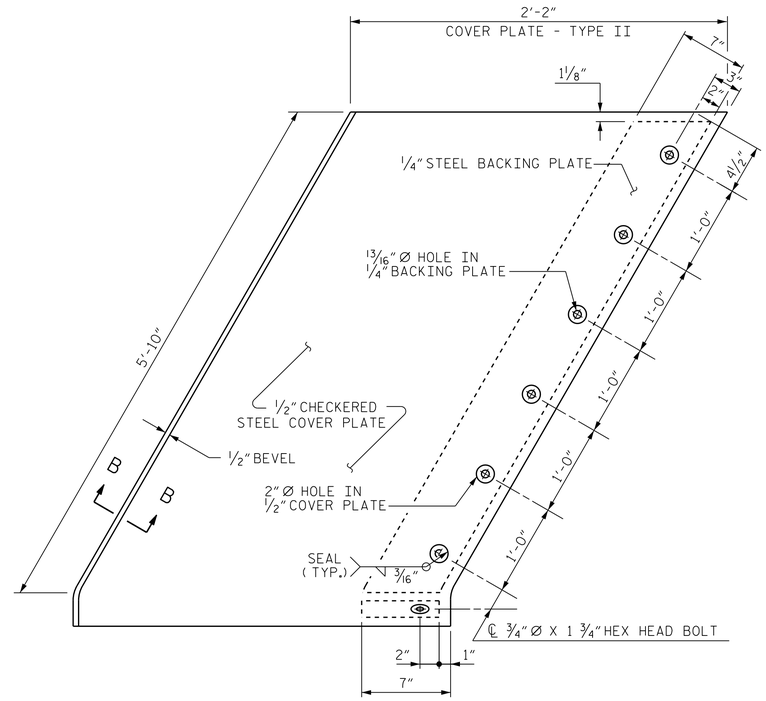

TYPE II - PLAN VIEW

COVER PLATE DETAILS

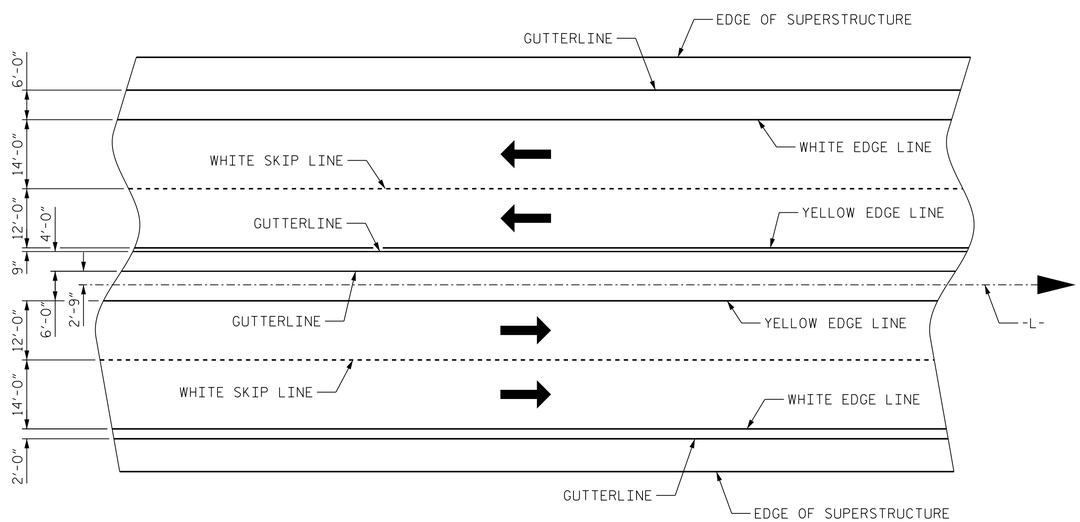

PAVEMENT MARKING ALIGNMENT

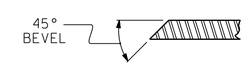

SECTION B-B

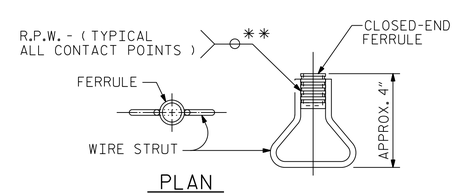

PLAN

ELEVATION

CONCRETE INSERT

** EACH WELDED ATTACHMENT OF WIRE TO FERRULE SHALL DEVELOP THE TENSILE STRENGTH OF THE WIRE.

PROJECT NO. B-4565

LENOIR COUNTY

STATION: 20+17.50 -L-

SHEET 3 OF 3

STATE OF NORTH CAROLINA
DEPARTMENT OF TRANSPORTATION
RALEIGH

STANDARD

EXPANSION JOINT SEAL DETAILS FOR SIDEWALK

NORTH CAROLINA PROFESSIONAL SEAL 027799 ENGINEER ALLYSON K. ORR
11/13/2014

MI ENGINEERING
1011 SCHAUB DRIVE, SUITE 100
RALEIGH, NC 27606
(919) 851-6606
FIRM PE NUMBER : P-0671

REVISIONS							
NO.	BY:	DATE:	NO.	BY:	DATE:		
1			3				
2			4				

SHEET NO. S-36

TOTAL SHEETS 118

ASSEMBLED BY:	B.E. LANNING	DATE:	08/14
CHECKED BY :	A.K. ORR	DATE:	08/14
DESIGN ENGINEER OF RECORD:	A.K. ORR	DATE:	10/14
DRAWN BY : REK 10/87	REV. 10/17/00	RWW/LES	
CHECKED BY : CRK 1/88	REV. 5/1/06	TLA/GM	
	REV. 10/1/11	MAA/GM	

STD. NO. EJS4 SHT 2

11/13/2014
1:22:07 PM
User: blanning
Filename: P:\NC Bridges\MI4001.01 - B-4565 Lenoir\Site 1\Structures\401_180_S01_B4565_SMU_EJ03.dgn