DocuSign Envelope ID: A67ABEF4-0DAE-48C7-97EB-263367BB90D4

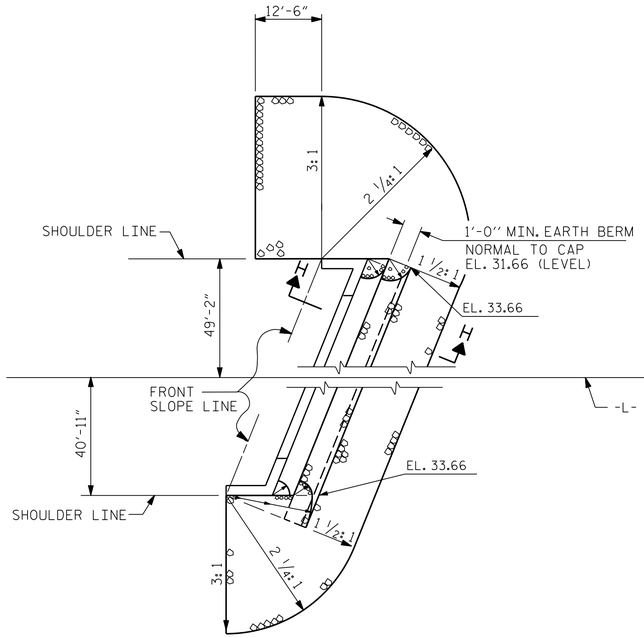

@ END BENT 1

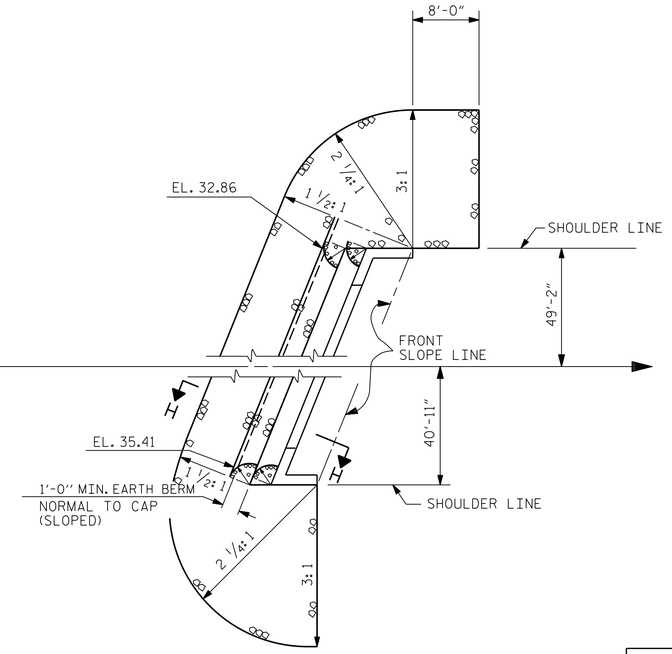

@ END BENT 2

PLAN

ESTIMATED QUANTITIES		
BRIDGE @ STA. 20+17.50 -L-	RIP RAP CLASS II (2'-0" THICK)	GEOTEXTILE FOR DRAINAGE
	TONS	SQUARE YARDS
END BENT 1	289	321
END BENT 2	361	401

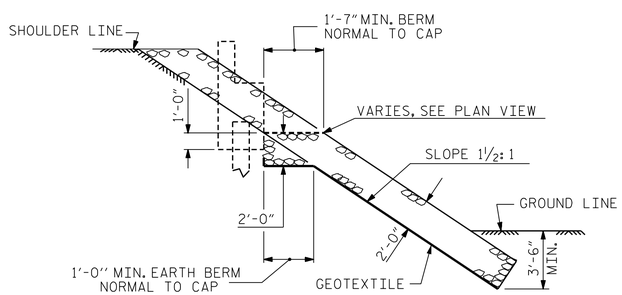

SECTION H-H

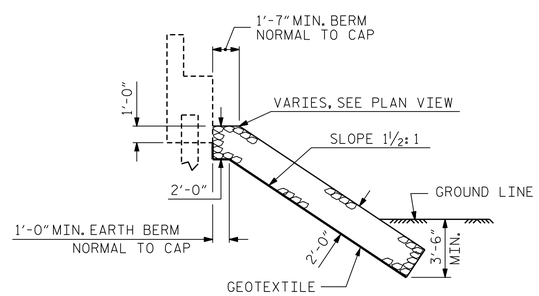

℄ SECTION
BERM RIP RAPPED

PROJECT NO. B-4565
LENOIR COUNTY
STATION: 20+17.50 -L-

STATE OF NORTH CAROLINA
DEPARTMENT OF TRANSPORTATION
RALEIGH

RIP RAP DETAILS

NORTH CAROLINA PROFESSIONAL ENGINEER SEAL 027799 ENGINEER ALLYSON K. ORR
11/13/2014

MI ENGINEERING
1011 SCHAUB DRIVE, SUITE 100
RALEIGH, NC 27606
(919) 851-6606
FIRM PE NUMBER : P-0671

REVISIONS							SHEET NO.
NO.	BY:	DATE:	NO.	BY:	DATE:		S-55
1			3				TOTAL SHEETS
2			4				118

DRAWN BY : B.E. ATKINSON DATE : 08/14
CHECKED BY : A.K. ORR DATE : 09/14
DESIGN ENGINEER OF RECORD : A.K. ORR DATE : 10/14

11/13/2014
1:22:46 PM
User: blanning
Filename: P:\NC Bridges\MI4001.01 - B-4565 Lenoir\Site 1\Structures\401_270_S01_B4565_SMU_RR01.dgn