DocuSign Envelope ID: 3CE1C932-0D3A-44FE-9A7F-9CBA8681CC81

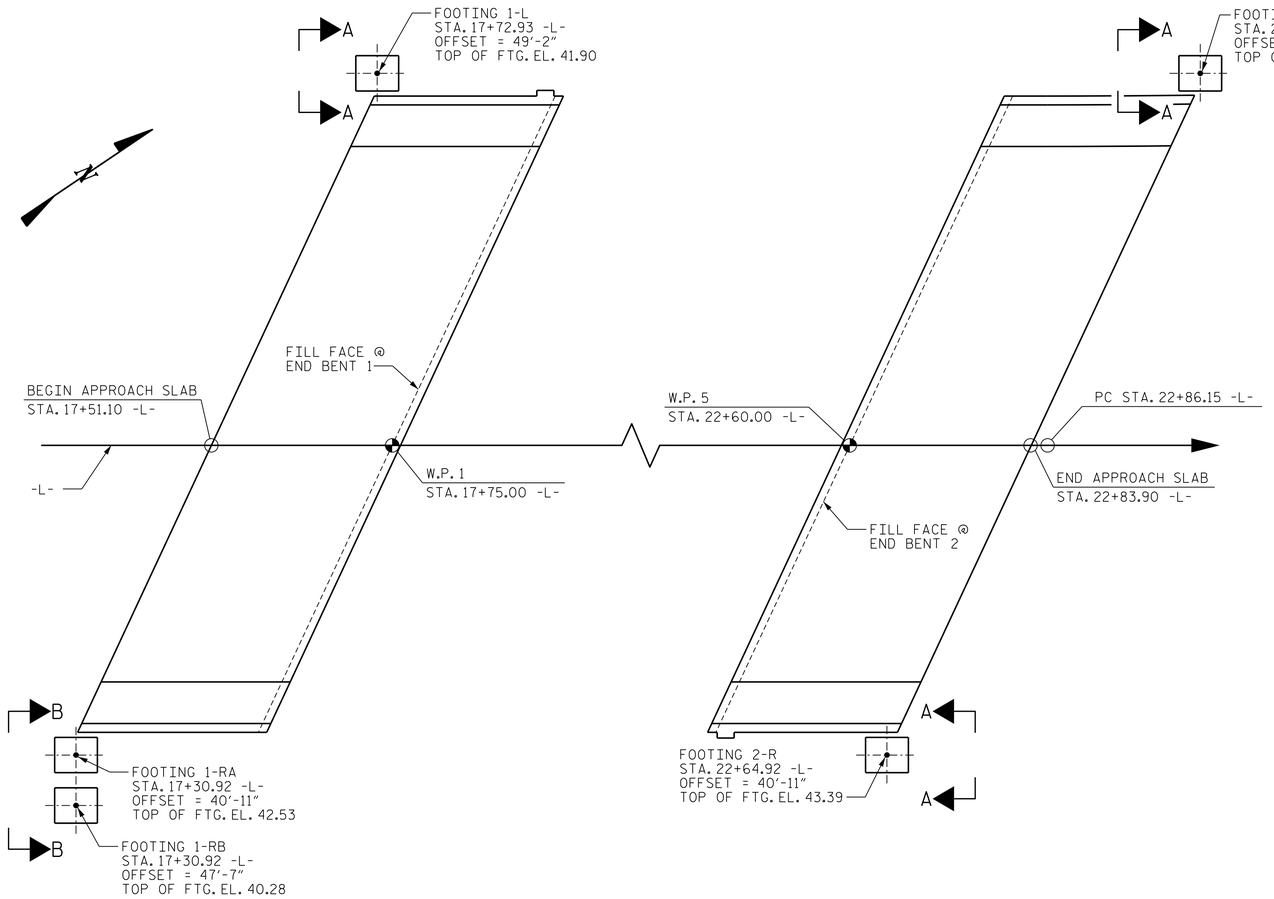

@ END BENT 1

PLAN

@ END BENT 2

NOTES

FOUNDATION MATERIAL SHALL HAVE A MINIMUM BEARING RESISTANCE OF 2.0 KSF.

FOR PLINTH DIMENSIONS, DETAILS AND EMBEDDED COLUMN BARS, SEE ARCHITECTURAL PLANS.

FOR ARCHITECTURAL PLINTH FOOTING, SEE SPECIAL PROVISIONS.

CONSTRUCTION OF THE ARCHITECTURAL ELEMENTS SHALL NOT BEGIN UNTIL THE FOOTING CONCRETE HAS REACHED A COMPRESSIVE STRENGTH OF 3000 PSI.

BILL OF MATERIAL
FOR ONE FOOTING (5 REQ'D.)

BAR	NO.	SIZE	TYPE	LENGTH	WEIGHT
T1	14	#4	STR	4'-9"	44
T2	12	#4	STR	3'-10"	31
REINFORCING STEEL				LBS.	75
CLASS A CONCRETE				C. Y.	1.0

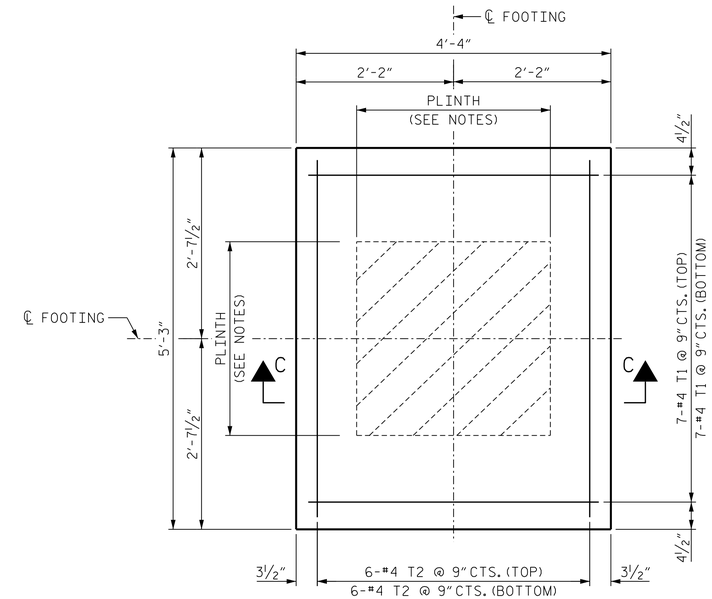

FOOTING PLAN

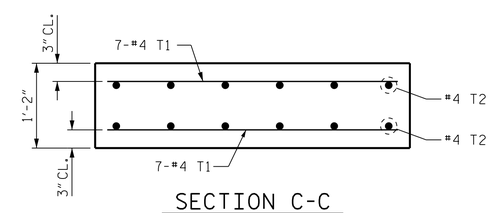

SECTION C-C

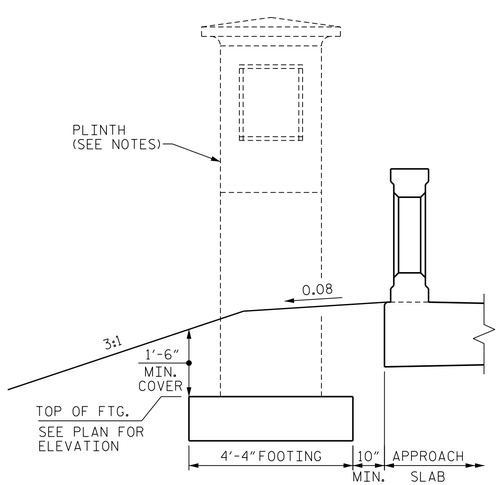

VIEW A-A

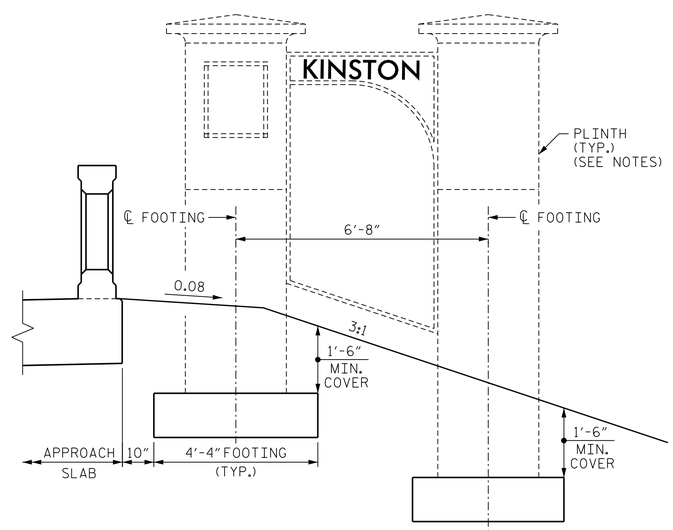

VIEW B-B

FOR TOP OF FOOTING ELEVATION, SEE PLAN VIEW.

PROJECT NO. B-4565

LENOIR COUNTY

STATION: 20+17.50 -L-

STATE OF NORTH CAROLINA
DEPARTMENT OF TRANSPORTATION
RALEIGH

FOOTING DETAILS FOR ARCHITECTURAL ELEMENTS

NORTH CAROLINA PROFESSIONAL SEAL 027799 ENGINEER ALLYSON K. ORR
11/17/2014

MI ENGINEERING
1011 SCHAUB DRIVE, SUITE 100
RALEIGH, NC 27606
(919) 851-6606
FIRM PE NUMBER : P-0671

REVISIONS						
NO.	BY:	DATE:	NO.	BY:	DATE:	
1			3			
2			4			

SHEET NO. S-60
TOTAL SHEETS 118

DRAWN BY : B.E. LANNING DATE : 09/14
CHECKED BY : A.K. ORR DATE : 09/14
DESIGN ENGINEER OF RECORD : A.K. ORR DATE : 10/14

11/17/2014
2:38:28 PM
User: blanning
Filename: P:\NC Bridges\M1400.01 - B-4565 Lenoir\Site 1\Structures\401_295_S01_B4565_SMU_PLDTL01.dgn