DocuSign Envelope ID: A67ABEF4-0DAE-48C7-97EB-263367BB90D4

REINFORCING BAR SCHEDULE

BAR	NO.	SIZE	TYPE	LENGTH	WEIGHT
✳ A1	1634	# 5	STR	43' - 2''	73567
A2	1634	# 5	STR	43' - 2''	73567
✳ A101	4	# 5	STR	42' - 9''	178
✳ A102	4	# 5	STR	42' - 2''	176
✳ A103	4	# 5	STR	41' - 7''	173
✳ A104	4	# 5	STR	41' - 0''	171
✳ A105	4	# 5	STR	40' - 5''	169
✳ A106	4	# 5	STR	39' - 10''	166
✳ A107	4	# 5	STR	39' - 3''	164
✳ A108	4	# 5	STR	38' - 8''	161
✳ A109	4	# 5	STR	38' - 1''	159
✳ A110	4	# 5	STR	37' - 6''	156
✳ A111	4	# 5	STR	36' - 11''	154
✳ A112	4	# 5	STR	36' - 4''	152
✳ A113	4	# 5	STR	35' - 9''	149
✳ A114	4	# 5	STR	35' - 2''	147
✳ A115	4	# 5	STR	34' - 7''	144
✳ A116	4	# 5	STR	34' - 0''	142
✳ A117	4	# 5	STR	33' - 5''	139
✳ A118	4	# 5	STR	32' - 10''	137
✳ A119	4	# 5	STR	32' - 3''	135
✳ A120	4	# 5	STR	31' - 8''	132
✳ A121	4	# 5	STR	31' - 1''	130
✳ A122	2	# 5	STR	58' - 5''	122
✳ A123	2	# 5	STR	57' - 3''	119
✳ A124	2	# 5	STR	56' - 2''	117
✳ A125	2	# 5	STR	55' - 0''	115
✳ A126	2	# 5	STR	53' - 10''	112
✳ A127	2	# 5	STR	52' - 8''	110
✳ A128	2	# 5	STR	51' - 6''	107
✳ A129	2	# 5	STR	50' - 4''	105
✳ A130	2	# 5	STR	49' - 2''	103
✳ A131	2	# 5	STR	48' - 0''	100
✳ A132	2	# 5	STR	46' - 10''	98
✳ A133	2	# 5	STR	45' - 8''	95
✳ A134	2	# 5	STR	44' - 6''	93
✳ A135	2	# 5	STR	43' - 4''	90
✳ A136	2	# 5	STR	42' - 2''	88
✳ A137	2	# 5	STR	41' - 0''	86
✳ A138	2	# 5	STR	39' - 10''	83
✳ A139	2	# 5	STR	38' - 8''	81
✳ A140	2	# 5	STR	37' - 6''	78
✳ A141	2	# 5	STR	36' - 5''	76
✳ A142	2	# 5	STR	35' - 3''	74
✳ A143	2	# 5	STR	34' - 1''	71
✳ A144	2	# 5	STR	32' - 11''	69
✳ A145	2	# 5	STR	31' - 9''	66
✳ A146	2	# 5	STR	30' - 7''	64
✳ A147	2	# 5	STR	29' - 5''	61
✳ A148	2	# 5	STR	28' - 3''	59
✳ A149	2	# 5	STR	27' - 1''	56
✳ A150	2	# 5	STR	25' - 11''	54
✳ A151	2	# 5	STR	24' - 9''	52
✳ A152	2	# 5	STR	23' - 7''	49
✳ A153	2	# 5	STR	22' - 5''	47
✳ A154	2	# 5	STR	21' - 3''	44
✳ A155	2	# 5	STR	20' - 1''	42
✳ A156	2	# 5	STR	18' - 11''	39
✳ A157	2	# 5	STR	17' - 10''	37
✳ A158	2	# 5	STR	16' - 8''	35
✳ A159	2	# 5	STR	15' - 6''	32
✳ A160	2	# 5	STR	14' - 4''	30
✳ A161	2	# 5	STR	13' - 2''	27
✳ A162	2	# 5	STR	12' - 0''	25
✳ A163	2	# 5	STR	10' - 10''	23
✳ A164	2	# 5	STR	9' - 8''	20
✳ A165	2	# 5	STR	8' - 6''	18
✳ A166	2	# 5	STR	7' - 4''	15
✳ A167	2	# 5	STR	6' - 2''	13
✳ A168	2	# 5	STR	5' - 0''	10
✳ A169	2	# 5	STR	3' - 10''	8

BAR	NO.	SIZE	TYPE	LENGTH	WEIGHT
A201	4	# 5	STR	43' - 0''	179
A202	4	# 5	STR	42' - 5''	177
A203	4	# 5	STR	41' - 10''	175
A204	4	# 5	STR	41' - 3''	172
A205	4	# 5	STR	40' - 8''	170
A206	4	# 5	STR	40' - 1''	167
A207	4	# 5	STR	39' - 6''	165
A208	4	# 5	STR	38' - 11''	162
A209	4	# 5	STR	38' - 4''	160
A210	4	# 5	STR	37' - 9''	157
A211	4	# 5	STR	37' - 2''	155
A212	4	# 5	STR	36' - 7''	153
A213	4	# 5	STR	36' - 0''	150
A214	4	# 5	STR	35' - 5''	148
A215	4	# 5	STR	34' - 10''	145
A216	4	# 5	STR	34' - 3''	143
A217	4	# 5	STR	33' - 8''	140
A218	4	# 5	STR	33' - 1''	138
A219	4	# 5	STR	32' - 6''	136
A220	4	# 5	STR	31' - 11''	133
A221	4	# 5	STR	31' - 4''	131
A222	2	# 5	STR	59' - 3''	124
A223	2	# 5	STR	58' - 2''	121
A224	2	# 5	STR	57' - 0''	119
A225	2	# 5	STR	55' - 10''	116
A226	2	# 5	STR	54' - 8''	114
A227	2	# 5	STR	53' - 6''	112
A228	2	# 5	STR	52' - 4''	109
A229	2	# 5	STR	51' - 2''	107
A230	2	# 5	STR	50' - 0''	104
A231	2	# 5	STR	48' - 10''	102
A232	2	# 5	STR	47' - 8''	99
A233	2	# 5	STR	46' - 6''	97
A234	2	# 5	STR	45' - 4''	95
A235	2	# 5	STR	44' - 2''	92
A236	2	# 5	STR	43' - 0''	90
A237	2	# 5	STR	41' - 10''	87
A238	2	# 5	STR	40' - 8''	85
A239	2	# 5	STR	39' - 6''	82
A240	2	# 5	STR	38' - 5''	80
A241	2	# 5	STR	37' - 3''	78
A242	2	# 5	STR	36' - 1''	75
A243	2	# 5	STR	34' - 11''	73
A244	2	# 5	STR	33' - 9''	70
A245	2	# 5	STR	32' - 7''	68
A246	2	# 5	STR	31' - 5''	66
A247	2	# 5	STR	30' - 3''	63
A248	2	# 5	STR	29' - 1''	61
A249	2	# 5	STR	27' - 11''	58
A250	2	# 5	STR	26' - 9''	56
A251	2	# 5	STR	25' - 7''	53
A252	2	# 5	STR	24' - 5''	51
A253	2	# 5	STR	23' - 3''	48
A254	2	# 5	STR	22' - 1''	46
A255	2	# 5	STR	20' - 11''	44
A256	2	# 5	STR	19' - 10''	41
A257	2	# 5	STR	18' - 8''	39
A258	2	# 5	STR	17' - 6''	37
A259	2	# 5	STR	16' - 4''	34
A260	2	# 5	STR	15' - 2''	32
A261	2	# 5	STR	14' - 0''	29
A262	2	# 5	STR	12' - 10''	27
A263	2	# 5	STR	11' - 8''	24
A264	2	# 5	STR	10' - 6''	22
A265	2	# 5	STR	9' - 4''	19
A266	2	# 5	STR	8' - 2''	17
A267	2	# 5	STR	7' - 0''	15
A268	2	# 5	STR	5' - 10''	12
A269	2	# 5	STR	4' - 8''	10

BAR	NO.	SIZE	TYPE	LENGTH	WEIGHT
B1	810	# 5	STR	55' - 7''	46958
✳ B2	174	# 4	STR	25' - 9''	2993
✳ B3	522	# 7	STR	31' - 10''	33965
✳ B4	165	# 7	STR	48' - 0''	16188
✳ B5	201	# 7	STR	37' - 6''	15407
✳ B6	116	# 4	STR	23' - 0''	1782
✳ B7	174	# 4	STR	27' - 5''	3187
✳ G1	4	# 5	STR	47' - 6''	198
✳ J1	156	# 4	2	1' - 5''	148
✳ K1	8	# 8	1	15' - 4''	328
✳ K2	24	# 8	7	23' - 4''	1495
✳ K3	56	# 4	STR	9' - 10''	368
✳ K4	42	# 6	STR	7' -9''	489
✳ K5	42	# 4	STR	7' - 5''	208
✳ K6	210	# 4	STR	11' - 1''	1555
✳ K7	42	# 4	STR	7' -9''	217
✳ K8	42	# 4	5	7' - 4''	206
✳ K9	126	# 4	6	14' - 5''	1213
✳ S1	28	# 5	3	3' - 6''	102
✳ S2	112	# 5	3	6' - 0''	701
✳ S3	112	# 4	4	4' - 7''	343
S4	1134	# 4	9	2' - 9''	2083
U1	147	# 4	7	17' - 10''	1751
U2	84	# 4	8	11' - 1''	622

✳ EPOXY COATED REINFORCING STEEL LBS. 161,012

REINFORCING STEEL LBS. 131,440

BAR TYPES

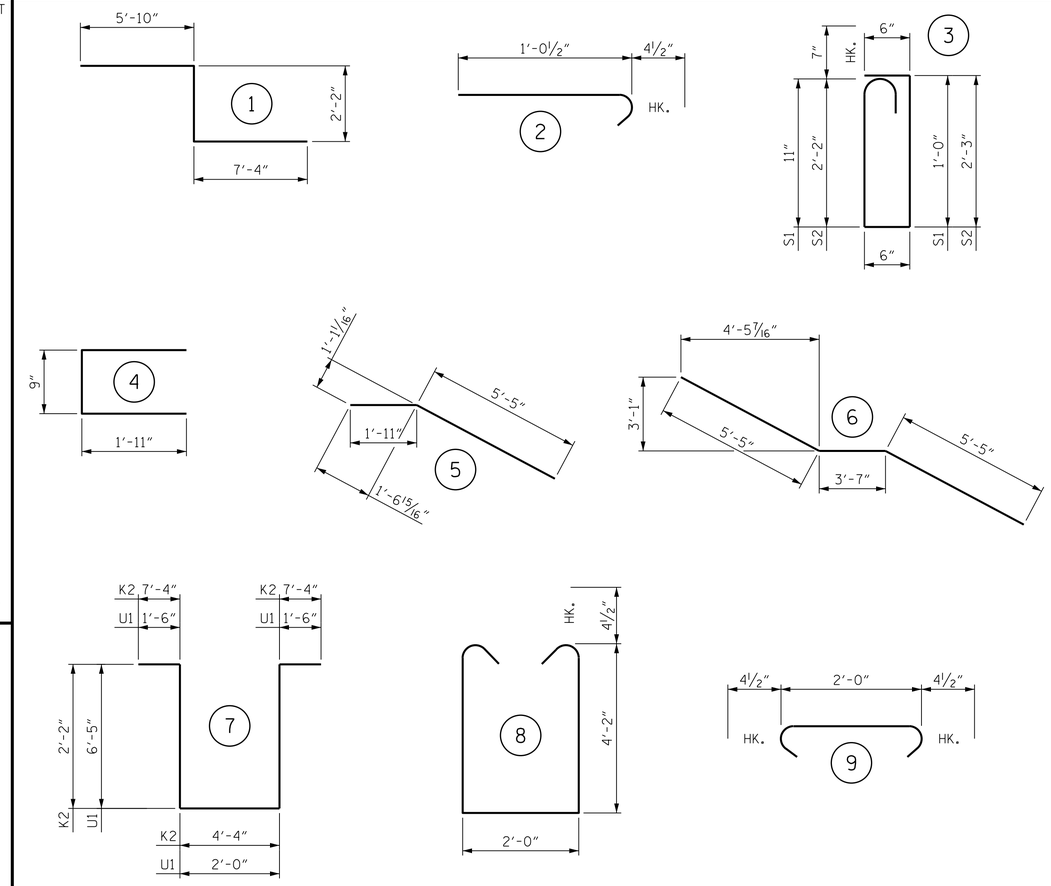

ALL BAR DIMENSIONS ARE OUT TO OUT.

SUPERSTRUCTURE REINFORCING STEEL LENGTHS ARE BASED ON THE FOLLOWING MINIMUM SPLICE LENGTHS					
BAR SIZE	SUPERSTRUCTURE EXCEPT APPROACH SLABS, PARAPET, AND BARRIER RAIL		APPROACH SLABS		PARAPET AND BARRIER RAIL
	EPOXY COATED	UNCOATED	EPOXY COATED	UNCOATED	
#4	2'-0"	1'-9"	2'-0"	1'-9"	2'-9"
#5	2'-6"	2'-2"	2'-6"	2'-2"	3'-5"
#6	3'-0"	2'-7"	3'-10"	2'-7"	4'-4"
#7	5'-3"	3'-6"			
#8	6'-10"	4'-7"			

PROJECT NO. B-4565

LENOIR COUNTY

STATION: 20+17.50 -L-

SHEET 2 OF 2

STATE OF NORTH CAROLINA
DEPARTMENT OF TRANSPORTATION
RALEIGH

STANDARD

SUPERSTRUCTURE BILL OF MATERIAL

NORTH CAROLINA PROFESSIONAL SEAL 027799 ENGINEER ALLYSON K. ORR

11/13/2014

MI ENGINEERING
1011 SCHAUB DRIVE, SUITE 100
RALEIGH, NC 27606
(919) 851-6606
FIRM PE NUMBER : P-0671

REVISIONS						
NO.	BY:	DATE:	NO.	BY:	DATE:	
1			3			
2			4			

SHEET NO. S-39

TOTAL SHEETS 118

STD. NO. BOM2

ASSEMBLED BY: B.E. LANNING DATE: 09/14
CHECKED BY : A.K. ORR DATE: 09/14
DESIGN ENGINEER OF RECORD: A.K. ORR DATE: 10/14

DRAWN BY : JMB 5/87
CHECKED BY : SJD 9/87

REV. 8/16/99 RWW/LES
REV. 5/1/06 TLA/GM
REV. 10/1/11 MAA/GM

11/13/2014
1:22:11 PM
User: blanning
Filename: P:\NC Bridges\MI4001.01 - B-4565 Lenoir\Site 1\Structures\401.190.S01.B4565.SMU.BOM02.dgn