DocuSign Envelope ID: A67ABEF4-0DAE-48C7-97EB-263367BB90D4

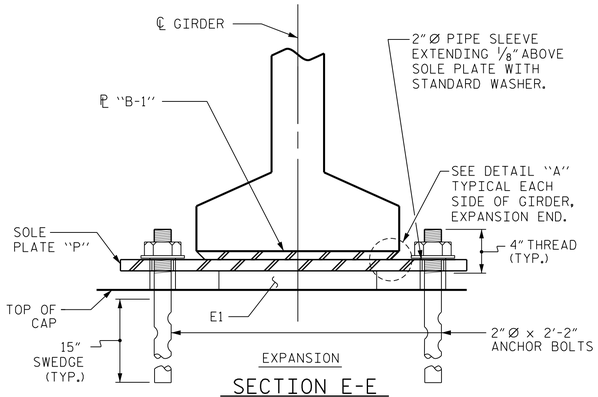

SECTION E-E

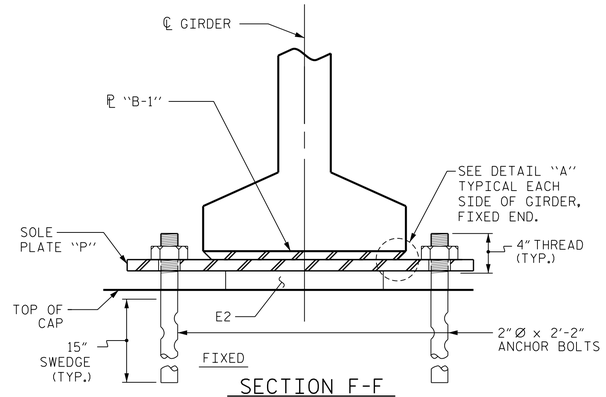

SECTION F-F

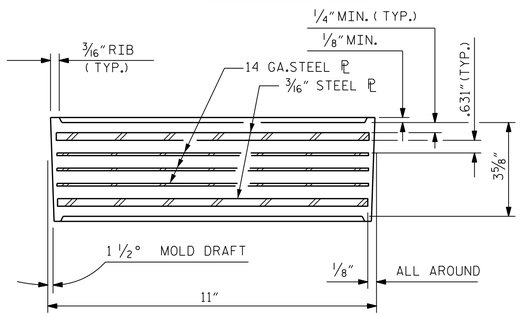

TYPICAL SECTION OF ELASTOMERIC BEARINGS

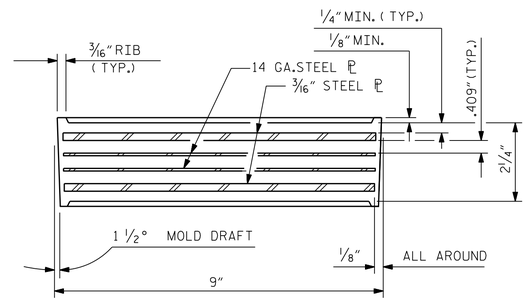

TYPICAL SECTION OF ELASTOMERIC BEARINGS

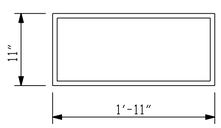

E1 (16 REQ'D.)

PLAN VIEW OF ELASTOMERIC BEARING

CUSTOM TYPE BEARING

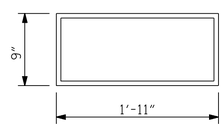

E2 (48 REQ'D.)

PLAN VIEW OF ELASTOMERIC BEARING

TYPE V

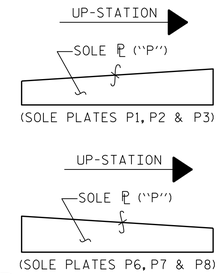

SOLE ℗ PLACEMENT DETAILS

NOTES

AT ALL FIXED POINTS OF SUPPORT, NUTS FOR ANCHOR BOLTS ARE TO BE TIGHTENED FINGER TIGHT AND THEN BACKED OFF 1/2 TURN. THE THREAD OF THE NUT AND BOLT SHALL THEN BE BURRED WITH A SHARP POINTED TOOL.

THE 2" Ø PIPE SLEEVE SHALL BE CUT FROM SCHEDULE 40 PVC PLASTIC PIPE. THE PVC PLASTIC PIPE SHALL MEET THE REQUIREMENTS OF ASTM D1785.

STEEL SOLE PLATES, ANCHOR BOLTS, NUTS, AND WASHERS SHALL BE GALVANIZED IN ACCORDANCE WITH THE STANDARD SPECIFICATIONS.

PRIOR TO WELDING, GRIND THE GALVANIZED SURFACE OF THE PORTION OF THE EMBEDDED PLATE AND SOLE PLATE THAT ARE TO BE WELDED. AFTER WELDING, DAMAGED GALVANIZED SURFACES SHALL BE REPAIRED IN ACCORDANCE WITH THE STANDARD SPECIFICATIONS.

WHEN WELDING THE SOLE PLATE TO THE EMBEDDED PLATE IN THE GIRDER, USE TEMPERATURE INDICATING WAX PENS, OR OTHER SUITABLE MEANS, TO ENSURE THAT THE TEMPERATURE OF THE SOLE PLATE DOES NOT EXCEED 300°F. TEMPERATURES ABOVE THIS MAY DAMAGE THE ELASTOMER.

SOLE PLATE "P", BOLTS, NUTS, WASHERS, AND PIPE SLEEVE SHALL BE INCLUDED IN THE PAY ITEM FOR PRESTRESSED CONCRETE GIRDERS.

ANCHOR BOLTS SHALL MEET THE REQUIREMENTS OF ASTM A449. NUTS SHALL MEET THE REQUIREMENTS OF AASHTO M291-DH OR AASHTO M292-2H. WASHERS SHALL MEET THE REQUIREMENTS OF AASHTO M293. NO SHOP DRAWINGS ARE REQUIRED FOR ANCHOR BOLTS, NUTS AND WASHERS. SHOP INSPECTION IS REQUIRED.

ALL SURFACES OF BEARING PLATES SHALL BE SMOOTH AND STRAIGHT.

THE ELASTOMER IN THE STEEL REINFORCED BEARINGS SHALL HAVE A SHEAR MODULUS OF 0.160 KSI, IN ACCORDANCE WITH AASHTO M251.

FOR STEEL REINFORCED ELASTOMERIC BEARINGS, SEE SPECIAL PROVISIONS.

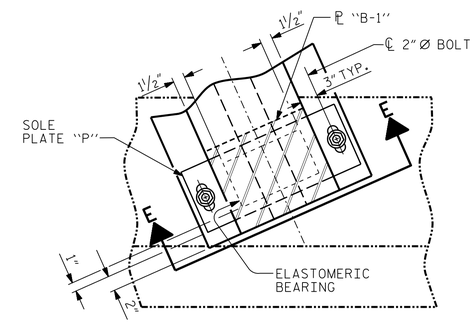

AT END BENTS

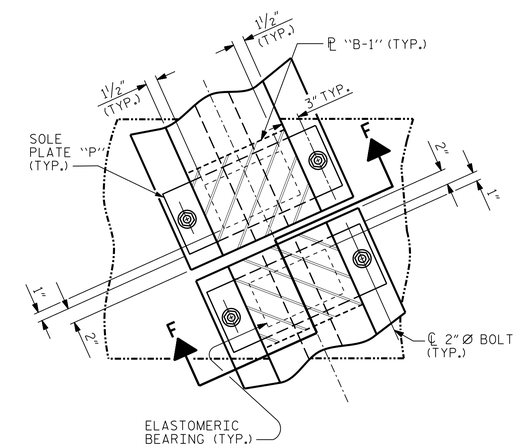

AT CONTINUOUS BENTS

PLAN VIEW

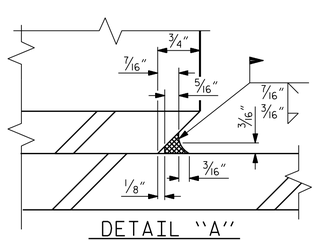

DETAIL "A"

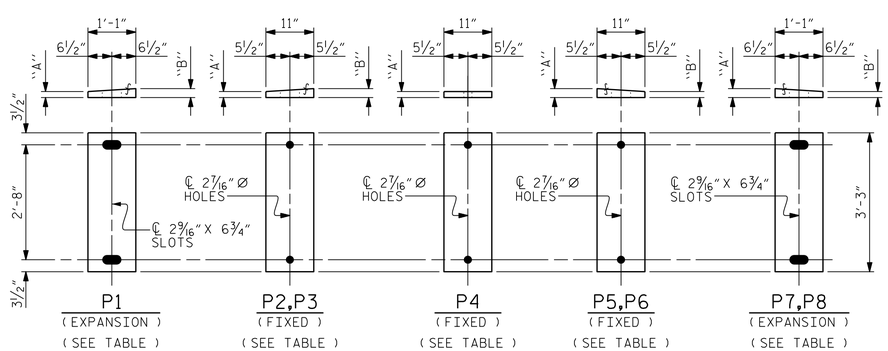

SOLE PLATE DETAILS ("P")

TABLE OF SOLE PLATES				
TYPE	F/E *	"A" (IN.)	"B" (IN.)	NO.
P1	E	1 3/8"	1 5/8"	8
P2	F	1 11/16"	1 13/16"	8
P3	F	1 7/16"	1 9/16"	8
P4	F	1 1/2"	1 1/2"	19
P5	F	1 9/16"	1 7/16"	5
P6	F	1 13/16"	1 11/16"	8
P7	E	1 5/8"	1 3/8"	5
P8	E	1 9/16"	1 7/16"	3

* DENOTES FIXED OR EXPANSION.

MAXIMUM ALLOWABLE SERVICE LOADS	
D.L.+L.L. (NO IMPACT)	
CUSTOM	300 k
TYPE V	365 k

PROJECT NO. B-4565

LENOIR COUNTY

STATION: 20+17.50 -L-

NORTH CAROLINA PROFESSIONAL SEAL 027799 ENGINEER ALLYSON K. ORR

11/13/2014

STATE OF NORTH CAROLINA
DEPARTMENT OF TRANSPORTATION
RALEIGH

SUPERSTRUCTURE

ELASTOMERIC BEARING DETAILS

MI ENGINEERING
1011 SCHAUB DRIVE, SUITE 100
RALEIGH, NC 27606
(919) 851-6606
FIRM PE NUMBER : P-0671

REVISIONS								SHEET NO.
NO.	BY:	DATE:	NO.	BY:	DATE:			S-24
1			3					TOTAL SHEETS
2			4					118

DRAWN BY :	B.E. LANNING	DATE :	08/14
CHECKED BY :	G.R. COLS	DATE :	08/14
DESIGN ENGINEER OF RECORD :	A.K. ORR	DATE :	10/14

11/13/2014
1:21:41 PM
User: blanning
Filename: P:\NC Bridges\MI4001.01 - B-4565 Lenoir\Site 1\Structures\401_120_S01_B4565_SMU_B001.dgn