DocuSign Envelope ID: A67ABEF4-0DAE-48C7-97EB-263367BB90D4

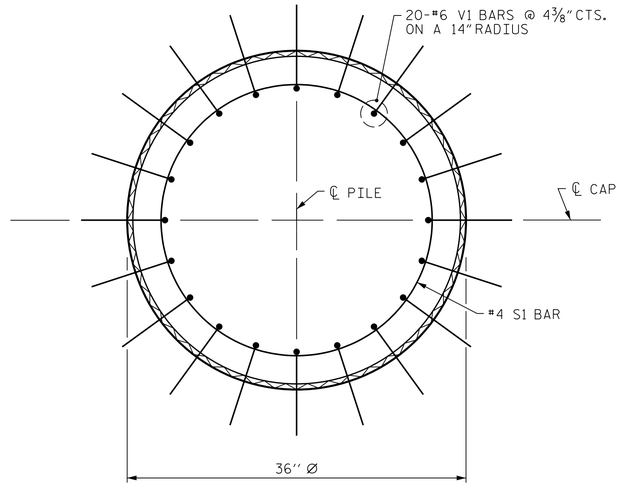

PLAN

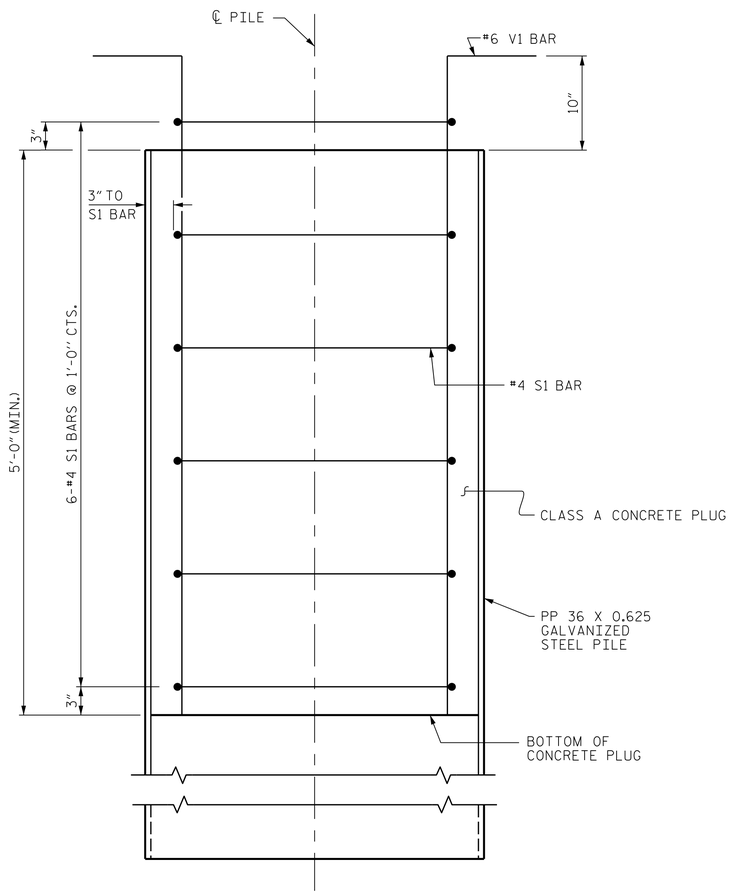

ELEVATION

PP 36 X 0.625 GALVANIZED STEEL PILE

NOTES

PIPE PILES SHALL BE IN ACCORDANCE WITH SECTION 1084 OF THE STANDARD SPECIFICATIONS.

GALVANIZE STEEL PIPE PILES IN ACCORDANCE WITH SECTION 1076 OF THE STANDARD SPECIFICATIONS UNLESS METALLIZING IS REQUIRED.

REMOVE AND REPLACE OR REPAIR TO THE SATISFACTION OF THE ENGINEER PILES THAT ARE DAMAGED, DEFORMED OR COLLAPSED DURING INSTALLATION OR DRIVING.

PILE SPLICES SHALL BE IN ACCORDANCE WITH THE STANDARD SPECIFICATIONS AND AWS D1.1.

FOR OPEN END PIPE PILES, REMOVE ENOUGH SOIL AND WATER FROM INSIDE THE PILES TO CONSTRUCT THE CONCRETE PLUG WITHOUT FOULING THE CONCRETE.

FORM THE CONCRETE PLUG SUCH THAT THE REINFORCING STEEL OR CONCRETE DOES NOT MOVE AND THE CLEARANCE FROM THE REINFORCING STEEL TO THE INSIDE OF THE PILE IS MAINTAINED AFTER CONCRETE PLACEMENT. DO NOT PLACE CONCRETE IN THE BENT CAP UNTIL THE CONCRETE PLUG HAS ATTAINED A MINIMUM COMPRESSIVE STRENGTH OF 1500 PSI.

THE REINFORCING STEEL, CLASS A CONCRETE, AND GALVANIZING ARE CONSIDERED INCIDENTAL TO THE CONTRACT UNIT PRICE BID PER LINEAR FOOT FOR PP 36 X 0.625 GALVANIZED STEEL PILES.

BILL OF MATERIAL FOR ONE PP 36 X 0.625 GALVANIZED STEEL PILE

BAR	NO.	SIZE	TYPE	LENGTH	WEIGHT
S1	6	#4	1	9'-2"	37
V1	20	#6	2	6'-10"	205
REINFORCING STEEL =					242 lbs

CLASS A CONCRETE

5'-0" MINIMUM PLUG 1.2 CY

BAR TYPES

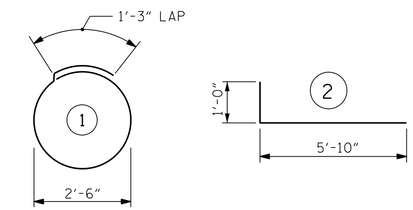

ALL BAR DIMENSIONS ARE OUT TO OUT.

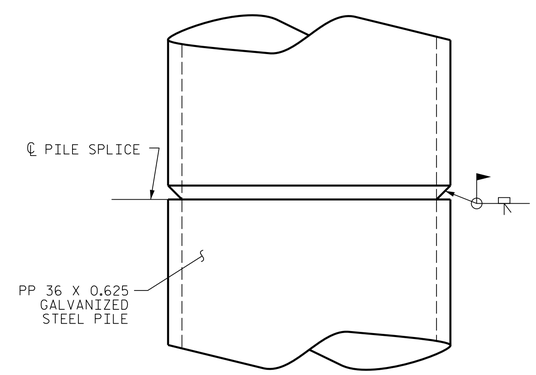

PIPE PILE SPLICE DETAIL

PROJECT NO. B-4565

LENOIR COUNTY

STATION: 20+17.50 -L-

STATE OF NORTH CAROLINA
DEPARTMENT OF TRANSPORTATION
RALEIGH

36" STEEL PIPE PILE

NORTH CAROLINA PROFESSIONAL SEAL 027799 ENGINEER ALLYSON K. DIRR
11/13/2014

MI ENGINEERING
1011 SCHAUB DRIVE, SUITE 100
RALEIGH, NC 27606
(919) 851-6606
FIRM PE NUMBER : P-0671

REVISIONS							
NO.	BY:	DATE:	NO.	BY:	DATE:	SHEET NO.	S-54
1			3			TOTAL SHEETS	118
2			4				

DRAWN BY :	J.S. ISRAELNAIM	DATE :	09/14
CHECKED BY :	G.R. COLS	DATE :	09/14
DESIGN ENGINEER OF RECORD :	P.A. de PAOLI	DATE :	10/14

11/13/2014
1:22:43 PM
User: blanning
Filename: P:\NC Bridges\MI4001.01 - B-4565 Lenoir\Site 1\Structures\401_265_S01_B4565_SMU_SPP01.dgn