DocuSign Envelope ID: A67ABEF4-0DAE-48C7-97EB-263367BB90D4

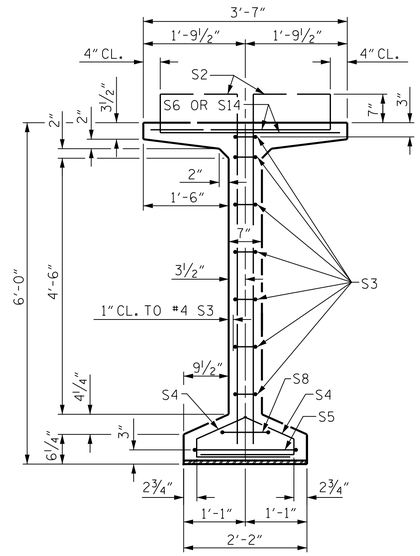

SECTION A-A

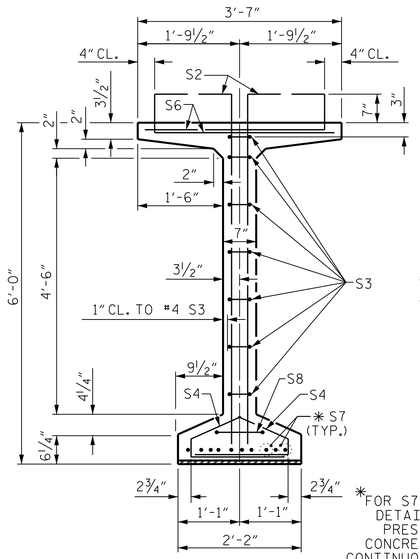

SECTION B-B

✱FOR S7 BARS, SEE DETAIL "C" OF PRESTRESSED CONCRETE GIRDER CONTINUOUS FOR LIVE LOAD DETAILS SHEET

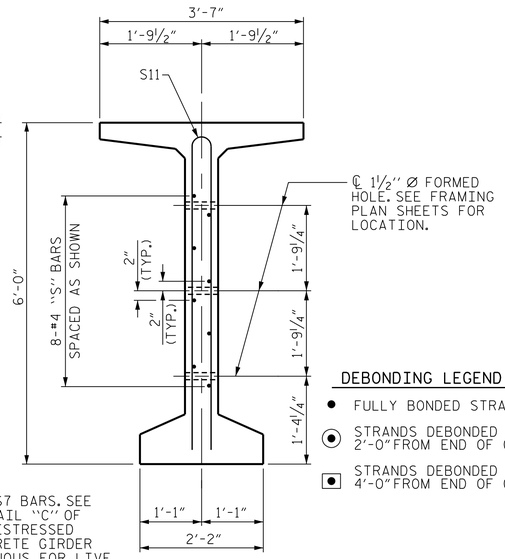

SECTION C-C

(S1, S6 AND S9 BARS NOT SHOWN)

DEBONDING LEGEND

- ● FULLY BONDED STRANDS
- ⊙ STRANDS DEBONDED FOR 2'-0" FROM END OF GIRDER
- ⊡ STRANDS DEBONDED FOR 4'-0" FROM END OF GIRDER

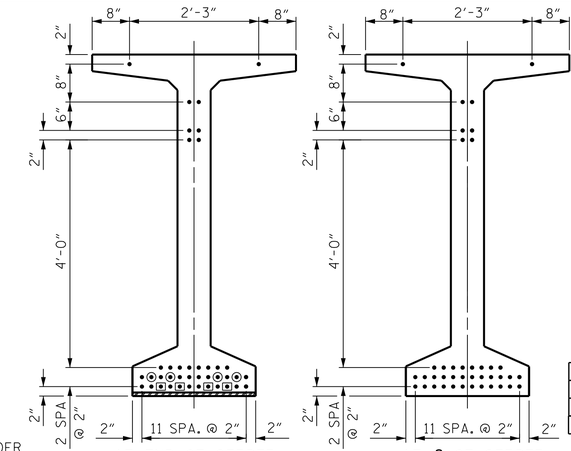

0.6" Ø LOW RELAXATION STRAND LAYOUT

0.6" Ø L. R. GRADE 270 STRANDS

AREA (SQUARE INCHES)	ULTIMATE STRENGTH (LBS. PER STRAND)	APPLIED PRESTRESS (LBS. PER STRAND)
0.217	58,600	43,950

REINFORCING STEEL FOR ONE GDR

	BAR	NUMBER	SIZE	TYPE	LENGTH	WEIGHT
	S1	250	#4	1	6'-10"	1,141
	S2	36	#5	1	6'-10"	257
	S3	14	#4	2	8'-5"	79
	S4	184	#4	3	3'-0"	369
	S5	1	#5	2	9'-10"	10
	S6	284	#5	4	4'-5"	1,308
	✱ S7	10	#5	STR	3'-8"	38
	S8	2	#5	2	9'-0"	19
	S9	30	#5	STR	3'-3"	102
	S10	1	#3	STR	1'-10"	1
INTERIOR GDR.	S11	16	#5	5	11'-6"	192
EXTERIOR GDR.	S11	8	#5	5	11'-6"	96
INTERIOR GDR.	S12	16	#4	STR	13'-2"	141
EXTERIOR GDR.	S13	16	#4	STR	8'-0"	86
	S14	2	#5	4	3'-9"	8

✱NOTE: S7 BARS SHALL BE BENT BEFORE SHIPMENT. HEAT BENDING SHALL NOT BE ALLOWED.

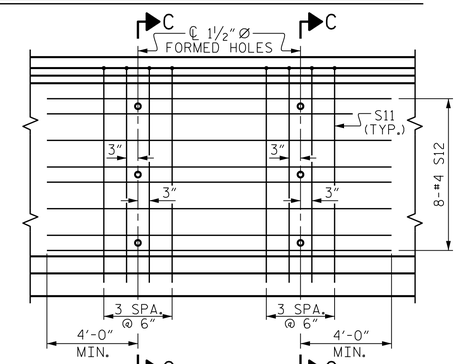

PARTIAL ELEVATION

SHOWING INTERMEDIATE STEEL DIAPHRAGM REINFORCING STEEL FOR GIRDER Nos. D2-D7

BAR TYPES

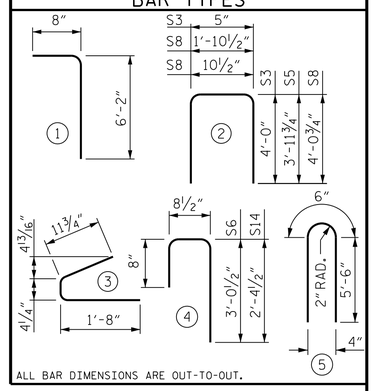

QUANTITIES FOR ONE GIRDER

	REINFORCING STEEL	9000 PSI CONCRETE	0.6" Ø L.R. STRANDS
	LB.	C.Y.	No.
EXTERIOR GIRDER	3514	25.2	40
INTERIOR GIRDER	3665	25.2	40

GIRDERS REQUIRED

NUMBER	LENGTH	TOTAL LENGTH
8	117'-6⅜"	940'-3"

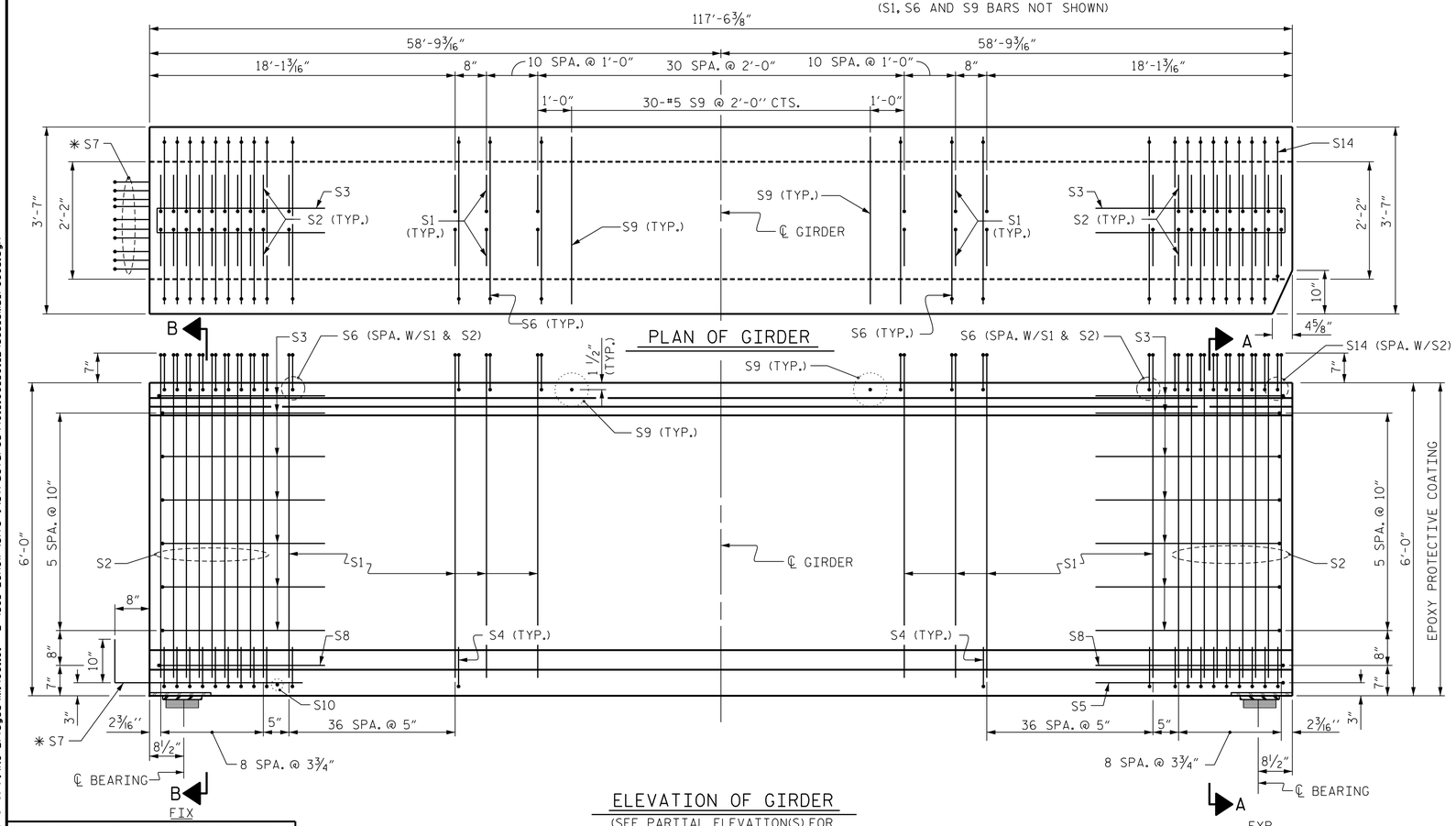

ELEVATION OF GIRDER

(SEE PARTIAL ELEVATION(S) FOR ADDITIONAL "S" BARS)

FOR 1½" Ø FORMED HOLE LOCATION, SEE "FRAMING PLAN - SPAN A & B" SHEET

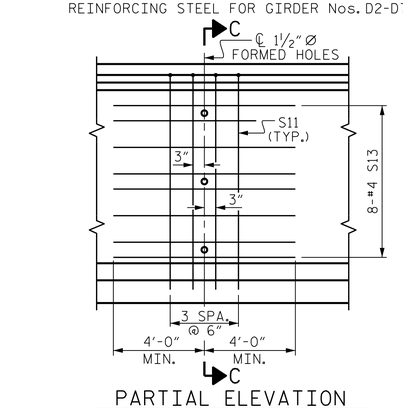

PARTIAL ELEVATION

SHOWING INTERMEDIATE STEEL DIAPHRAGM REINFORCING STEEL FOR GIRDER Nos. D1 & D8

PROJECT NO. B-4565

LENOIR COUNTY

STATION: 20+17.50 -L-

STATE OF NORTH CAROLINA
DEPARTMENT OF TRANSPORTATION
RALEIGH

SUPERSTRUCTURE

72" PRESTRESSED CONCRETE MODIFIED BULB TEE CONTINUOUS FOR LIVE LOAD

SPAN D

NORTH CAROLINA PROFESSIONAL SEAL 027799 ENGINEER ALLYSON K. ORR
11/13/2014

ASSEMBLED BY: J.S. ISRAELNAIM	DATE: 07/14
CHECKED BY : G.R. COLS	DATE: 08/14
DESIGN ENGINEER OF RECORD: A.K. ORR	DATE: 10/14
DRAWN BY : EEM 2/6/97	REV. 5/1/06R TLA/GM
CHECKED BY : VAP 2/6/97	REV. 10/1/11 MAA/GM
	REV. 6/13 MAA/GM

MI ENGINEERING
1011 SCHAUB DRIVE, SUITE 100
RALEIGH, NC 27606
(919) 851-6606
FIRM PE NUMBER : P-0671

REVISIONS						
NO.	BY:	DATE:	NO.	BY:	DATE:	
1			3			
2			4			

SHEET NO. S-20

TOTAL SHEETS 118

STD. NO. PCG8

11/13/2014
1:21:33 PM
User: blanning
Filename: P:\NC Bridges\MI4001.01 - B-4565 Lenoir\Site 1\Structures\401_100_S01_B4565_SMU_PCG03.dgn