DocuSign Envelope ID: A67ABEF4-0DAE-48C7-97EB-263367BB90D4

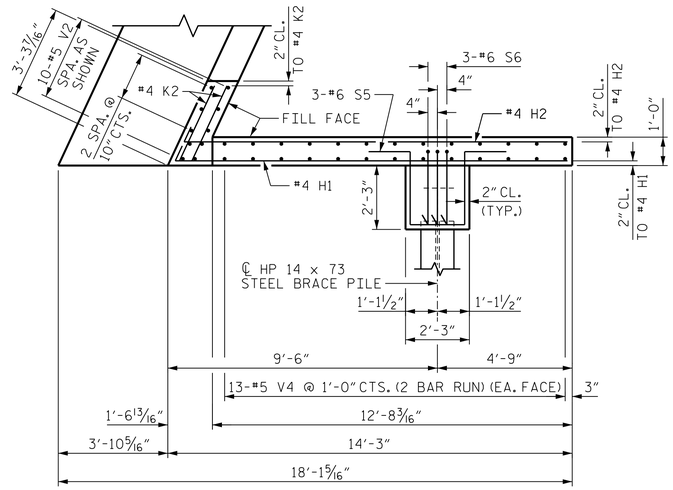

PLAN OF WING (W1)

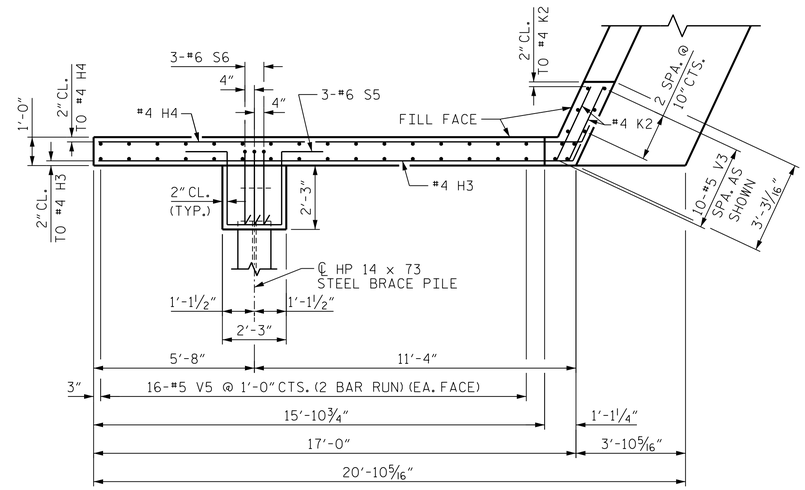

PLAN OF WING (W2)

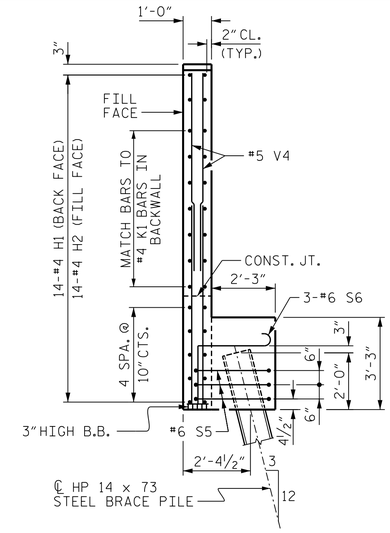

SECTION X-X

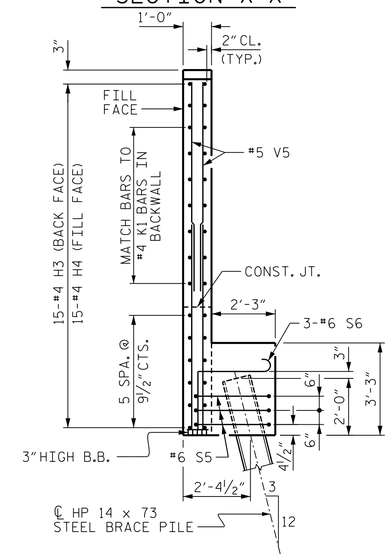

SECTION Y-Y

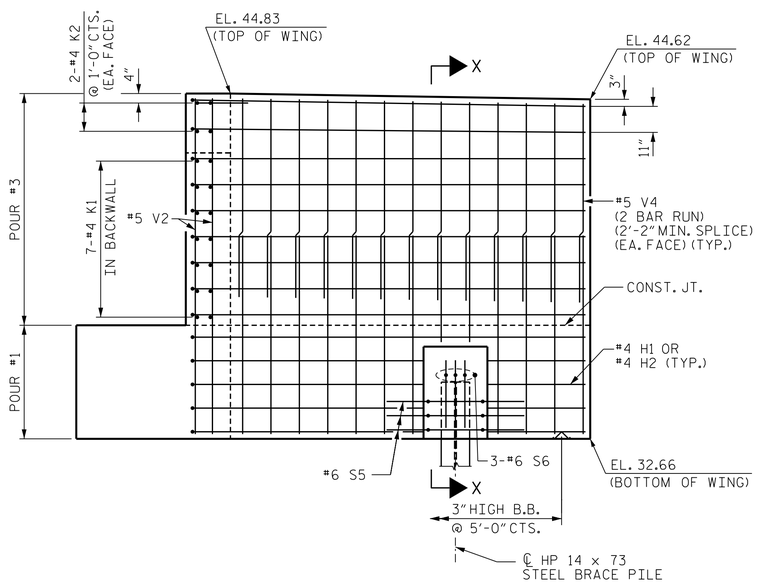

ELEVATION OF WING (W1)

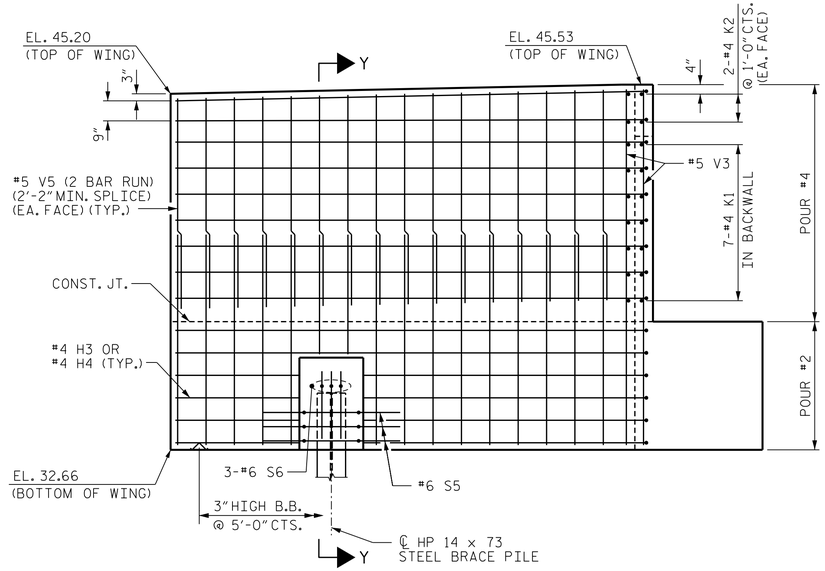

ELEVATION OF WING (W2)

PROJECT NO. B-4565

LENOIR COUNTY

STATION: 20+17.50 -L-

SHEET 3 OF 4

STATE OF NORTH CAROLINA
DEPARTMENT OF TRANSPORTATION
RALEIGH

SUBSTRUCTURE

END BENT 1

NORTH CAROLINA PROFESSIONAL SEAL 027799 ENGINEER ALLYSON K. ORR
11/13/2014

DRAWN BY :	B.E. ATKINSON	DATE :	09/14
CHECKED BY :	P.A. de PAOLI	DATE :	09/14
DESIGN ENGINEER OF RECORD :	A.K. ORR	DATE :	10/14

MI ENGINEERING
1011 SCHAUB DRIVE, SUITE 100
RALEIGH, NC 27606
(919) 851-6606
FIRM PE NUMBER : P-0671

REVISIONS						
NO.	BY:	DATE:	NO.	BY:	DATE:	
1			3			
2			4			

SHEET NO. S-42
TOTAL SHEETS 118

11/13/2014
11:22:18 PM
User: blanning
Filename: P:\NC Bridges\MI4001.01 - B-4565 Lenoir\Site 1\Structures\401_205_501_B4565_SMU_E103.dgn