DocuSign Envelope ID: A67ABEF4-0DAE-48C7-97EB-263367BB90D4

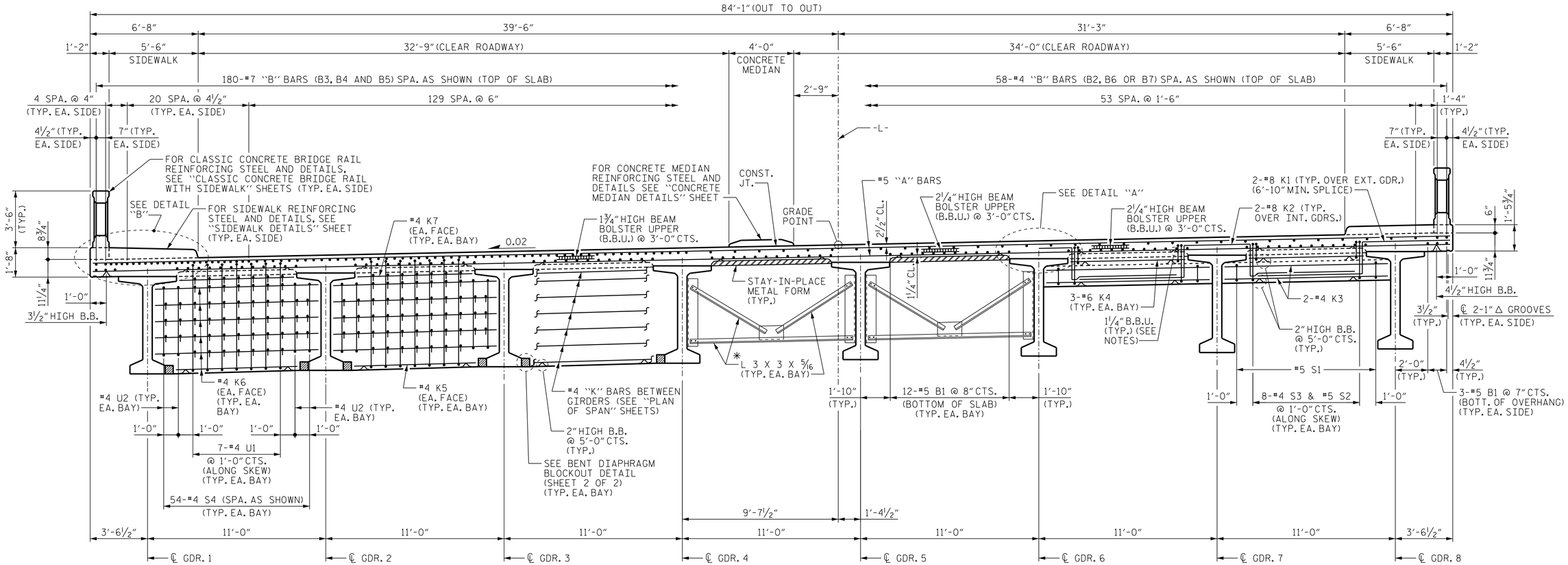

PARTIAL TYPICAL SECTION
SHOWING CONTINUOUS BENT DIAPHRAGM AT BENTS 1, 2 & 3

PARTIAL TYPICAL SECTION
SHOWING INTERMEDIATE DIAPHRAGM

PARTIAL TYPICAL SECTION
SHOWING END DIAPHRAGM AT END BENTS 1 & 2

NOTES

PROVIDE 1¼" HIGH BEAM BOLSTERS UPPER AT 4'-0" CTS. ATOP THE METAL STAY-IN-PLACE FORMS TO SUPPORT THE BOTTOM MAT OF "A" BARS. WHEN USING REMOVABLE FORMS, PROVIDE CONTINUOUS HIGH CHAIRS FOR METAL DECK (C.H.C.M.) @ 4'-0" CTS. WITH A HEIGHT TO SUPPORT THE BOTTOM MAT OF "A" BARS A CLEAR DISTANCE OF 2½" ABOVE THE TOP OF THE REMOVABLE FORM.

LONGITUDINAL STEEL MAY BE SHIFTED SLIGHTLY, AS NECESSARY, TO AVOID INTERFERENCE WITH STIRRUPS IN PRESTRESSED CONCRETE GIRDERS.

PREVIOUSLY CAST CONCRETE IN A CONTINUOUS UNIT SHALL HAVE ATTAINED A MINIMUM COMPRESSIVE STRENGTH OF 3,000 PSI BEFORE ADDITIONAL CONCRETE IS CAST IN THE UNIT.

CLASSIC CONCRETE BRIDGE RAIL, CONCRETE SIDEWALK AND CONCRETE MEDIAN IN A CONTINUOUS UNIT SHALL NOT BE CAST UNTIL ALL SLAB CONCRETE IN THE UNIT HAS BEEN CAST AND HAS REACHED A MINIMUM COMPRESSIVE STRENGTH OF 3,000 PSI.

SIDEWALK AND CLASSIC CONCRETE BRIDGE RAIL SHALL BE POURED IN STAGE II. SEE "SIDEWALK DETAILS" AND "CLASSIC CONCRETE BRIDGE RAIL" SHEETS.

FOR EXPANSION JOINT SEALS, SEE SPECIAL PROVISIONS.

ALL DIMENSIONS ARE HORIZONTAL OR VERTICAL UNLESS OTHERWISE NOTED.

* FOR INTERMEDIATE STEEL DIAPHRAGM DETAILS, SEE "INTERMEDIATE STEEL DIAPHRAGMS FOR 72" PRESTRESSED CONCRETE MODIFIED BULB TEE GIRDERS" SHEET.

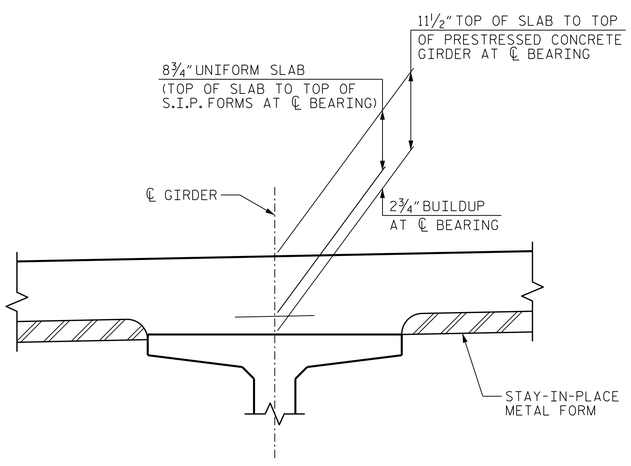

DETAIL "A"

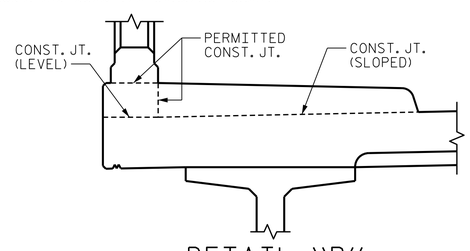

DETAIL "B"
LEFT SIDE SHOWN, RIGHT SIDE SIMILAR

PROJECT NO. B-4565
LENOIR COUNTY
STATION: 20+17.50 -L-

SHEET 1 OF 2

STATE OF NORTH CAROLINA
DEPARTMENT OF TRANSPORTATION
RALEIGH

SUPERSTRUCTURE
TYPICAL SECTION AND DETAILS

NORTH CAROLINA PROFESSIONAL SEAL 027799 ENGINEER ALLYSON K. ORR
11/13/2014

MI ENGINEERING
1011 SCHAUB DRIVE, SUITE 100
RALEIGH, NC 27606
(919) 851-6606
FIRM PE NUMBER : P-0671

REVISIONS								
NO.	BY:	DATE:	NO.	BY:	DATE:			
1			3					
2			4					

SHEET NO. S-7
TOTAL SHEETS 118

DRAWN BY :	B.E. LANNING	DATE :	08/14
CHECKED BY :	A.K. ORR	DATE :	08/14
DESIGN ENGINEER OF RECORD :	A.K. ORR	DATE :	10/14

11/13/2014
1:21:04 PM
User: blanning
Filename: P:\NC Bridges\MI4001.01 - B-4565 Lenoir\Site 1\Structures\401_035_S01_B4565_SMU_TS01.dgn