DocuSign Envelope ID: A67ABEF4-0DAE-48C7-97EB-263367BB90D4

BILL OF MATERIAL					
FOR CONCRETE MEDIAN ONLY					
BAR	NO.	SIZE	TYPE	LENGTH	WEIGHT
*A3	325	#4	STR	2'-8"	579
*B9	54	#4	STR	28'-9"	1037
EPOXY COATED REINFORCING STEEL					1616 LBS.
CLASS AA CONCRETE					27.6 C.Y.

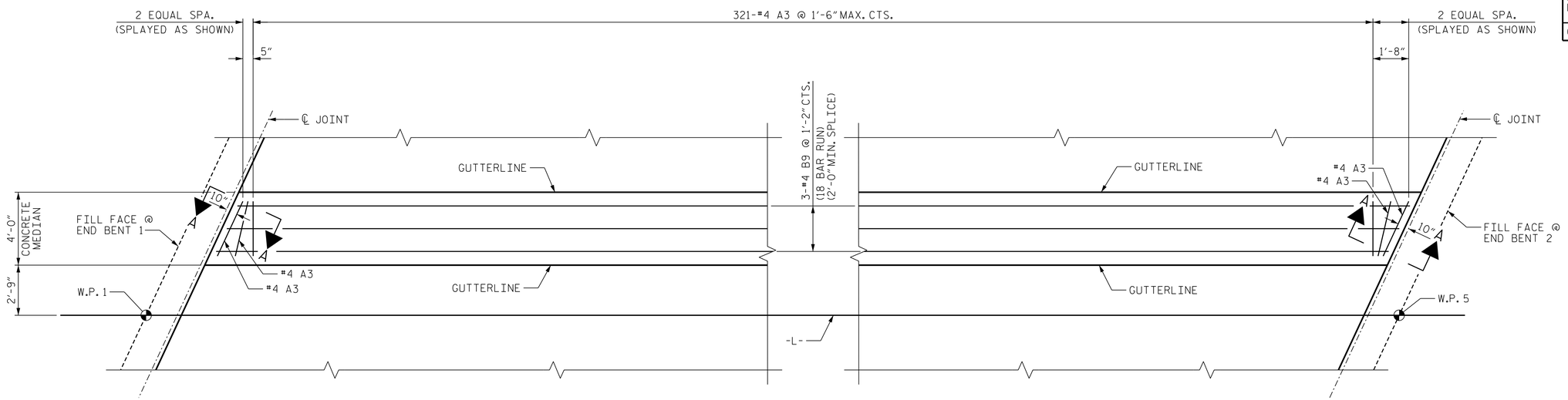

PLAN OF CONCRETE MEDIAN

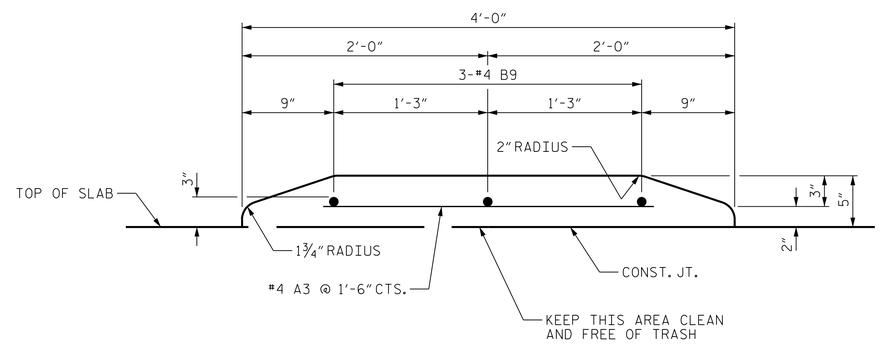

SECTION THRU CONCRETE MEDIAN

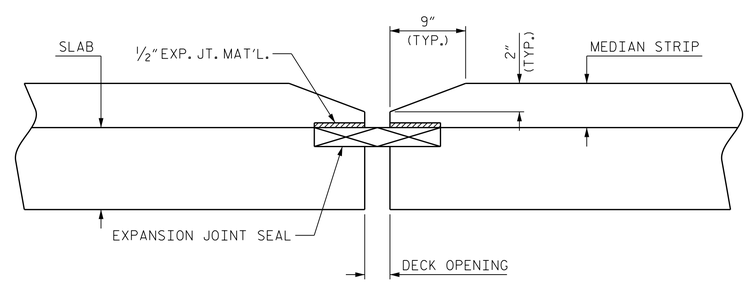

SECTION A-A

NOTES

GROOVED CONTRACTION JOINTS ½" IN DEPTH, SHALL BE TOOLED IN ALL EXPOSED FACES OF CONCRETE MEDIAN IN ACCORDANCE WITH ARTICLE 825-10(B) OF THE STANDARD SPECIFICATIONS. THE CONTRACTION JOINTS SHALL BE LOCATED AT A SPACING OF 8 FEET TO 10 FEET BETWEEN EXPANSION JOINTS. NO CONTRACTION JOINTS WILL BE REQUIRED FOR SEGMENTS LESS THAN 10 FEET IN LENGTH.

THE CONCRETE MEDIAN IN A CONTINUOUS UNIT SHALL NOT BE CAST UNTIL ALL SLAB CONCRETE IN THE UNIT HAS BEEN CAST AND HAS REACHED A MINIMUM COMPRESSIVE STRENGTH OF 3000 PSI.

NO SEPARATE MEASUREMENT OR PAYMENT WILL BE MADE FOR MATERIALS OR LABOR REQUIRED TO CONSTRUCT THE CONCRETE MEDIAN. THE ENTIRE COST OF THIS WORK SHALL BE INCLUDED IN THE UNIT BID PRICE BID FOR THE REINFORCED CONCRETE DECK SLAB.

ALL REINFORCING STEEL IN CONCRETE MEDIAN SHALL BE EPOXY COATED.

PROJECT NO. B-4565

LENOIR COUNTY

STATION: 20+17.50 -L-

NORTH CAROLINA PROFESSIONAL SEAL 027799 ENGINEER ALLYSON K. ORR
11/13/2014

STATE OF NORTH CAROLINA
DEPARTMENT OF TRANSPORTATION
RALEIGH

SUPERSTRUCTURE

CONCRETE MEDIAN DETAILS

MI ENGINEERING
1011 SCHAUB DRIVE, SUITE 100
RALEIGH, NC 27606
(919) 851-6606
FIRM PE NUMBER : P-0671

REVISIONS						SHEET NO.
NO.	BY:	DATE:	NO.	BY:	DATE:	S-15
1			3			TOTAL SHEETS
2			4			118

DRAWN BY :	B.E. LANNING	DATE :	08/14
CHECKED BY :	A.K. ORR	DATE :	08/14
DESIGN ENGINEER OF RECORD :	A.K. ORR	DATE :	10/14

11/13/2014
1:21:22 PM
User: blanning
Filename: P:\NC Bridges\MI4001.01 - B-4565 Lenoir\Site 1\Structures\401_075_S01_B4565_SMU_M001.dgn