DocuSign Envelope ID: A67ABEF4-0DAE-48C7-97EB-263367BB90D4

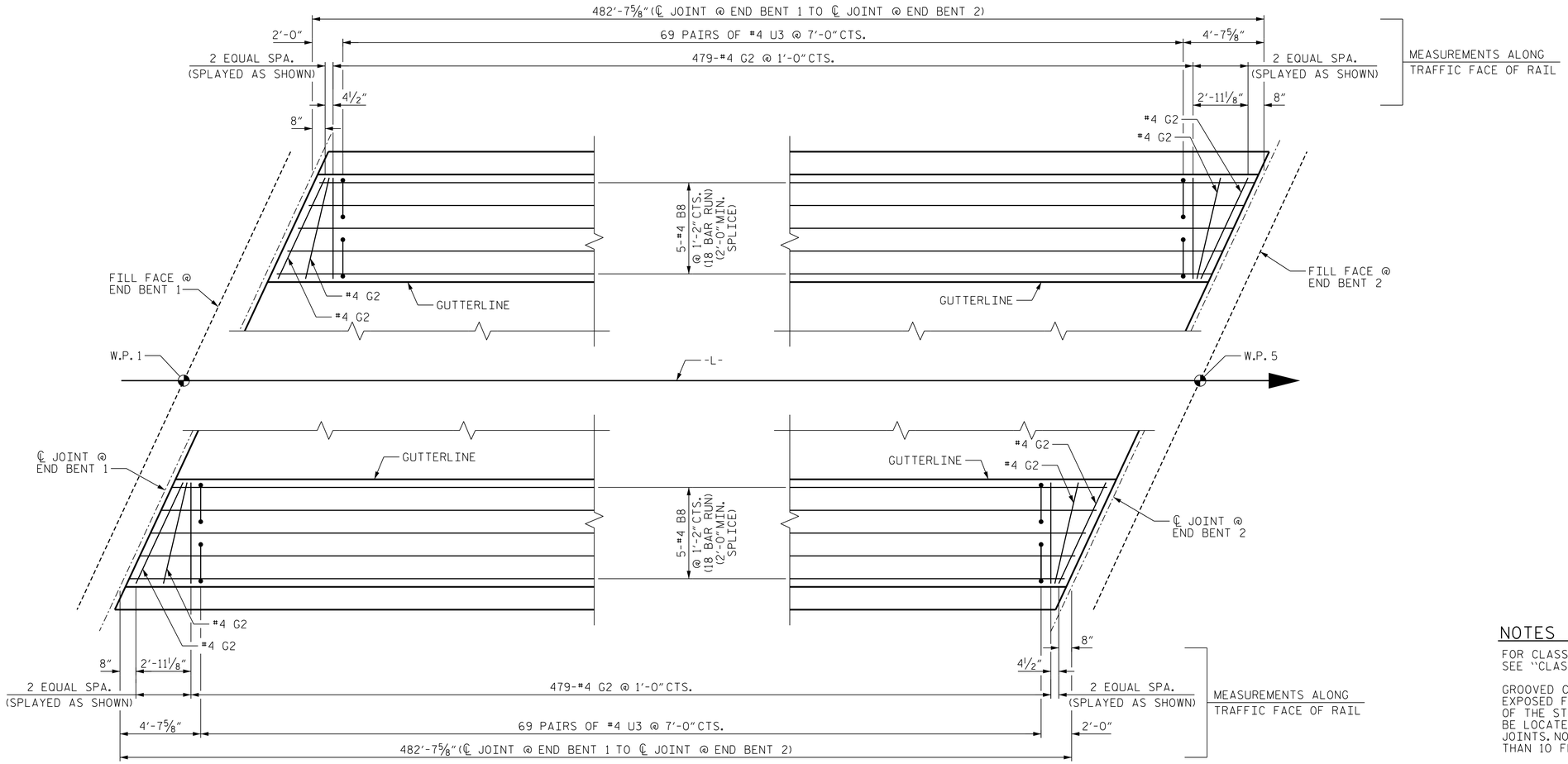

PLAN OF SIDEWALK

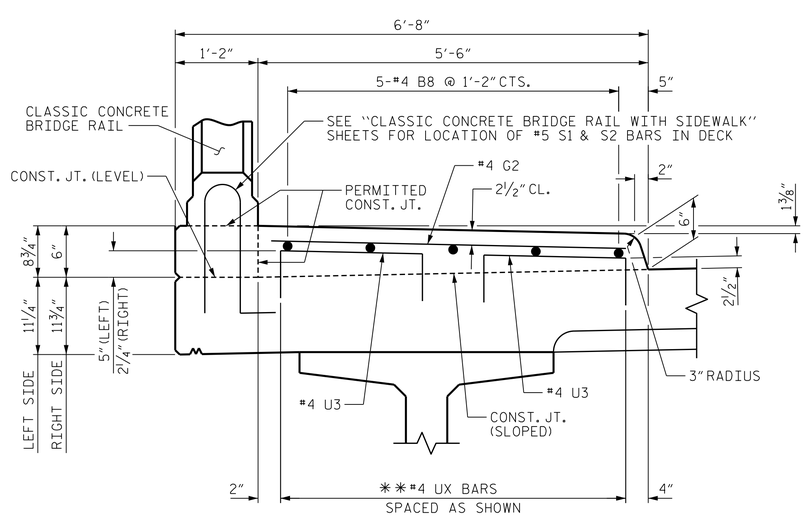

SECTION THRU SIDEWALK

**#4 U3 BARS MAY BE PUSHED INTO GREEN CONCRETE AFTER SPAN HAS BEEN SCREEDED OFF.

BILL OF MATERIAL
FOR SIDEWALK ONLY

STAGE I

BAR	NO.	SIZE	TYPE	LENGTH	WEIGHT
*U3	276	#4	1	3'-0"	553

*EPOXY COATED REINFORCING STEEL 553 LBS.

STAGE II

BAR	NO.	SIZE	TYPE	LENGTH	WEIGHT
*B8	180	#4	STR	28'-9"	3457
*G2	966	#4	STR	5'-0"	3226

*EPOXY COATED REINFORCING STEEL 6683 LBS.

TOTAL QUANTITIES

*EPOXY COATED REINFORCING STEEL 7236 LBS.

CLASS AA CONCRETE ** 135.2 C.Y.

BAR TYPES

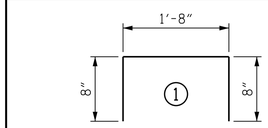

ALL BAR DIMENSIONS ARE OUT TO OUT.

** CONCRETE VOLUME ASSUMES THAT THE SIDEWALK IS POURED TO EDGE OF DECK RATHER THAN FACE OF CLASSIC CONCRETE RAIL.

NOTES

FOR CLASSIC CONCRETE BRIDGE RAIL REINFORCING STEEL AND DETAILS, SEE "CLASSIC CONCRETE BRIDGE RAIL WITH SIDEWALK" SHEETS.

GROOVED CONTRACTION JOINTS ½" IN DEPTH, SHALL BE TOOLED IN ALL EXPOSED FACES OF SIDEWALK IN ACCORDANCE WITH ARTICLE 825-10(B) OF THE STANDARD SPECIFICATIONS. THE CONTRACTION JOINTS SHALL BE LOCATED AT A SPACING OF 8 FEET TO 10 FEET BETWEEN EXPANSION JOINTS. NO CONTRACTION JOINTS WILL BE REQUIRED FOR SEGMENTS LESS THAN 10 FEET IN LENGTH.

THE SIDEWALK IN A CONTINUOUS UNIT SHALL NOT BE CAST UNTIL ALL SLAB CONCRETE IN THE UNIT HAS BEEN CAST AND HAS REACHED A MINIMUM COMPRESSIVE STRENGTH OF 3000 PSI.

SIDEWALK ON THE BRIDGE IS PAID FOR AS PART OF THE REINFORCED CONCRETE DECK SLAB PAY ITEM.

ALL REINFORCING STEEL IN SIDEWALK SHALL BE EPOXY COATED.

PROJECT NO. B-4565
LENOIR COUNTY
STATION: 20+17.50 -L-

STATE OF NORTH CAROLINA
DEPARTMENT OF TRANSPORTATION
RALEIGH

SUPERSTRUCTURE
SIDEWALK DETAILS

NORTH CAROLINA PROFESSIONAL SEAL 027799 ENGINEER ALLYSON K. ORR
11/13/2014

MI ENGINEERING
1011 SCHAUB DRIVE, SUITE 100
RALEIGH, NC 27606
(919) 851-6606
FIRM PE NUMBER : P-0671

REVISIONS						
NO.	BY:	DATE:	NO.	BY:	DATE:	
1			3			
2			4			

SHEET NO. S-14
TOTAL SHEETS 118

DRAWN BY :	B.E. LANNING	DATE :	08/14
CHECKED BY :	A.K. ORR	DATE :	08/14
DESIGN ENGINEER OF RECORD :	A.K. ORR	DATE :	10/14

11/13/2014
11:21:20 PM
User: blanning
Filename: P:\NC Bridges\MI4001.01 - B-4565 Lenoir\Site 1\Structures\401.070.S01.B4565_SMU_SW01.dgn