PROJECT REFERENCE NO.	SHEET NO.
B-4565	ECS_E-1

USE FOR ELECTRICAL CONDUIT SYSTEM ONLY

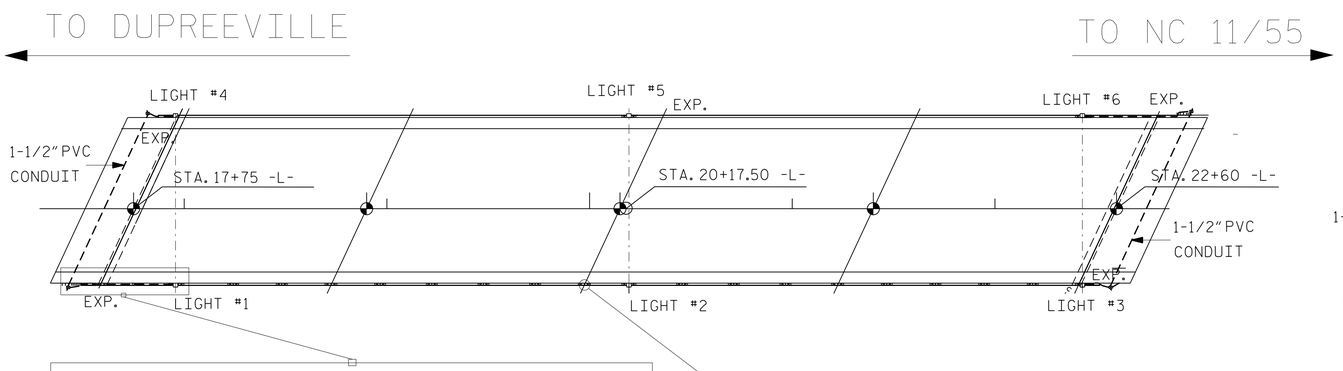

CONDUIT LAYOUT

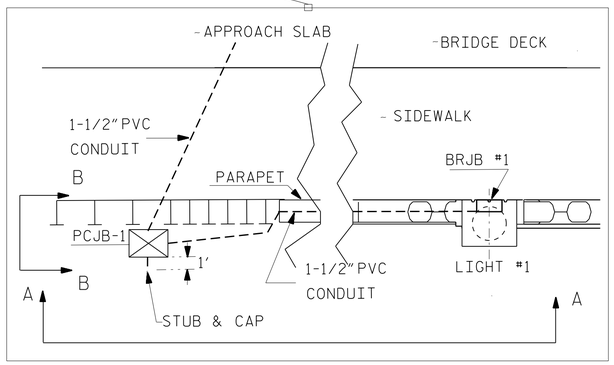

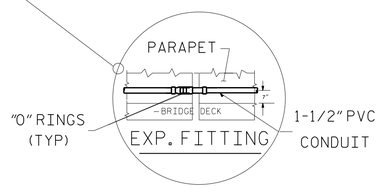

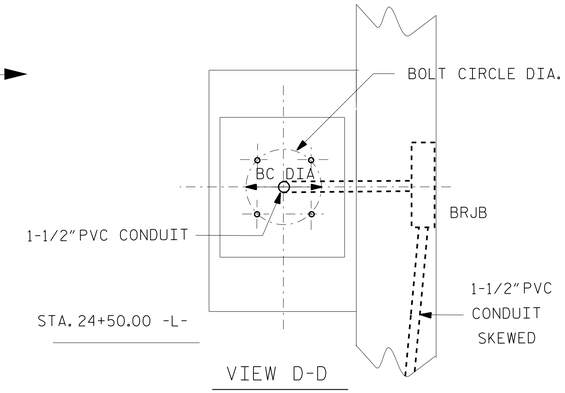

VIEW D-D

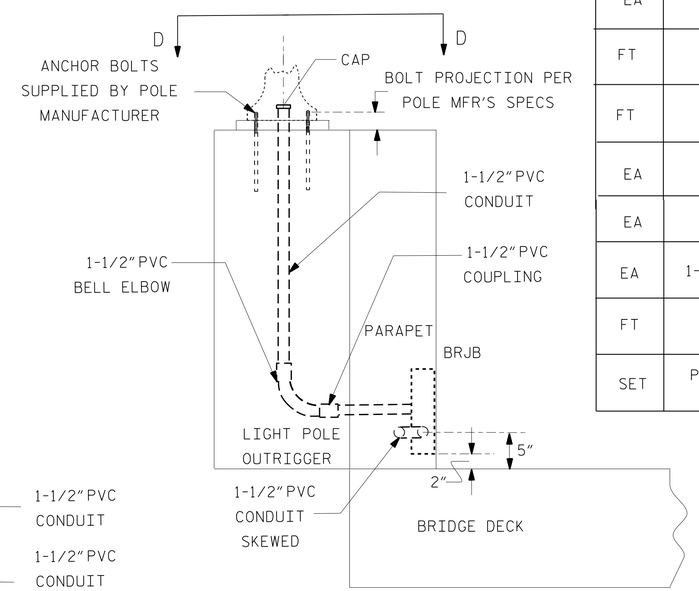

VIEW C-C

ESTIMATED BILL OF MATERIALS		
UNIT	ITEM	QNTY
EA	PCJB: 12"X11"X18" POLYMER CONCRETE JUNCTION BOX	4
EA	BRJB : 12"X12"X4" CAST IRON FLUSH MOUNT JUNCTION BOX	6
EA	PVC TO RGC CONDUIT 1.5" ADAPTER	4
EA	1-1/2" RGC CLOSE NIPPLE	4
EA	GALVANIZED IRON 1.5" LL CONDUIT BODY WITH COVER & GASKET	2
EA	GALVANIZED IRON 1.5" LR CONDUIT BODY WITH COVER & GASKET	2
EA	1-1/2" ERICKSON COUPLING	4
FT	1-1/2" RGC CONDUIT	20
FT	1-1/2" PVC CONDUIT	3370
EA	1-1/2" PVC 90° BELL ELBOW	18
EA	1-1/2" PVC COUPLING	18
EA	1-1/2" PVC EXPANSION FITTINGS	6
FT	PULL LINE	3500
SET	POLE MANUFACTURER'S ANCHOR BOLT SET WITH 2 WASHERS & 2 NUTS PER BOLT	6

△ NOTES

1. COORDINATE POWER SERVICE WITH THE CITY.
2. COORDINATE CONNECTION OF CONDUIT WITH OTHERS.
3. SEE STRUCTURE PLANS FOR LOCATION OF LIGHT PEDESTALS.
4. INSTALL ANCHOR BOLTS ACCORDING TO MANUFACTURER'S RECOMMENDATION.

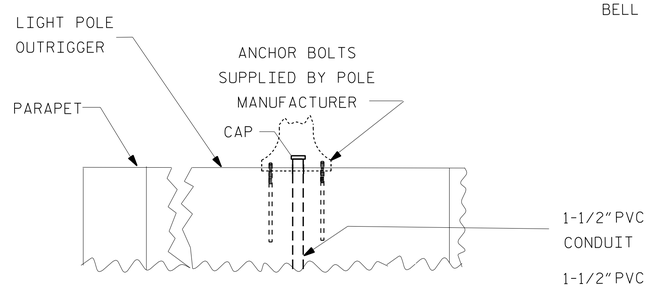

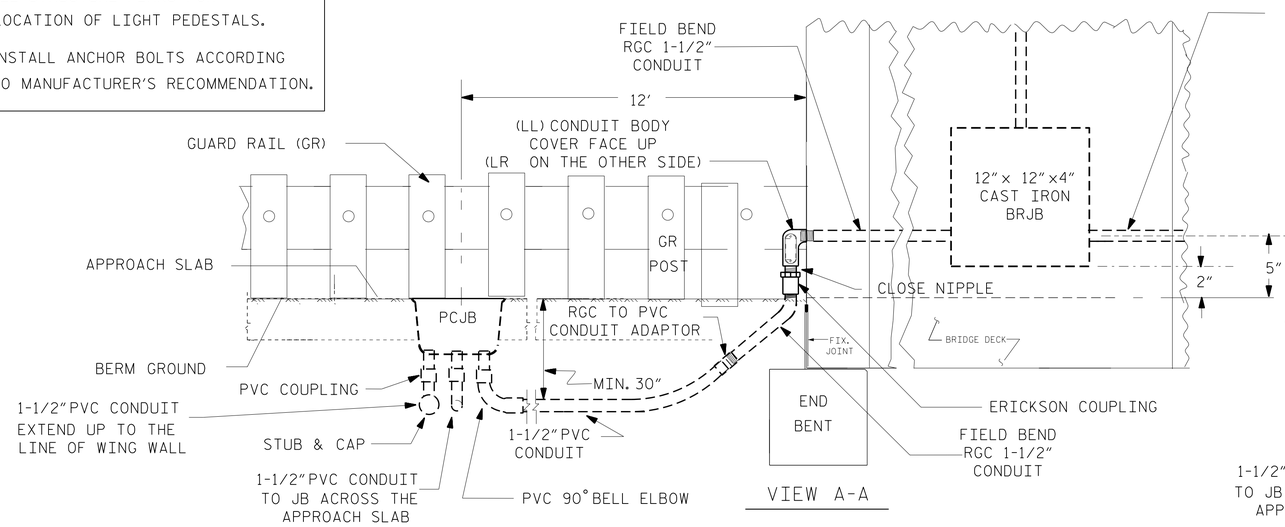

VIEW A-A

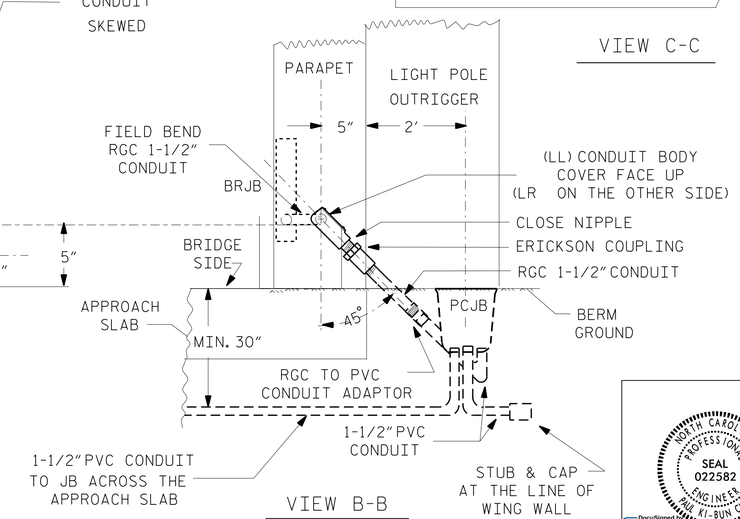

VIEW B-B

PROJECT NO. B-4565

LENOIR COUNTY

STATION: 20+17.50 -L-

SHEET 1 OF 1

STATE OF NORTH CAROLINA
DEPARTMENT OF TRANSPORTATION
RALEIGH

ELECTRICAL CONDUIT SYSTEM
BRIDGE ON US 70/250 BUS.
OVER NEUSE RIVER BETWEEN
US 70/250 BYP. AND NC 11/55

NORTH CAROLINA PROFESSIONAL SEAL 022582 ENGINEER PAUL KI-BUN CHAN

DocuSigned by: Paul Chan F83C4985EEEF4A2... 10/15/2014

REVISIONS						SHEET NO.
NO.	BY:	DATE:	NO.	BY:	DATE:	S-37
1	SKS		3			TOTAL SHEETS 118

DRAWN BY : SKS LIGHTING & ELECTRICAL DATE : 10/07/14
CHECKED BY : DATE :

15-OCT-2014 11:23
sksaha RD214523
R:\LightingElectrical\TIP\ECS\PlanShts\B-4565_ECS_E-1 of 2.dgn