DocuSign Envelope ID: A67ABEF4-0DAE-48C7-97EB-263367BB90D4

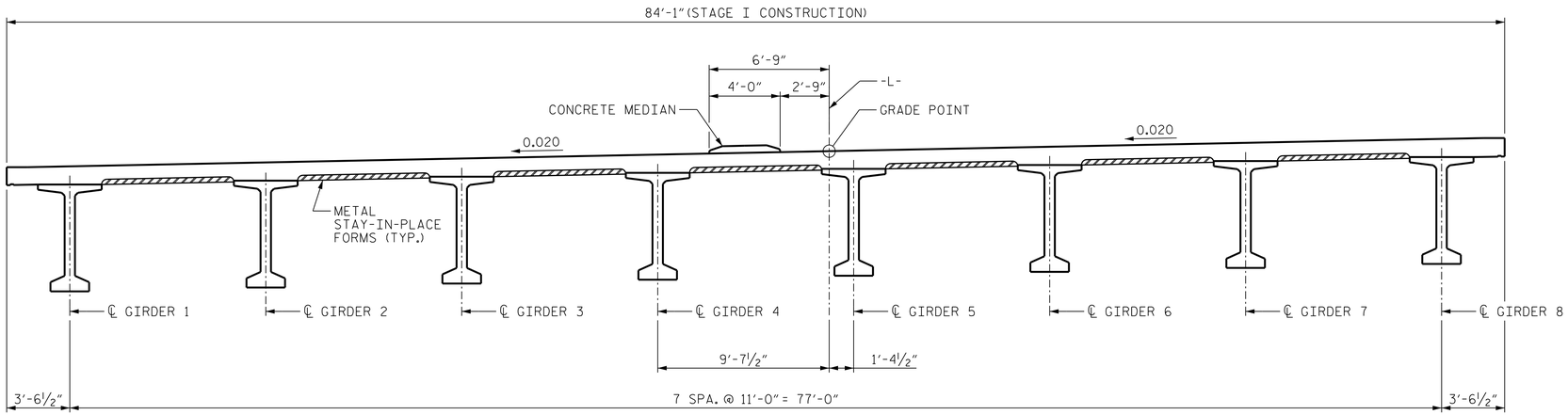

STAGE I CONSTRUCTION

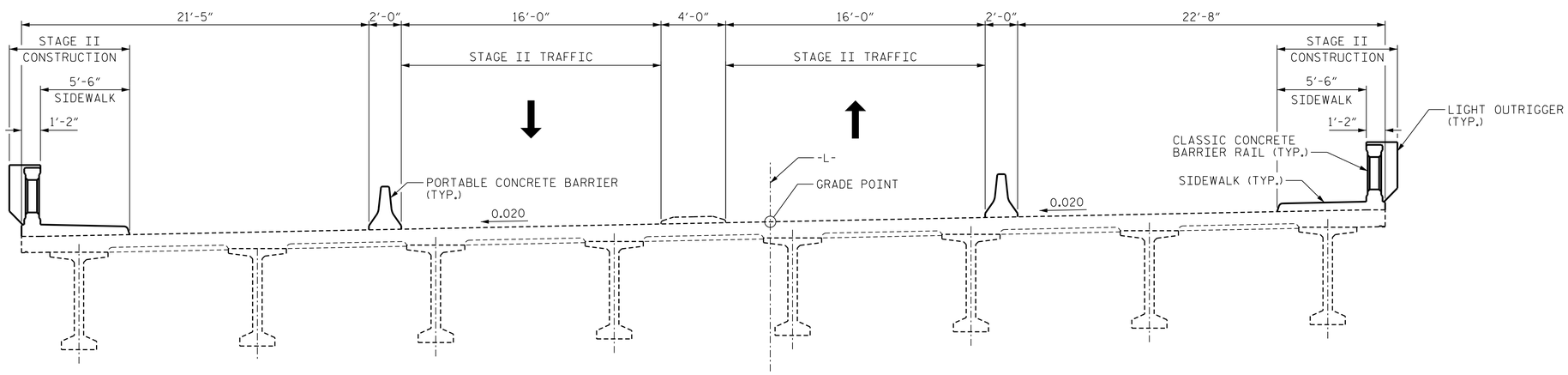

STAGE II CONSTRUCTION

CONSTRUCTION SEQUENCE

STAGE I CONSTRUCTION:

1. CONSTRUCT FULL WIDTH OF PROPOSED STRUCTURE AND APPROACH SLABS EXCEPT SIDEWALKS AND CLASSIC CONCRETE BRIDGE RAILS.

STAGE II CONSTRUCTION:

1. OPEN TRAFFIC TO STAGE II TRAFFIC IN AREA AS SHOWN.
2. CONSTRUCT BOTH SIDEWALKS, CLASSIC CONCRETE BARRIER RAILS AND LIGHT OUTRIGGERS.
3. REMOVE PORTABLE CONCRETE BARRIERS.

NOTES

FOR TRAFFIC PHASING, SEE TRAFFIC CONTROL PLANS.

THE PORTABLE CONCRETE BARRIER IS A TRAFFIC CONTROL PAY ITEM.

SEE TRAFFIC CONTROL PLANS FOR LOCATION AND PAY LIMITS OF PORTABLE CONCRETE BARRIER.

PROJECT NO. B-4565

LENOIR COUNTY

STATION: 20+17.50 -L-

STATE OF NORTH CAROLINA
DEPARTMENT OF TRANSPORTATION
RALEIGH

CONSTRUCTION
STAGING SEQUENCE

NORTH CAROLINA PROFESSIONAL SEAL 027799 ENGINEER ALLYSON K. ORR
11/13/2014

MI ENGINEERING
1011 SCHAUB DRIVE, SUITE 100
RALEIGH, NC 27606
(919) 851-6606
FIRM PE NUMBER : P-0671

REVISIONS						
NO.	BY:	DATE:	NO.	BY:	DATE:	
1			3			
2			4			

SHEET NO. S-6
TOTAL SHEETS 118

DRAWN BY :	G.R. COLS	DATE :	10/14
CHECKED BY :	A.K. ORR	DATE :	10/14
DESIGN ENGINEER OF RECORD :	A.K. ORR	DATE :	10/14

11/13/2014
1:21:02 PM
User: blanning
Filename: P:\NC Bridges\MI4001.01 - B-4565 Lenoir\Site 1\Structures\401_030_S01_B4565_SMU_PC01.dgn