DocuSign Envelope ID: A67ABEF4-0DAE-48C7-97EB-263367BB90D4

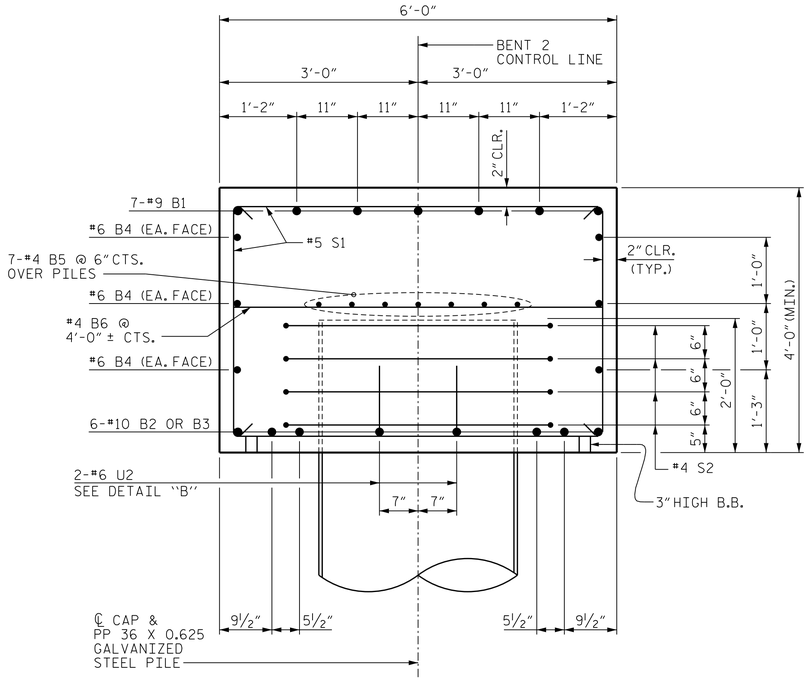

SECTION A-A

BAR TYPES

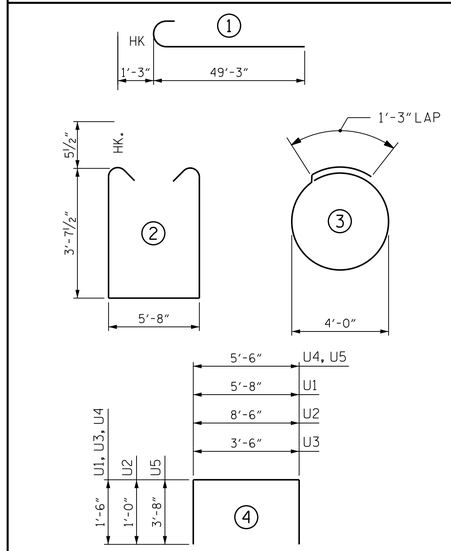

ALL BAR DIMENSIONS ARE OUT TO OUT.

BILL OF MATERIAL

BENT 2

BAR	NO.	SIZE	TYPE	LENGTH	WEIGHT
B1	14	#9	1	50'-6"	2404
B2	6	#10	STR	54'-10"	1416
B3	6	#10	STR	42'-10"	1106
B4	12	#6	STR	46'-9"	843
B5	28	#4	STR	24'-3"	454
B6	23	#4	STR	5'-8"	87
S1	75	#5	2	13'-10"	1082
S2	32	#4	3	13'-10"	296
U1	72	#4	4	8'-8"	417
U2	14	#6	4	10'-4"	217
U3	8	#4	4	6'-6"	35
U4	6	#4	4	8'-6"	34
U5	2	#9	4	12'-10"	87

REINFORCING STEEL	8478 LBS.
CLASS A CONCRETE	78.1 C.Y.
PP 36 X 0.625 GALVANIZED STEEL PILES	
NO. 8	760 LIN. FT.
PILE REDRIVES	4 EA.
PREDRILLING FOR PILES	320 LIN. FT.
STEEL PILE POINTS	8 EA.

THE CONCRETE DISPLACED BY THE FILLED GALVANIZED STEEL PIPE PILES HAS BEEN DEDUCTED FROM THE QUANTITY OF CLASS A CONCRETE FOR THE BENT CAP.

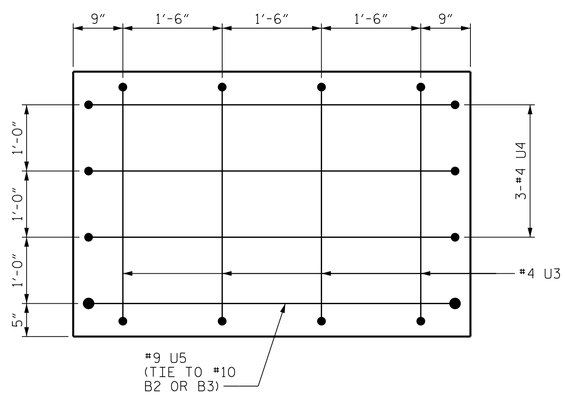

VIEW B-B

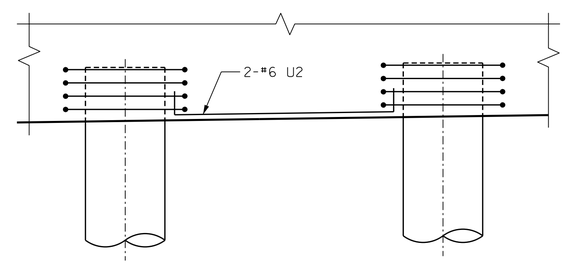

DETAIL "B"

NOTE: 2-#6 U2 TO BE USED IN EACH BAY.

PROJECT NO. B-4565

LENOIR COUNTY

STATION: 20+17.50 -L-

SHEET 2 OF 2

STATE OF NORTH CAROLINA
DEPARTMENT OF TRANSPORTATION
RALEIGH

SUBSTRUCTURE

BENT 2

NORTH CAROLINA PROFESSIONAL SEAL 027799 ENGINEER ALLYSON K. DIRR

11/13/2014

MI ENGINEERING
1011 SCHAUB DRIVE, SUITE 100
RALEIGH, NC 27606
(919) 851-6606
FIRM PE NUMBER : P-0671

REVISIONS						SHEET NO.
NO.	BY:	DATE:	NO.	BY:	DATE:	S-47
1			3			TOTAL SHEETS
2			4			118

DRAWN BY :	J.S. ISRAELNAIM	DATE :	09/14
CHECKED BY :	G.R. COLS	DATE :	09/14
DESIGN ENGINEER OF RECORD :	P.A. de PAOLI	DATE :	10/14

11/13/2014
1:22:29 PM
User: blanning
Filename: P:\NC Bridges\MI4001.01 - B-4565 Lenoir\Site 1\Structures\401_230_S01_B4565_SMU_BT202.dgn