PROJECT REFERENCE NO.	SHEET NO.
B-4565	2A-2

ROADWAY DESIGN ENGINEER

NORTH CAROLINA PROFESSIONAL SEAL 025873 ENGINEER Gary R. Lovering

DocuSigned by: Gary Lovering 11/10/2014

DFD76F34A6BD425...

PAVEMENT DESIGN ENGINEER

NORTH CAROLINA PROFESSIONAL SEAL 022896 ENGINEER CLARK S. MORRISON

DocuSigned by: Clark S. Morrison 11/7/2014

B0A110DD1E004C4...

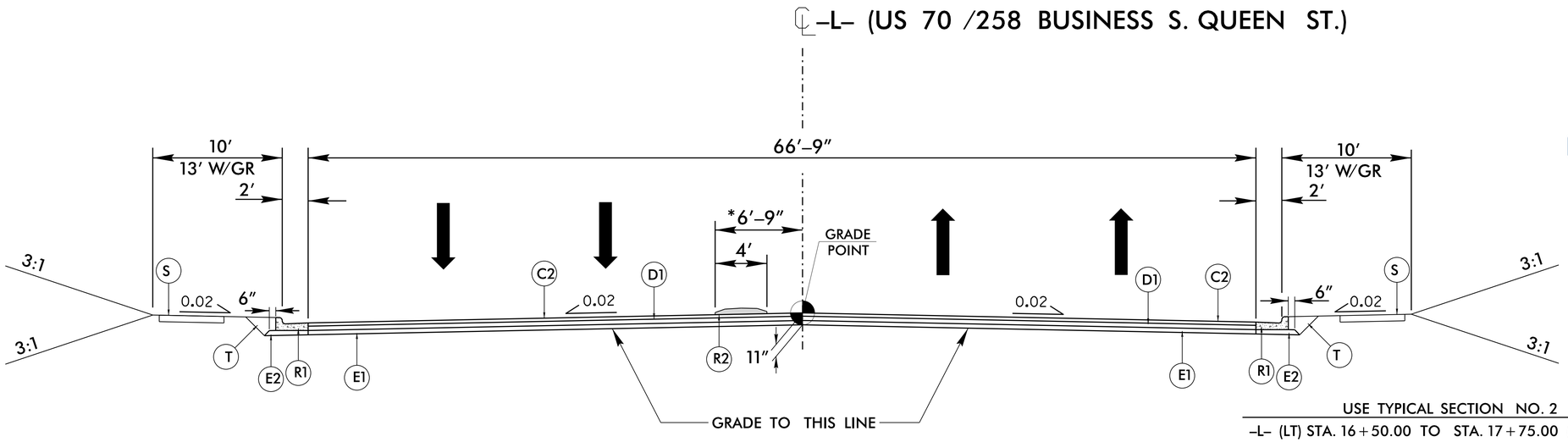

TYPICAL SECTION NO. 2

USE TYPICAL SECTION NO. 2

–L– (LT) STA. 16+50.00 TO STA. 17+75.00 (BEGIN BRIDGE)
–L– (LT) STA. 22+60.00 (END BRIDGE) TO STA. 24+50.00
–L– (LT) STA. 27+50.00 TO STA. 28+26.42 (BEGIN BRIDGE)
–L– (LT.) STA. 30+87.58 (END BRIDGE) TO STA. 32+00.00

–L– (RT.) STA. 15+00.00 TO STA. 17+75.00 (BEGIN BRIDGE)
–L– (RT.) STA. 22+60.00 (END BRIDGE) TO STA. 28+26.42 (BEGIN BRIDGE)
–L– (RT.) STA. 30+87.58 (END BRIDGE) TO STA. 32+00.00

* NOTE: SEE PLANS FOR LOCATION OF MONOLITHIC CONCRETE ISLAND

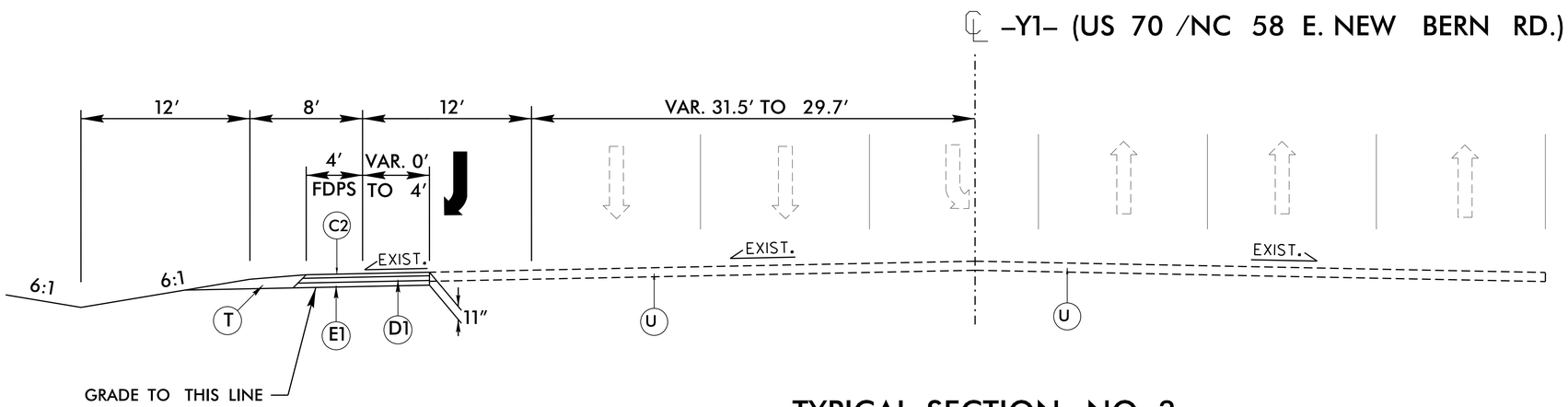

TYPICAL SECTION NO. 3

USE TYPICAL SECTION NO. 3

–Y1– (LT) STA. 10+45.18 TO STA. 15+00.00

PAVEMENT SCHEDULE	
C1	1½″ S9.5C
C2	3″ S9.5C
C3	VAR. S9.5C
D1	4″ I19.0C
D2	VAR. I19.0C
E1	4″ B25.0C
E2	VAR. B25.0C
J	6″ ABC
P	PRIME COAT
R1	2′-6″ C & G
R2	5″ MONOLITHIC CONCRETE ISLAND
S	4″ CONCRETE SIDEWALK
T	EARTH MATERIAL
U	EXIST. PAVEMENT
W	WEDGING

6/2/99

03-NOV-2014 ,t:55
R:\Roadway\Proj\b4565_rdy_typ.dgn
$$$$USERNAME$$$$