PROJECT REFERENCE NO.	SHEET NO.
B-4565	2A-3

ROADWAY DESIGN ENGINEER

NORTH CAROLINA PROFESSIONAL SEAL 025873 ENGINEER Gary R. Lovering

DocuSigned by: Gary Lovering 11/10/2014

DFD76F34A6BD425...

PAVEMENT DESIGN ENGINEER

NORTH CAROLINA PROFESSIONAL SEAL 022896 ENGINEER CLARK S. MORRISON

DocuSigned by: Clark S. Morrison 11/7/2014

B0A110DD1E0040C4...

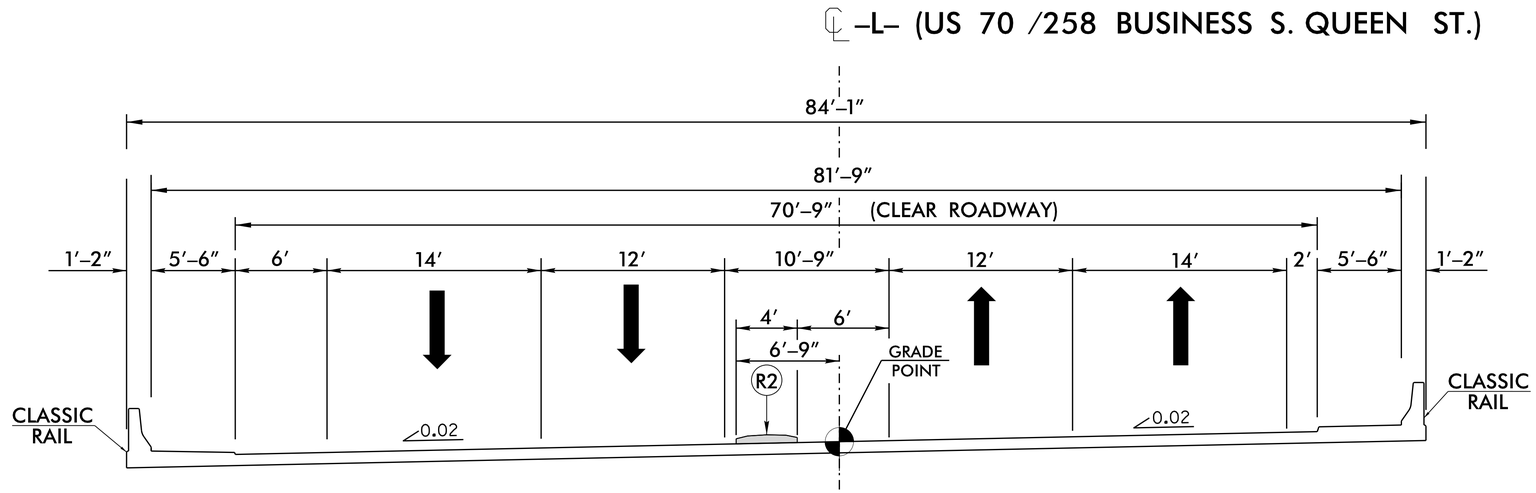

TYPICAL SECTION NO. 4

–L– STA. 17+75.00 (BEGIN BRIDGE) TO STA. 22+60.00 (END BRIDGE)
–L– STA. 28+26.42 (BEGIN BRIDGE) TO STA. 30+87.58 (END BRIDGE)

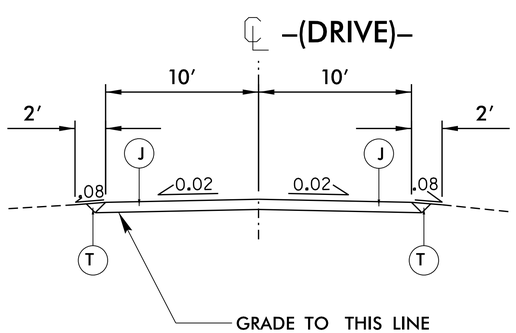

TYPICAL SECTION NO. 5

–DRIVE– STA. 10+64.55 TO STA. 16+93.99*

* –DRIVE– STA. 10+65+/– TO 12+85+/–
(OR AS DIRECTED BY THE ENGINEER)

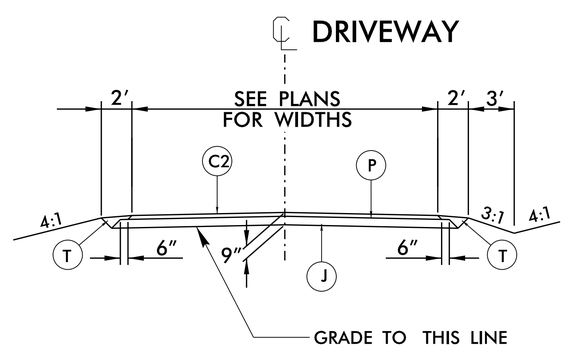

TYPICAL SECTION NO. 6

–Y1– STA. 14+41 LT.

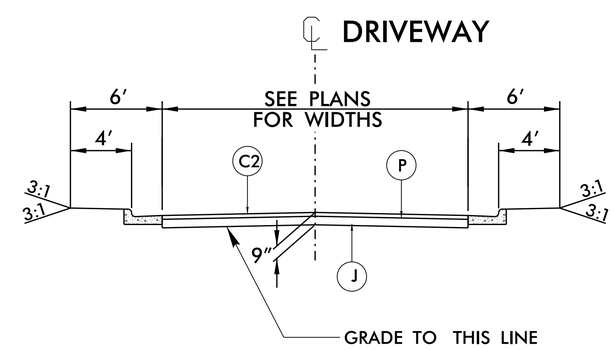

TYPICAL SECTION NO. 7

–L– STA. 16+29 RT.

PAVEMENT SCHEDULE	
C1	1½″ S9.5C
C2	3″ S9.5C
C3	VAR. S9.5C
D1	4″ I19.0C
D2	VAR. I19.0C
E1	4″ B25.0C
E2	VAR. B25.0C
J	6″ ABC
P	PRIME COAT
R1	2′-6″ C & G
R2	5″ MONOLITHIC CONCRETE ISLAND
S	4″ CONCRETE SIDEWALK
T	EARTH MATERIAL
U	EXIST. PAVEMENT
W	WEDGING

6/2/99

03-NOV-2014 11:55
R:\Roadway\Proj\b4565_rdy_typ.dgn
$$$$USERNAME$$$$