PROJECT REFERENCE NO.	SHEET NO.
I-5508	2C-2

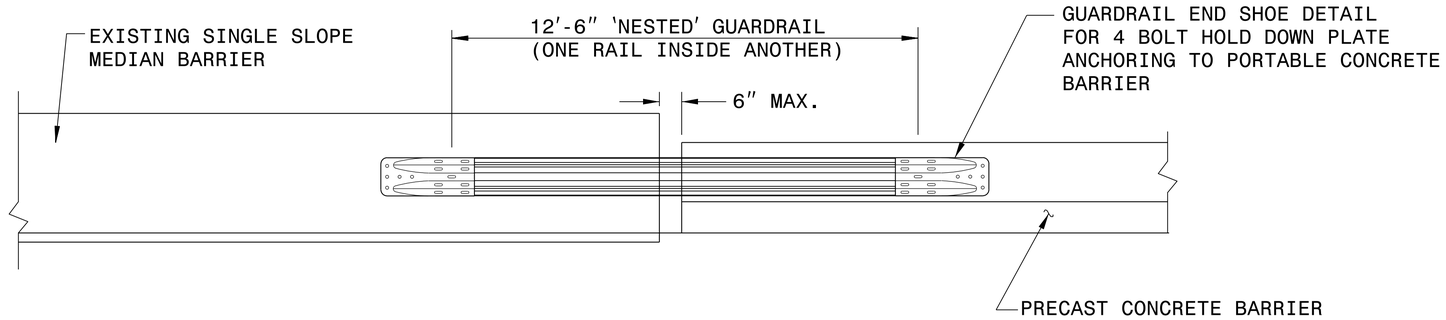

ELEVATION VIEW

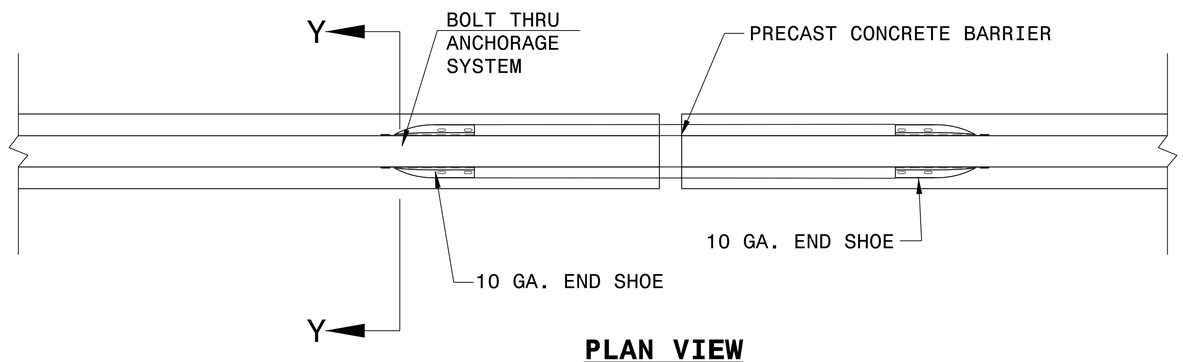

PLAN VIEW

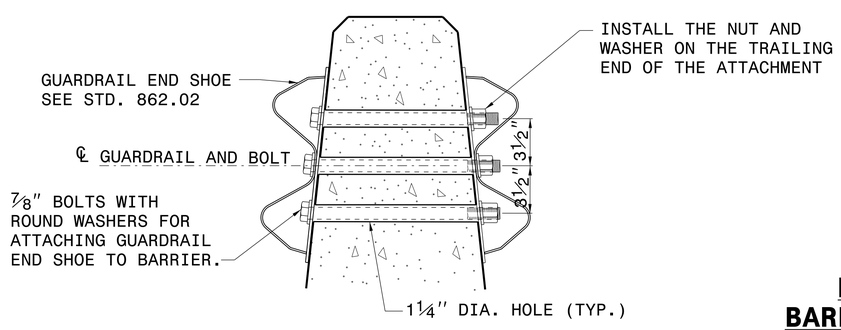

PART SECTION OF BARRIER OR RAIL

THRU END SHOE SECTION

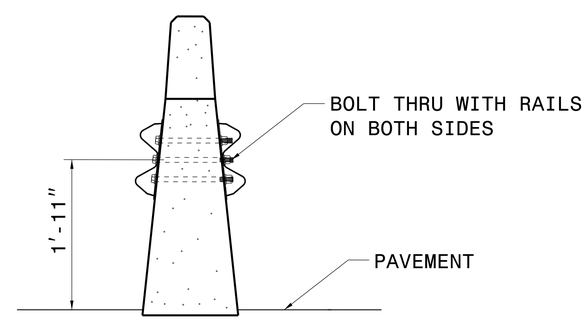

EXISTING SINGLE SLOPE MEDIAN BARRIER WITH CONCRETE GLARE SCREEN ON TOP

SECTION Y-Y

NORTH CAROLINA PROFESSIONAL SEAL 022966 ENGINEER Joel S. Howerton

DocuSigned by: Joel Howerton 873F3D17DCDC45F... 10/28/2014

CONTRACT STANDARDS
AND DEVELOPMENT UNIT
Office 919-707-6950 FAX 919-250-4119

TEMPORARY ANCHOR UNIT TYPE W-BEAM

ORIGINAL BY: C.O. CUEVAS DATE: 8-99
MODIFIED BY: rnbritt DATE: 10-07-2014
CHECKED BY: DATE:
FILE SPEC.: details/rnbritt/english/guardrail/temp anchor wbeam.dgn

$$$$SYTIME$$$$
$$$$USERNAME$$$$