PROJECT REFERENCE NO.	SHEET NO.
I-5508	2-A

ROADWAY DESIGN ENGINEER
NORTH CAROLINA PROFESSIONAL SEAL 024912 ENGINEER Kevin E. Moore
DocuSigned by: Kevin E. Moore 10/30/2014
7E0B1CF9C15A4A7...

PAVEMENT DESIGN ENGINEER
NORTH CAROLINA PROFESSIONAL SEAL 022896 ENGINEER CLARK S. MORRISON
DocuSigned by: Clark S Morrison 11/3/2014
0662380TBE4F400...

PAVEMENT SCHEDULE

FINAL PAVEMENT DESIGN

B	PROP. OPEN-GRADED ASPHALT FRICTION COURSE, TYPE FC 2 MODIFIED AT AN AVERAGE RATE OF 90 LBS. PER SQ. YD.
C	PROP. APPROX. 3" ASPHALT CONCRETE SURFACE COURSE, TYPE S9.5D, AT AN AVERAGE RATE OF 168 LBS. PER SQ. YD. IN EACH OF TWO LAYERS.
D	PROP. APPROX. 3" ASPHALT CONCRETE INTERMEDIATE COURSE, TYPE I19.0D, AT AN AVERAGE RATE OF 342 LBS. PER SQ. YD.
E	PROP. APPROX. 6½" ASPHALT CONCRETE BASE COURSE, TYPE B25.0C, AT AN AVERAGE RATE OF 370.5 LBS. PER SQ. YD. IN EACH OF TWO LAYERS.
R	MEDIAN BARRIER
R1	EXISTING MEDIAN BARRIER
R2	PROPOSED TEMPORARY MEDIAN BARRIER
T	EARTH MATERIAL.
V	MILLING BITUMINOUS PAVEMENT. 3" DEPTH.
V1	MILLING OPEN-GRADED ASPHALT FRICTION COURSE
U	EXISTING PAVEMENT.
Y	MILLED RUMBLE STRIPS. SEE STANDARD 665.01 AND PLANS FOR LOCATIONS.

NOTE: PAVEMENT EDGE SLOPES ARE 1:1 UNLESS SHOWN OTHERWISE.

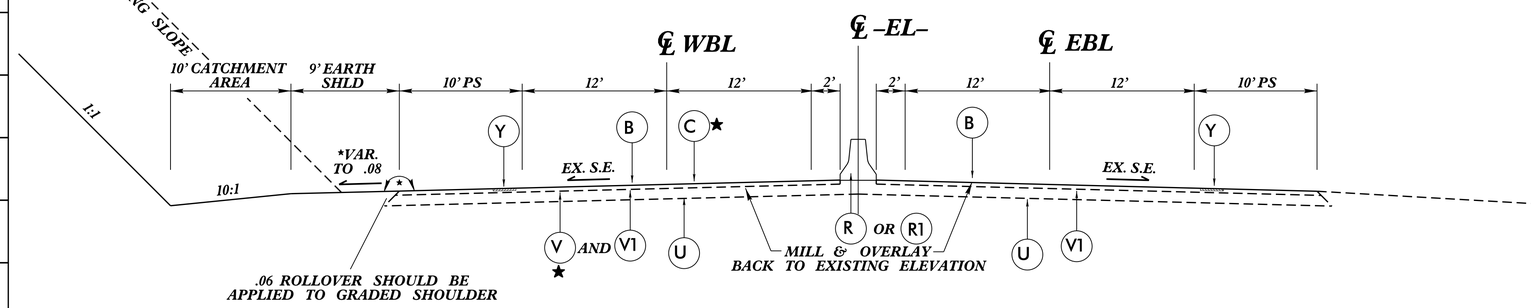

TYPICAL SECTION NO. 1

USE TYPICAL SECTION NO. 1 AT THE FOLLOWING LOCATION:

-EL- WBL STA. 323+67.59 TO 329+80.00
★ -EL- WBL STA. 329+80.00 TO 342+25.00
-EL- WBL STA. 342+25.00 TO 347+18.73
-EL- EBL STA. 323+67.59 TO 347+18.73

★ NOTE: LIMITS OF MILLING TO 3" DEPTH MAY BE ADJUSTED AT THE DISCRETION OF THE ENGINEER.

SEE PLAN SHEETS 4 AND 5 FOR LIMITS OF PROPOSED MEDIAN BARRIER (R1).

SEE TMP OR PLAN SHEETS 6 AND 7 PLANS FOR LIMITS OF TEMPORARY MEDIAN BARRIER. (R2)

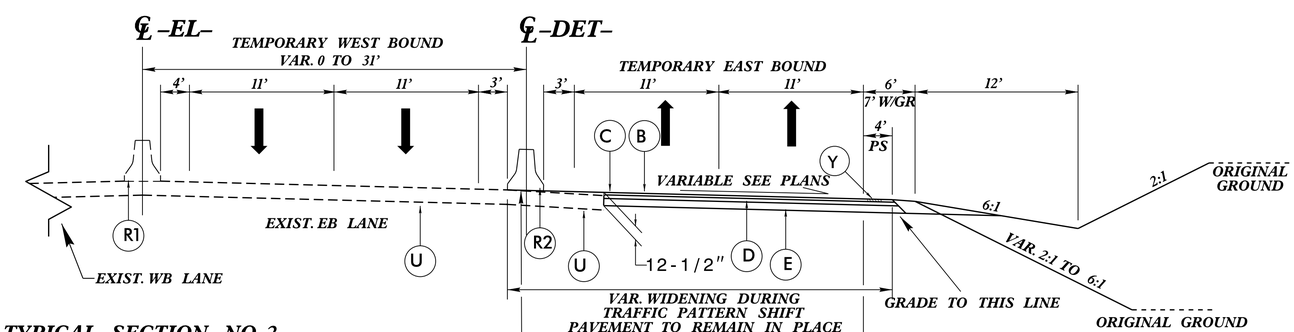

TYPICAL SECTION NO. 2

USE TYPICAL SECTION NO. 2 AT THE FOLLOWING LOCATION:

-EL- STA. 323+67.59 TO 347+18.73

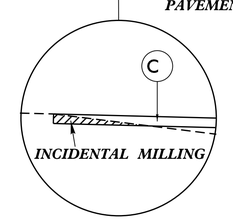

MILLING MAY BE NEEDED TO ACHIEVE SUITABLE PAVEMENT TIE

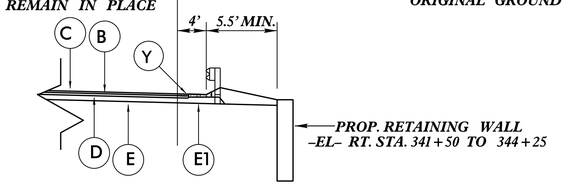

DETAIL OF WALL PLACEMENT BEHIND GUARDRAIL AND SHOULDER BERM GUTTER

6/2/99
30-OCT-2014 07:23
R:\Roadway\Proj\I5508_Rdy_typ.dgn