5/14/99

PROJECT REFERENCE NO.	SHEET NO.
I-5508	2C-1

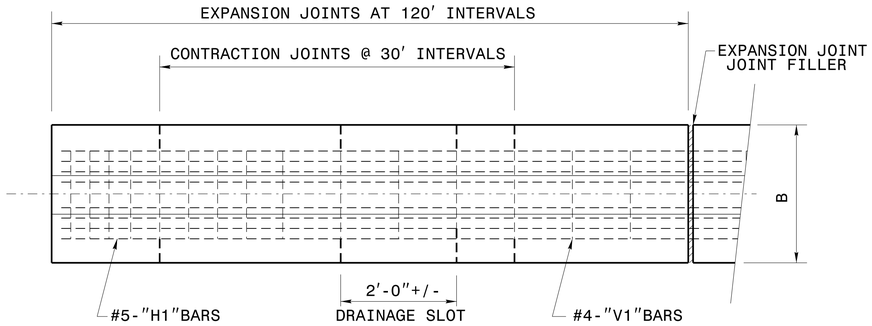

PLAN VIEW

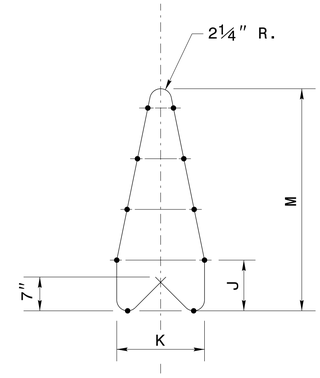

#4-″V1″ BAR
REINFORCING DETAIL

GENERAL NOTES:

1. USE CLASS ″AA″ CONCRETE.
2. MAINTAIN 2″ OF COVER OVER ALL REBAR. CHAMFER TOP AND ENDS OF BARRIER ½ INCH.
3. USE BAR SPLICE LENGTHS A MINIMUM OF 20 TIMES THE NORMAL DIAMETER OF THE BAR. ANY METHOD DEVISED BY THE CONTRACTOR AND APPROVED BY THE ENGINEER THAT WILL ASSURE THE LONGITUDINAL ROADWAY STEEL WILL BE POSITIONED +/-½INCH AS DIMENSIONED WILL BE SATISFACTORY.

   WELDED WIRE FABRIC MAY BE USED AS AN OPTION TO CONVENTIONAL REINFORCMENT FOR CAST-IN-PLACE BARRIER. WELDED WIRE FABRIC SHALL BE MADE IN ACCORDANCE WITH ASTM A497. CONDUIT TO BE PROVIDED ONLY WHEN CALLED FOR ELSEWHERE IN THE PLANS. POSITION OF THE CONDUITOR CONDUIT PASSAGEWAY MAY BE ADJUSTED TO FACILITATE CONSTRUCTION, SUBJECT TO APPROVAL BY THE ENGINEER.
4. A 36 INCH MINIMUM HEIGHT DIFFERENTIAL BETWEEN TOP OF BARRIER AND TOP OF PAVEMENT SHALL BE REQUIRED AT PLACEMENT IN ORDER TO ALLOW FOR UP TO 6 INCHS OF FUTURE OVERLAYS WHILE MAINTAINING A 30 INCH MINIMUM FUTURE EFFECTIVE HEIGHT OF BARRIER. TOTAL MINIMAL BARRIER HEIGHT FOR DESIGN IS THEREFORE DICTATED BY ALLOWANCE FOR FUTURE OVERLAYS PLUS EXISTING STAIRSTEP DIMENSION (VARIABLE). DIMENSIONS TYPICALLY ROUNDED TO 42 INCHES, 48 INCHES OR 54 INCHES TO FACILITATE PRECASTING.
5. REFER TO ROADWAY STANDARD DRAWING NO.854.01 FOR EXPANSION AND CONTRACTION JOINT, FILLER AND OTHER SPECIFICATIONS.

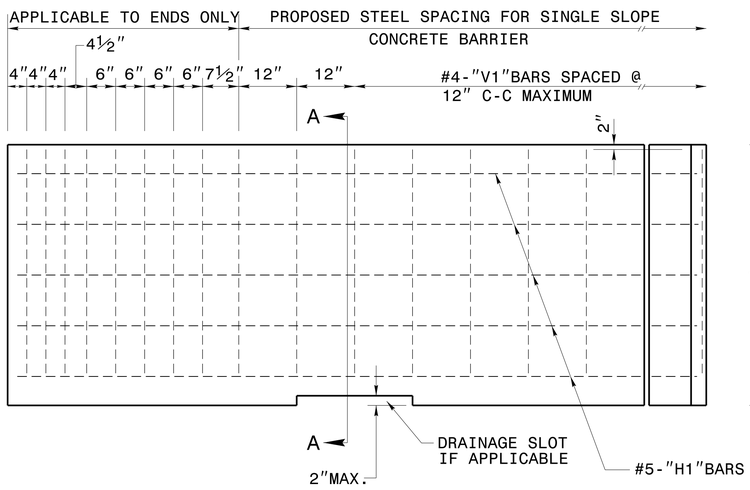

ELEVATION

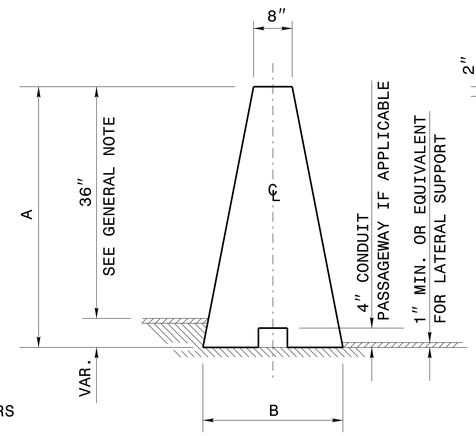

TYPICAL SECTION

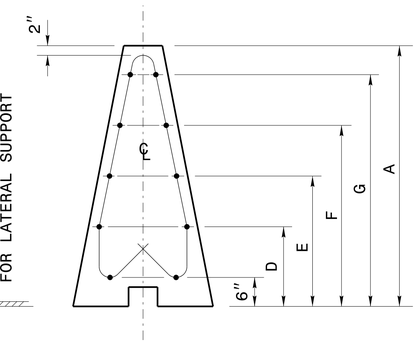

SECTION A-A

WHEN BARRIER IS TO BE USED WITH THE WELDED WIRE FABRIC, OPTION CONVENTIONAL BAR REINFORCMENT WILL BE REQUIRED WITHIN 2 FEET, PLUS A DEVELOPMENT LENGTH OF 18″ FROM THE ENDS OF EACH BARRIER SEGMENT.

WELDED WIRE FABRIC
4 X 12 - C20 % D14
60 X S1 MINIMUM YIELD STRENGTH

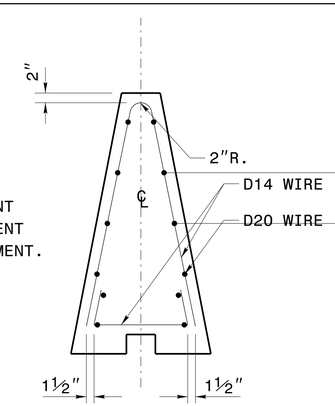

END VIEW

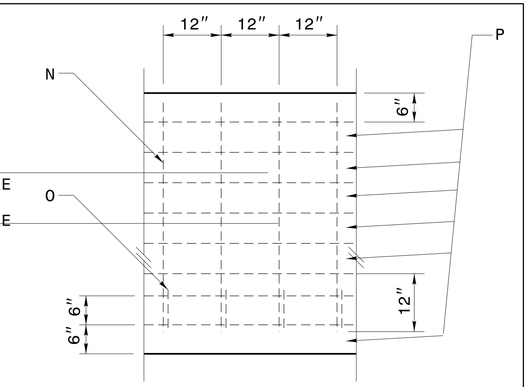

SIDE VIEW

WELDED WIRE FABRIC OPTIONAL REINFORCING

BARRIER HEIGHT (IN.)	DIMENSIONS											
	A	B	D	E	F	G	K	L	M	N	O	P
42″	42	24	13½	21	28½	36	15	9¼	36	72	28	4
48″	48	26 9/32	15	24	33	42	17½	10¾	42	84	31½	5
52″	54	28 9/16	16½	27	37½	48	19½	12¼	48	96	34¾	6

NORTH CAROLINA PROFESSIONAL SEAL 022966 ENGINEER Joel S. Howerton

DocuSigned by: Joel Howerton 10/28/2014
873F3D17DCDC45F...

CONTRACT SERVICES & DEVELOPMENT UNIT
STANDARDS AND SPECIAL DESIGN
Office 919-707-6950 FAX 919-250-4119

SINGLE SLOPE CONCRETE BARRIER

ORIGINAL BY: _____ DATE: _____
MODIFIED BY: rnbritt DATE: 08-18-06
CHECKED BY: _____ DATE: _____
FILE SPEC.: details/nbritt/english/gurardrail/singleslope.dgn