GEOTECHNICAL ENGINEER

NORTH CAROLINA PROFESSIONAL SEAL 30943 ENGINEER THEIN TUN ZAN

DocuSigned by: Thein Tun Zan 1/3/2014

387CD6165A0843... SIGNATURE DATE

ENGINEER

SIGNATURE DATE

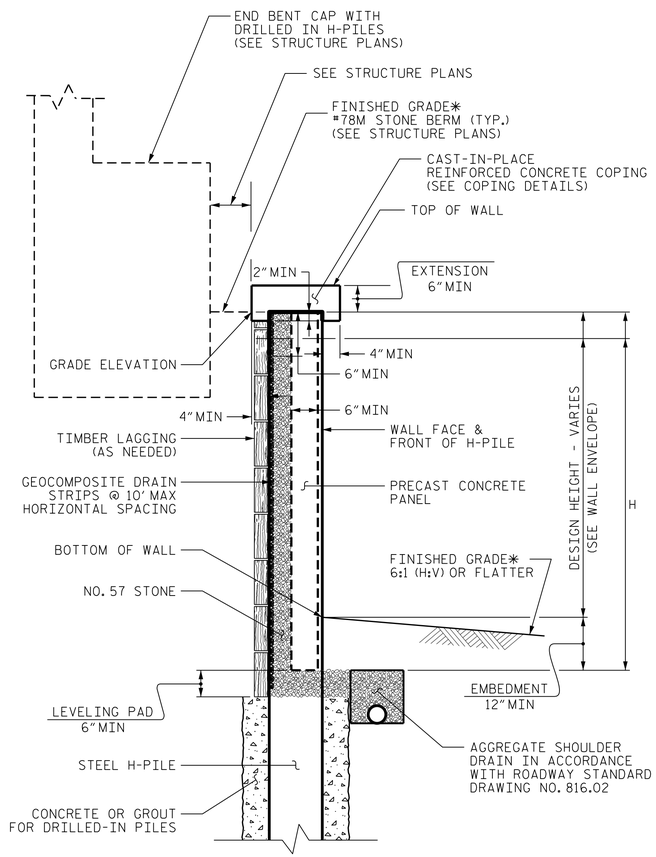

SOLDIER PILE WALL WITH PRECAST PANEL - TYPICAL SECTIONS

*SEE PLANS FOR FINISHED GRADE.

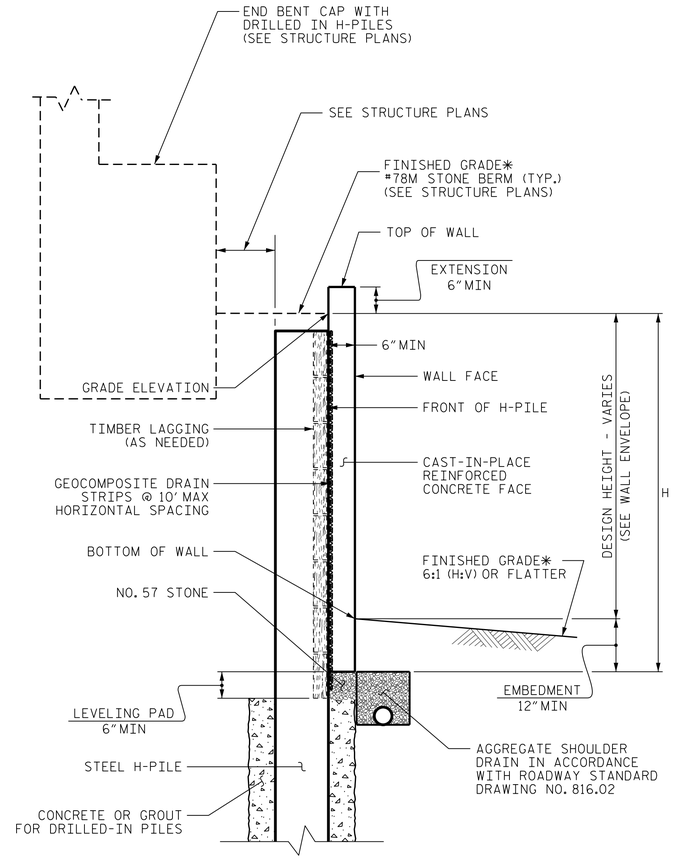

SOLDIER PILE WALL WITH CAST-IN-PLACE FACE - TYPICAL SECTION

*SEE PLANS FOR FINISHED GRADE.

NOTES:

FOR SOLDIER PILE RETAINING WALLS, SEE SOLDIER PILE RETAINING WALLS PROVISION.

DRILLED-IN H-PILES ARE REQUIRED FOR RETAINING WALL NO. 4 AND WALL NO. 5.

BEFORE BEGINNING SOLDIER PILE WALL DESIGN FOR RETAINING WALL NO. 4 AND WALL NO. 5, SURVEY WALL LOCATIONS AND SUBMIT REVISED WALL PROFILE VIEWS (WALL ENVELOPES) FOR REVIEW. DO NOT START WALL DESIGN OR CONSTRUCTION UNTIL THE REVISED WALL ENVELOPES ARE ACCEPTED.

DESIGN RETAINING WALL NO. 4 AND RETAINING WALL NO. 5 FOR THE FOLLOWING:
1) H = DESIGN HEIGHT + EMBEDMENT
2) DESIGN LIFE = 100 YEARS
3) IN-SITU ASSUMED MATERIAL PARAMETERS ABOVE ELEVATION 793 FT:
   UNIT WEIGHT, γ = 120 LB/CF
   FRICTION ANGLE, ϕ = 30 DEGREES
   COHESION, c = 0 LB/SF

DESIGN RETAINING WALL NO. 4 AND WALL NO. 5 FOR A LIVE LOAD (TRAFFIC) SURCHARGE.

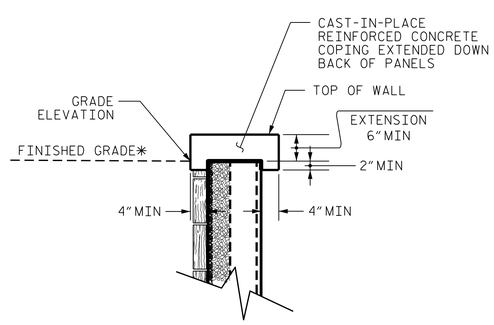

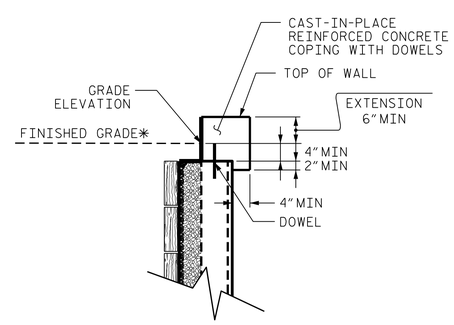

CAST-IN-PLACE REINFORCED CONCRETE COPING DETAILS

AT THE CONTRACTOR OPTION, CONNECT COPING TO PANELS WITH DOWELS OR EXTEND COPING DOWN BACK OF PANELS.
*SEE PLANS FOR FINISHED GRADE DETAILS.

PREPARED BY: T. T. ZAN	DATE: 12/2013
REVIEWED BY: J. BATTS	DATE: 12/2013

GEOTECHNICAL ENGINEERING UNIT

STATE OF NORTH CAROLINA DEPARTMENT OF TRANSPORTATION

- [X] EASTERN REGIONAL OFFICE
- [ ] WESTERN REGIONAL OFFICE
- [ ] CONTRACT OFFICE

STATE OF NORTH CAROLINA
DEPARTMENT OF TRANSPORTATION
RALEIGH

PROJECT NO.: U-3615B
GUILFORD COUNTY
STATION: -L- 233+40 & 234+00

SHEET 7 OF 7

RETAINING WALL NO. 4 & NO. 5 TYPICAL SECTIONS & DETAILS

REVISIONS						SHEET NO.
NO.	BY	DATE	NO.	BY	DATE	W7
1			3			TOTAL SHEETS
2			4			7