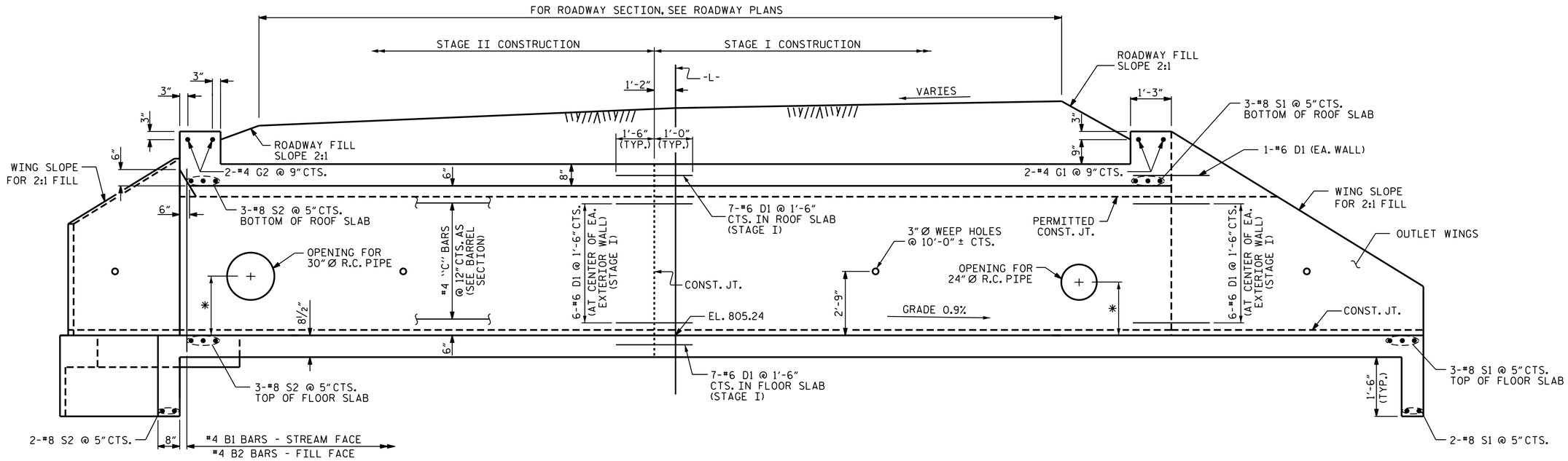

CULVERT SECTION NORMAL TO ROADWAY

* PIPE LOCATIONS TO BE DETERMINNED BY THE ENGINEER.

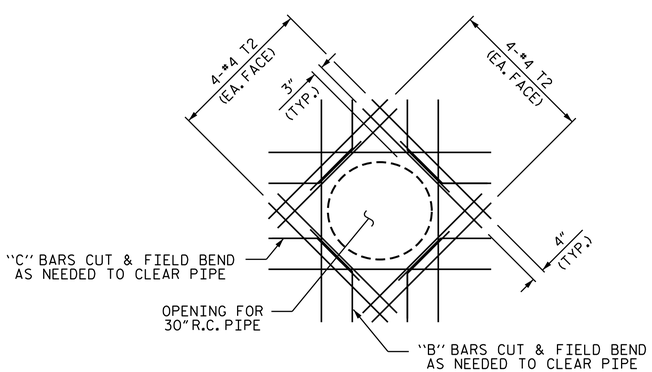

WALL OPENING DETAIL

(30" R.C. PIPE THRU EXTERIOR WALL)

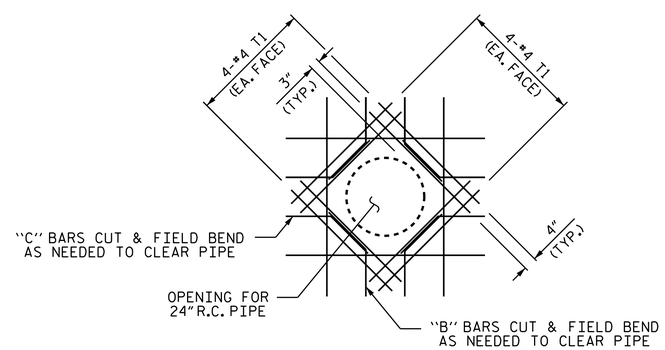

WALL OPENING DETAIL

(24" R.C. PIPE THRU EXTERIOR WALL)

FIELD BEND "B" & "C" BARS AS REQUIRED

THE R.C. PIPE THROUGH THE SIDEWALL OF THE CULVERT SHALL BE LOCATED BY THE ENGINEER. THE REINFORCING STEEL SHALL BE FIELD BENT AS NECESSARY TO CLEAR PIPES.

NORTH CAROLINA PROFESSIONAL SEAL 16301 ENGINEER TING HSIUNG FANG

DocuSigned by: Ting H. Fang
E72088400977435...
12/3/2014

PROJECT NO. U-3615B
GUILFORD COUNTY
STATION: 266+36.00 -L-

SHEET 2 OF 7

STATE OF NORTH CAROLINA
DEPARTMENT OF TRANSPORTATION
RALEIGH

SINGLE 8 FT. X 8 FT. CONCRETE BOX CULVERT

REVISIONS						SHEET NO.
NO.	BY:	DATE:	NO.	BY:	DATE:	C-2
1			3			TOTAL SHEETS
2			4			7

STD. NO. CB11

ASSEMBLED BY :	T. KIRSCHBAUM	DATE :	5/31/13
CHECKED BY :	T.H. FANG	DATE :	1/3/14
DESIGN ENGINEER OF RECORD :	P. K. NEWTON	DATE :	1/7/14
DRAWN BY :	R. WRIGHT	DATE :	AUG. 1989
CHECKED BY :	A.R. BISSETTE	DATE :	AUG. 1989

SPECIAL
STANDARD

REVISED 8-28-92 BY E.L.R. CHECKED BY C.R.P.
REVISED 8-22-89 BY A.R.B. CHECKED BY C.R.K.
REDRAWN 8-22-1989
REVISED 11-19-99 BY M.M. CHECKED BY R.W.W.