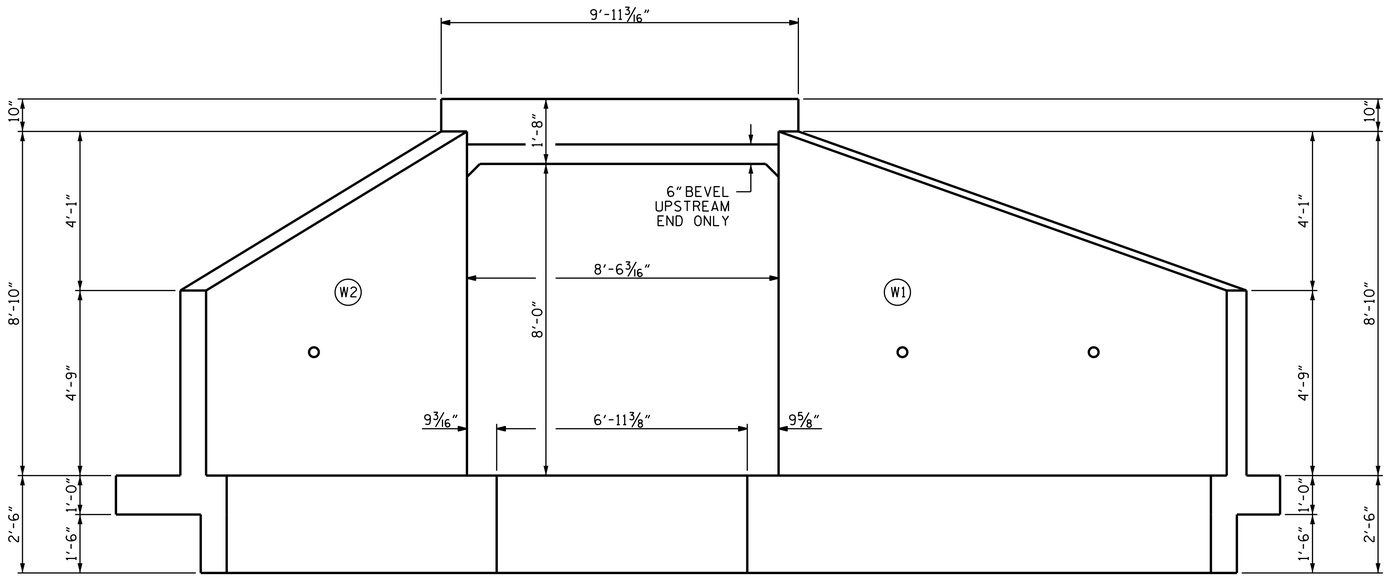

INLET END ELEVATION

STAGE II
(NORMAL TO SKEW)

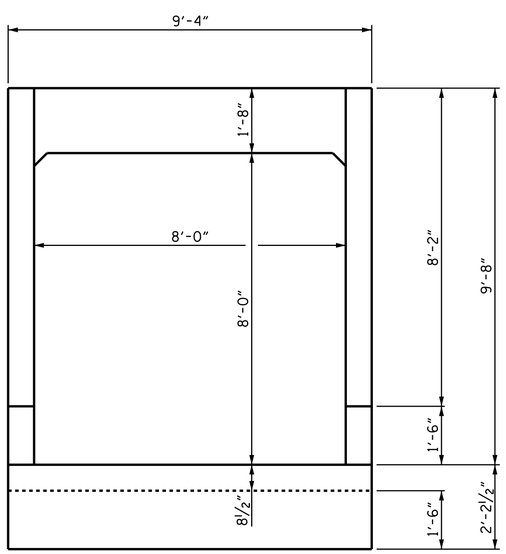

OUTLET END ELEVATION

STAGE I
(NORMAL TO SKEW)

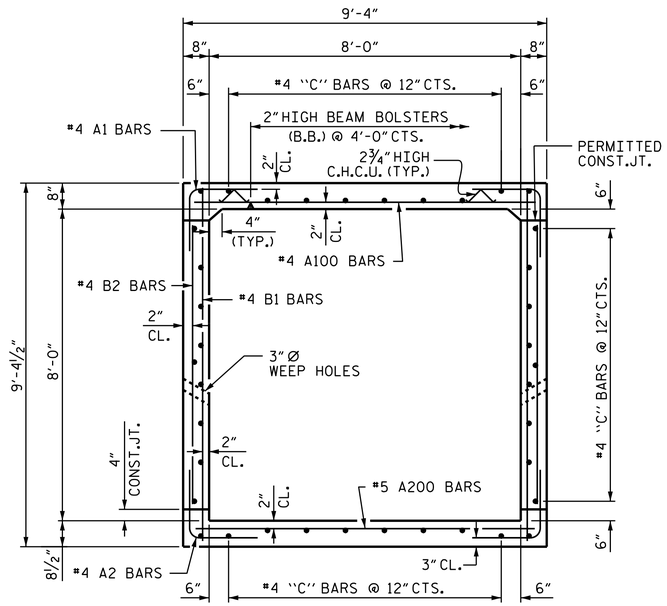

RIGHT ANGLE SECTION OF BARREL

THERE ARE 38 "C" BARS IN SECTION OF BARREL

BILL OF MATERIAL

STAGE I

BAR	NO.	SIZE	TYPE	LENGTH	WEIGHT
A1	362	#4	1	5'-6"	1328
A2	362	#4	1	5'-6"	1328
A100	181	#4	STR	8'-11"	1077
A200	181	#5	STR	8'-11"	1681
B1	182	#4	STR	8'-11"	1083
B2	182	#4	STR	7'-2"	870
C1	114	#4	STR	26'-6"	2018
D1	40	#6	STR	3'-0"	150
G1	2	#4	STR	9'-0"	12
S1	3	#8	STR	9'-0"	72
T1	8	#4	STR	4'-0"	21

REINFORCING STEEL = 9,640 LBS

STAGE II

BAR	NO.	SIZE	TYPE	LENGTH	WEIGHT
A1	320	#4	1	5'-6"	1176
A2	320	#4	1	5'-6"	1176
A100	162	#4	STR	8'-11"	965
A101	1	#4	STR	7'-8"	5
A102	1	#4	STR	6'-1"	4
A103	1	#4	STR	4'-6"	3
A104	1	#4	STR	3'-0"	2
A105	1	#4	STR	1'-5"	1
A200	162	#5	STR	8'-11"	1507
A201	1	#5	STR	7'-8"	8
A202	1	#5	STR	6'-1"	6
A203	1	#5	STR	4'-6"	5
A204	1	#5	STR	3'-0"	3
A205	1	#5	STR	1'-5"	1
B1	161	#4	STR	8'-11"	859
B2	161	#4	STR	7'-2"	771
C3	152	#4	STR	18'-6"	1878
G2	2	#4	STR	9'-5"	13
S2	8	#8	STR	9'-5"	201
T2	8	#4	STR	5'-0"	27

REINFORCING STEEL = 8,711 LBS

STRUCTURE QUANTITIES

STAGE I

CLASS A CONCRETE		
BARREL @ 0.879 CY/FT	66.3	CY
OUTLET WINGS ETC.	9.3	CY
TOTAL	75.6	CY
REINFORCING STEEL		
BARREL	9,640	LBS.
WINGS, ETC.	1,671	LBS.
TOTAL	11,311	LBS.

FOUNDATION COND. MAT'L ---------- 60.4 TONS

STAGE II

CLASS A CONCRETE		
BARREL @ 0.879 CY/FT	58.9	CY
WINGS, ETC.	12.2	CY
TOTAL	71.1	CY
REINFORCING STEEL		
BARREL	8,711	LBS.
WINGS, ETC.	774	LBS.
TOTAL	9,485	LBS.

FOUNDATION COND. MAT'L ---------- 44.1 TONS

CULVERT EXCAVATION ---------- LUMP SUM

BAR TYPE

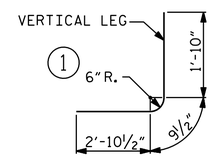

DIMENSIONS ARE OUT TO OUT

SPLICE LENGTH CHART

BAR	SIZE	SPLICE
C1	#4	1'-11"
C3	#4	1'-11"

PROJECT NO. U-3615B
GUILFORD COUNTY
STATION: 266+36.00 -L-

SHEET 4 OF 7

STATE OF NORTH CAROLINA
DEPARTMENT OF TRANSPORTATION
RALEIGH

SINGLE 8 FT. X 8 FT. CONCRETE BOX CULVERT

NORTH CAROLINA PROFESSIONAL SEAL 16301 ENGINEER TING HSIUNG FANG

DocuSigned by: Ting H. Fang
E72080A0977430...
12/3/2014

REVISIONS						SHEET NO.
NO.	BY:	DATE:	NO.	BY:	DATE:	C-4
1			3			TOTAL SHEETS
2			4			7

STD. NO. CB11

ASSEMBLED BY : T. KIRSCHBAUM	DATE : 5/31/13	SPECIAL	
CHECKED BY : T.H. FANG	DATE : 1/3/14		
DESIGN ENGINEER OF RECORD : P.K. NEWTON	DATE : 1/7/14		
DRAWN BY :	DATE : AUG. 1989	STANDARD	
CHECKED BY : A.R. BISSETTE	DATE : AUG. 1989		

REVISED 8-28-92 BY E.L.R. CHECKED BY G.R.P.