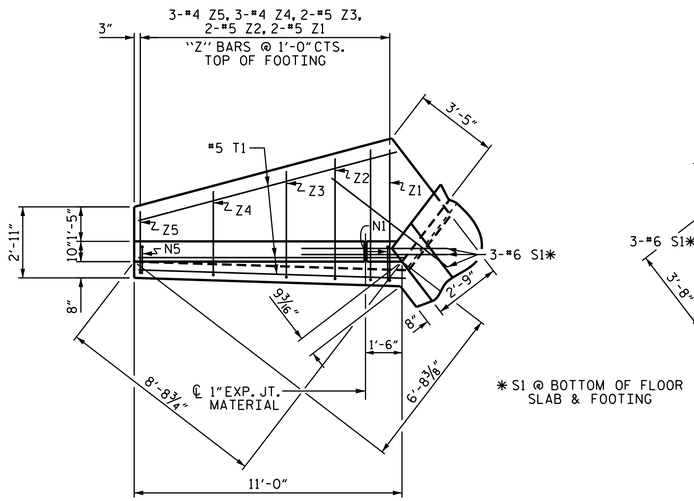

* S1 @ BOTTOM OF FLOOR SLAB & FOOTING

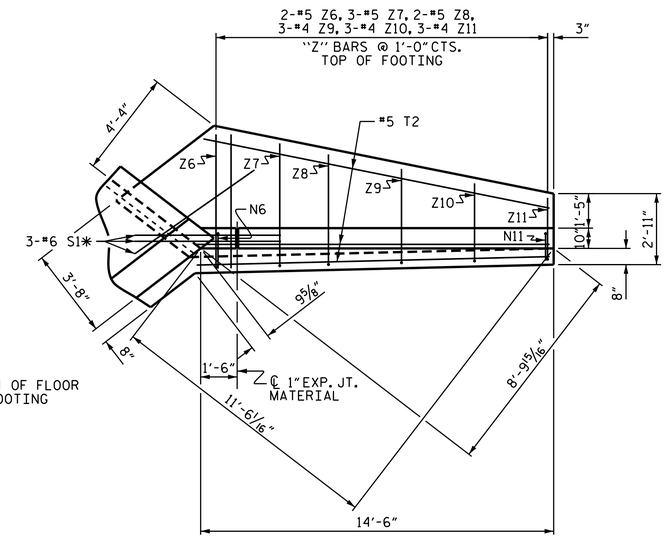

PLAN WING (W2)

PLAN WING (W1)

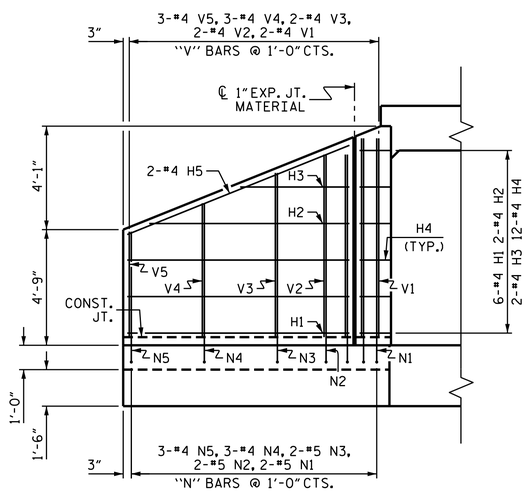

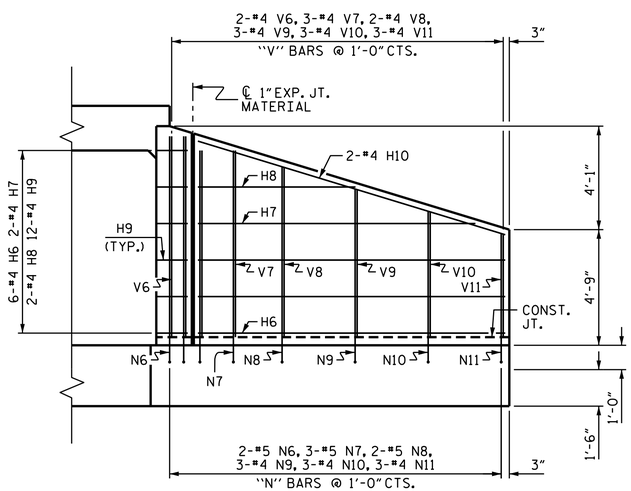

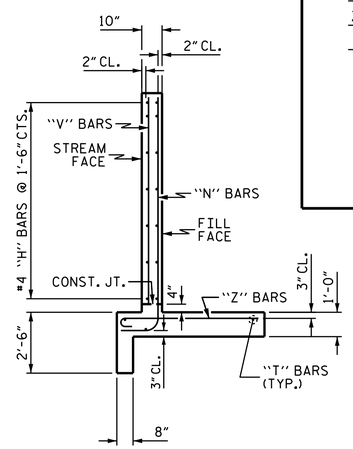

ELEVATION WING (W2)

ELEVATION WING (W1)

TYPICAL WING SECTION

BAR TYPES

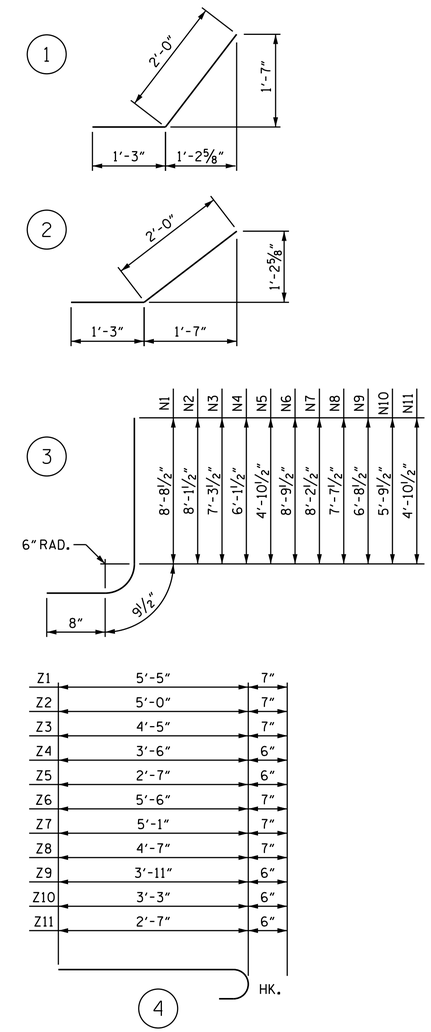

ALL BAR DIMENSIONS ARE OUT TO OUT.

BILL OF MATERIAL

BAR	NO.	SIZE	TYPE	LENGTH	WEIGHT
H1	6	#4	STR	9'-1"	36
H2	2	#4	STR	8'-2"	11
H3	2	#4	STR	4'-5"	6
H4	12	#4	1	3'-3"	26
H5	2	#4	STR	9'-10"	13
H6	6	#4	STR	12'-7"	50
H7	2	#4	STR	11'-4"	15
H8	2	#4	STR	6'-5"	9
H9	12	#4	2	3'-3"	26
H10	2	#4	STR	13'-2"	18
N1	2	#5	3	10'-2"	21
N2	2	#5	3	9'-7"	20
N3	2	#5	3	8'-9"	18
N4	3	#4	3	7'-7"	15
N5	3	#4	3	6'-4"	13
N6	2	#5	3	10'-3"	21
N7	3	#5	3	9'-8"	30
N8	2	#5	3	9'-1"	19
N9	3	#4	3	8'-2"	16
N10	3	#4	3	7'-3"	15
N11	3	#4	3	6'-4"	13
S1	6	#6	STR	6'-0"	54
T1	3	#5	STR	11'-0"	34
T2	3	#5	STR	14'-6"	45
V1	2	#4	STR	8'-2"	11
V2	2	#4	STR	7'-6"	10
V3	2	#4	STR	6'-9"	9
V4	3	#4	STR	5'-6"	11
V5	3	#4	STR	4'-4"	9
V6	2	#4	STR	8'-3"	11
V7	3	#4	STR	7'-8"	15
V8	2	#4	STR	7'-0"	9
V9	3	#4	STR	6'-1"	12
V10	3	#4	STR	5'-2"	10
V11	3	#4	STR	4'-3"	9
Z1	2	#5	4	6'-0"	13
Z2	2	#5	4	5'-7"	12
Z3	2	#5	4	5'-0"	10
Z4	3	#4	4	4'-0"	8
Z5	3	#4	4	3'-1"	6
Z6	2	#5	4	6'-1"	13
Z7	3	#5	4	5'-8"	18
Z8	2	#5	4	5'-2"	11
Z9	3	#4	4	4'-5"	9
Z10	3	#4	4	3'-9"	8
Z11	3	#4	4	3'-1"	6

REINFORCING STEEL FOR 2 WINGS 774 LBS

CLASS A CONCRETE
2 WINGS 11.3 CY
1 HEADWALL 0.5 CY
1 END CURTAIN WALL 0.4 CY
TOTAL 12.2 CY

PROJECT NO. U-3615B
GUILFORD COUNTY
STATION: 266+36.00 -L-

SHEET 6 OF 7

STATE OF NORTH CAROLINA
DEPARTMENT OF TRANSPORTATION
RALEIGH

STANDARD WINGS FOR CONCRETE BOX CULVERT

H = 8'-0" SLOPE = 2:1
75° SKEW

STAGE II

NORTH CAROLINA PROFESSIONAL SEAL 16301 ENGINEER TING HSIUNG FANG

DocuSigned by: Tay H. Fang E72088A0097435...
12/3/2014

REVISIONS						SHEET NO.
NO.	BY:	DATE:	NO.	BY:	DATE:	C-6
1			3			TOTAL SHEETS
2			4			7

ASSEMBLED BY : T. KIRSCHBAUM DATE : 5/31/13
CHECKED BY : T. H. FANG DATE : 12/16/13

DRAWN BY : CCJ 01/00
CHECKED BY : RWW 03/00

STD. NO. CW7508