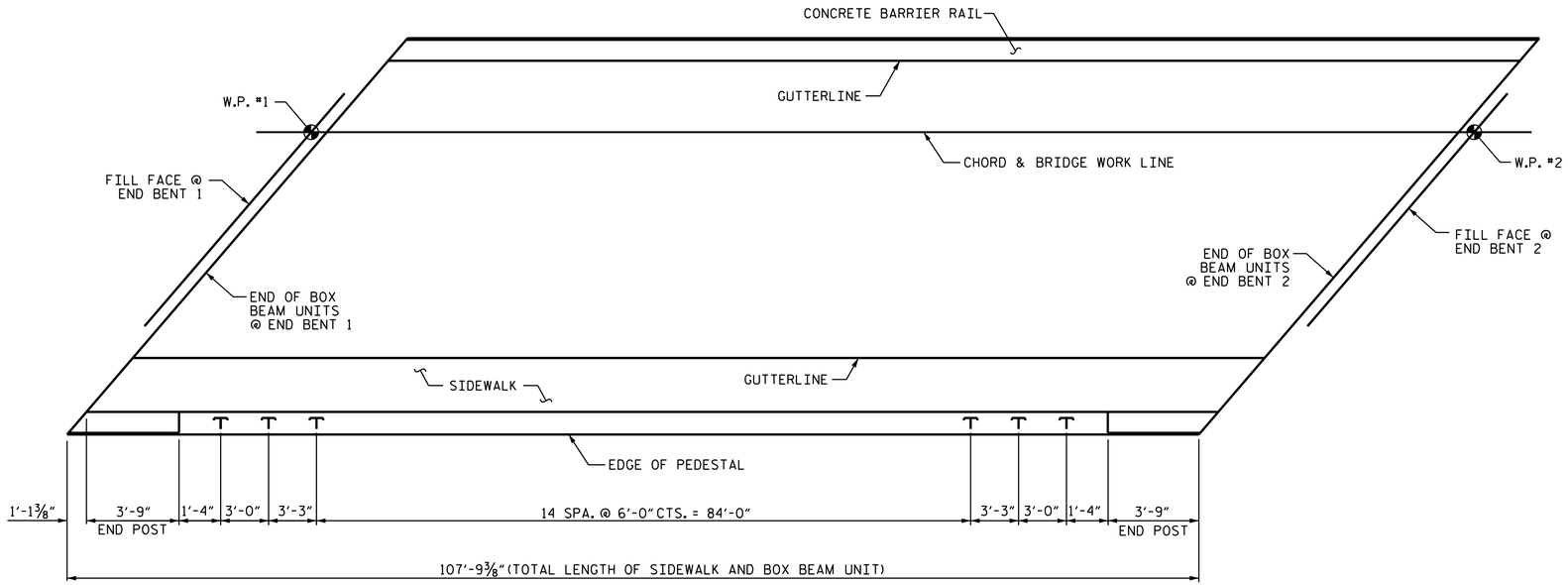

PLAN OF RAIL POST SPACING

BILL OF MATERIAL

ONE END POST (2 REQ'D)

BAR	NO.	SIZE	TYPE	LENGTH	WEIGHT
✱ E1	2	#7	1	3'-10"	16
✱ E2	2	#7	1	4'-3"	17
✱ E3	2	#7	1	4'-9"	19
✱ E4	2	#7	1	5'-2"	21
✱ E5	1	#7	1	3'-6"	7
✱ F1	2	#6	STR	2'-10"	9
✱ F2	2	#6	STR	3'-6"	11
✱ F3	1	#6	STR	3'-10"	6
✱ F4	2	#6	STR	4'-2"	13
✱ F5	1	#6	STR	4'-7"	7

✱ EPOXY COATED REINFORCING STEEL = 126 LBS.

CLASS AA CONCRETE = 0.5 C.Y.

BAR TYPES

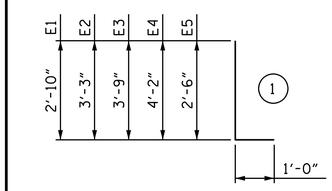

ALL BAR DIMENSIONS ARE OUT TO OUT

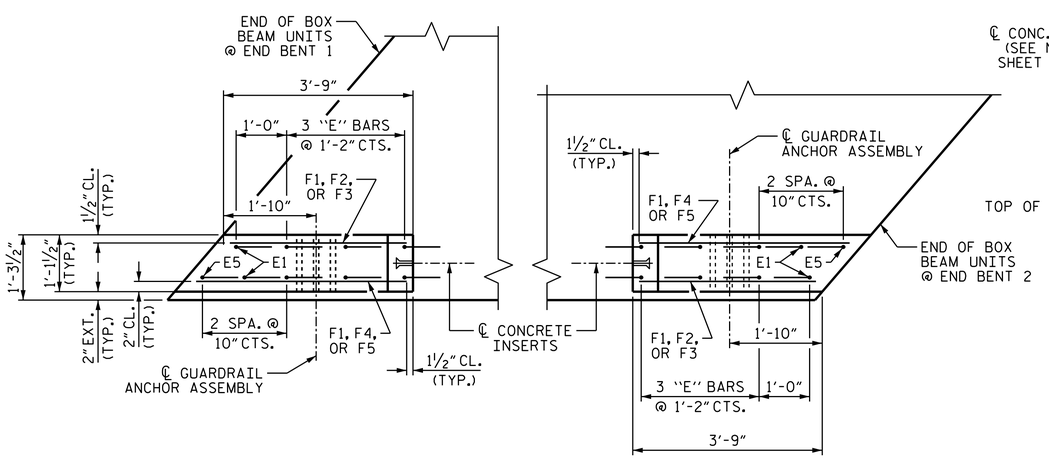

PLAN

OUSIDE EDGE OF BOX BEAM NOT SHOWN FOR CLARITY.

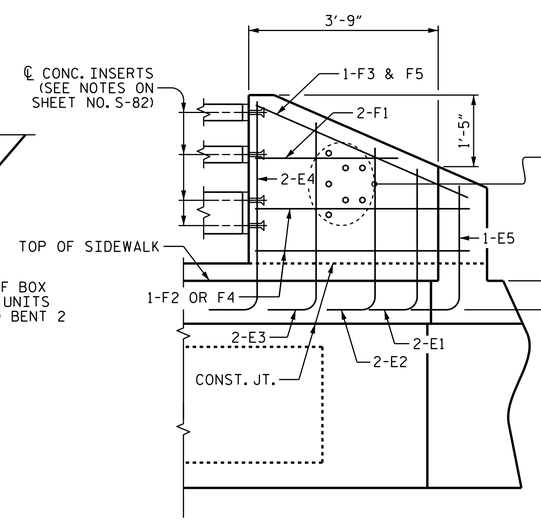

ELEVATION

SHOWING END BENT 2

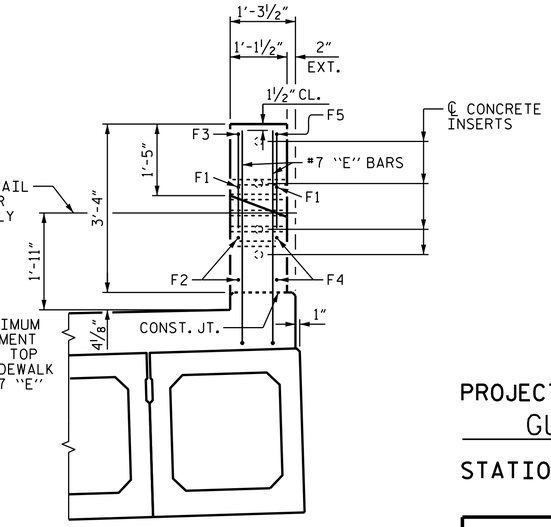

END VIEW

SHOWING END BENT 1

END POST DETAILS

ALL REINFORCING STEEL IN END POSTS SHALL BE EPOXY COATED.

PAYMENT FOR END POSTS SHALL BE INCLUDED IN THE PAY ITEMS IN THE "TOTAL OF BILL OF MATERIAL" FOR CLASS AA CONCRETE AND EPOXY COATED REINFORCING STEEL.

NORTH CAROLINA PROFESSIONAL SEAL 16301 ENGINEER TING-HSIUNG FANG

DocuSigned by: Ting-H. Fang E72088400977435...

12/3/2014

PROJECT NO. U-3615B

GUILFORD COUNTY

STATION: 233+87.56 -L-

STATE OF NORTH CAROLINA
DEPARTMENT OF TRANSPORTATION
RALEIGH

RAIL POST SPACINGS AND END OF RAIL DETAILS

RIGHT LANE

REVISIONS								SHEET NO.
NO.	BY:	DATE:	NO.	BY:	DATE:			S-83
1			3					TOTAL SHEETS
2			4					91

STR. #3

DRAWN BY : T. KIRSCHBAUM DATE : 12/31/13
CHECKED BY : T. H. FANG DATE : 1/2/14
DESIGN ENGINEER OF RECORD: T. H. FANG DATE : 1/7/14

03-DEC-2014 12:06
K:\TIPProjects-U\U3615b\Structures\Plans\Str3\Final plans\u3615b3_sd_sup.dgn
ttfang