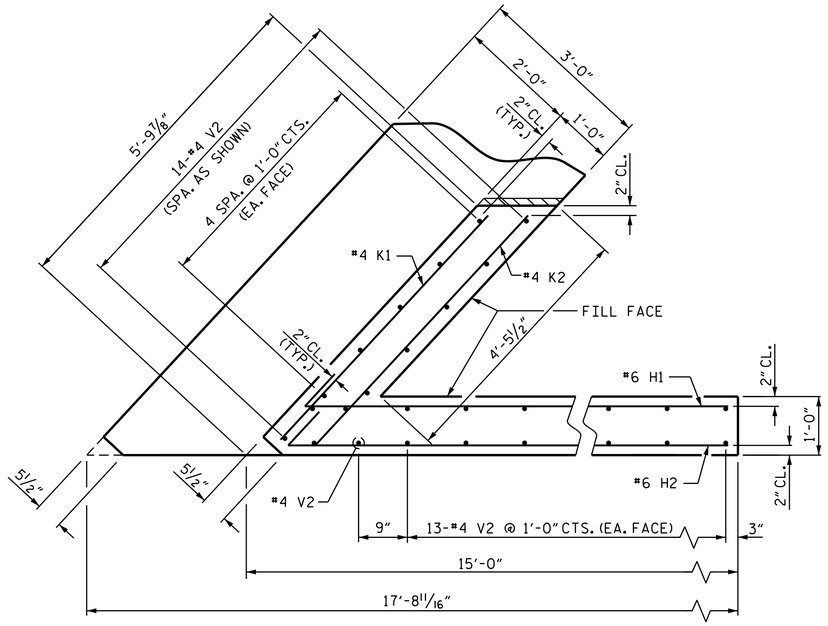

PLAN OF WING (W1)

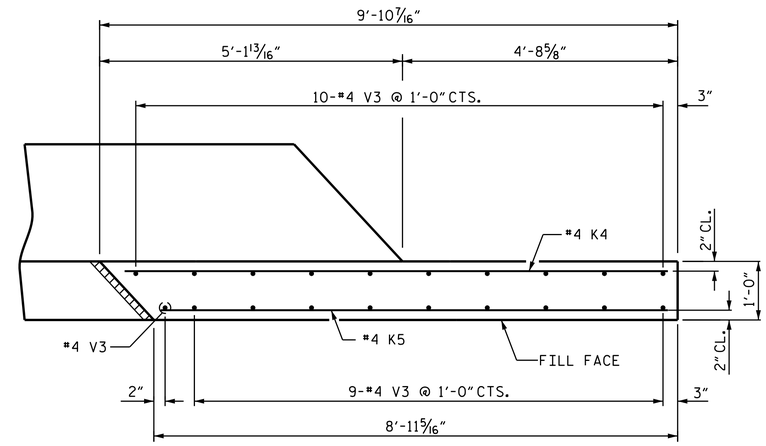

PLAN OF WING (W2)

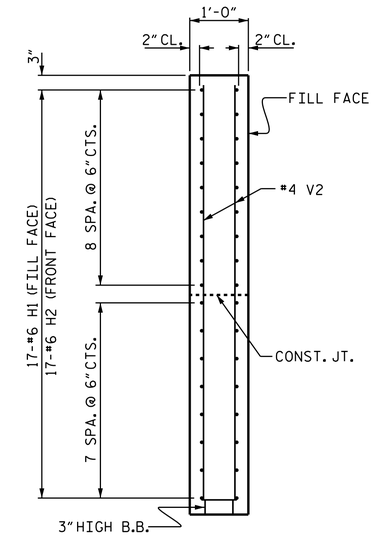

SECTION X-X

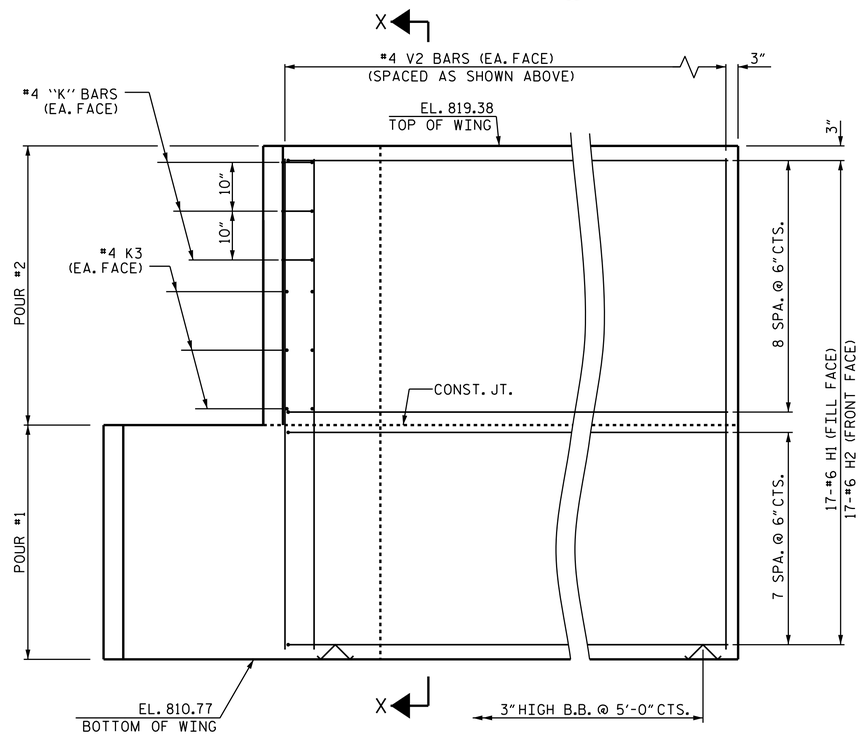

ELEVATION OF WING (W1)

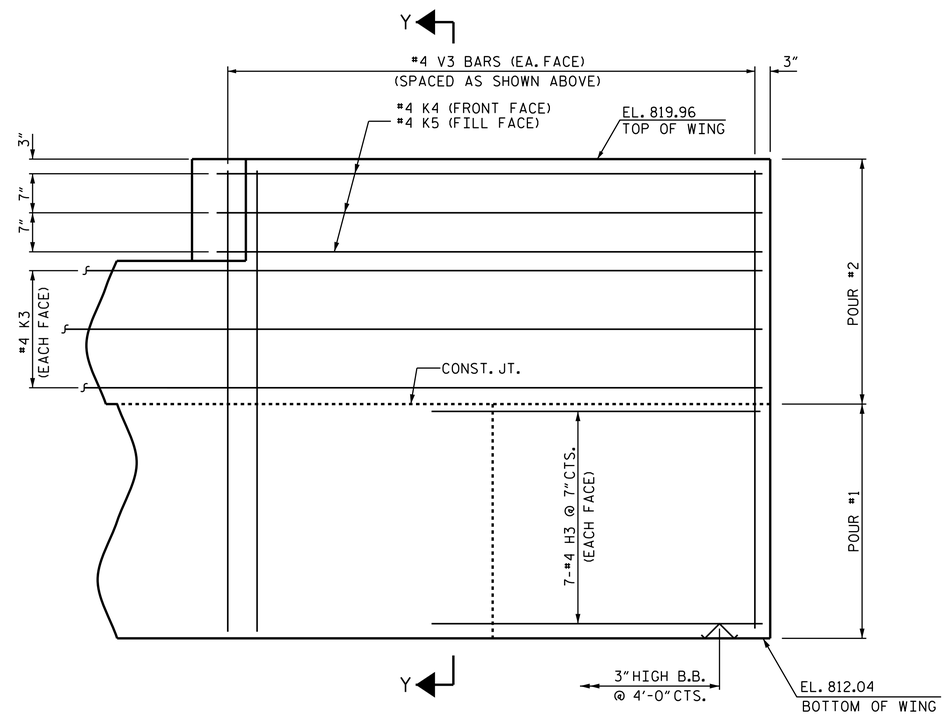

ELEVATION OF WING (W2)

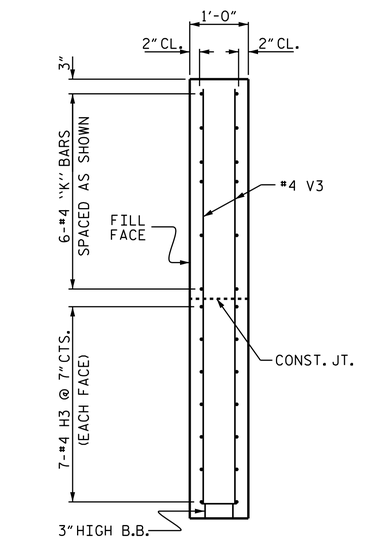

SECTION Y-Y

PROJECT NO. U-3615B

GUILFORD COUNTY

STATION: 233+87.56 -L-

SHEET 2 OF 5

STATE OF NORTH CAROLINA
DEPARTMENT OF TRANSPORTATION
RALEIGH

SUBSTRUCTURE

END BENT 1
WING DETAILS

LEFT LANE

WING DETAILS

ASSEMBLED BY :	R. P. PATEL	DATE : 12-12-13
CHECKED BY :	T.K.KIRSCHBAUM	DATE : 12-13-13
DESIGN ENGINEER OF RECORD:	E. I. OMILE	DATE : 1-7-14
DRAWN BY : WJH 12/11		
CHECKED BY : AAC 12/11		

NORTH CAROLINA PROFESSIONAL SEAL 16301 ENGINEER TING HSIUNG FANG

DocuSigned by: Ting H. Fang E72088A0D977435...

12/3/2014

REVISIONS						SHEET NO.
NO.	BY:	DATE:	NO.	BY:	DATE:	S-64
1			3			TOTAL SHEETS
2			4			91

03-DEC-2014 11:41
K:\TIPProjects-U\U3615b\Structures\Plans\Str2\Final plans\u3615b2_sd_ebts.dgn
tfang

STR. #2 STD. NO. EB_39_120S4_39BB