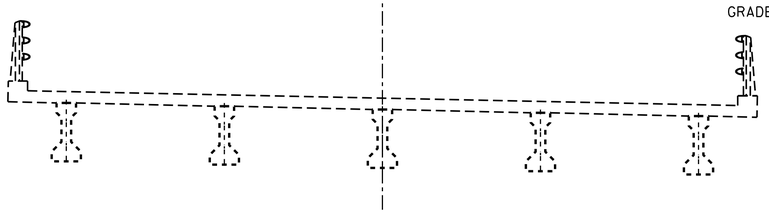

EXISTING STRUCTURE

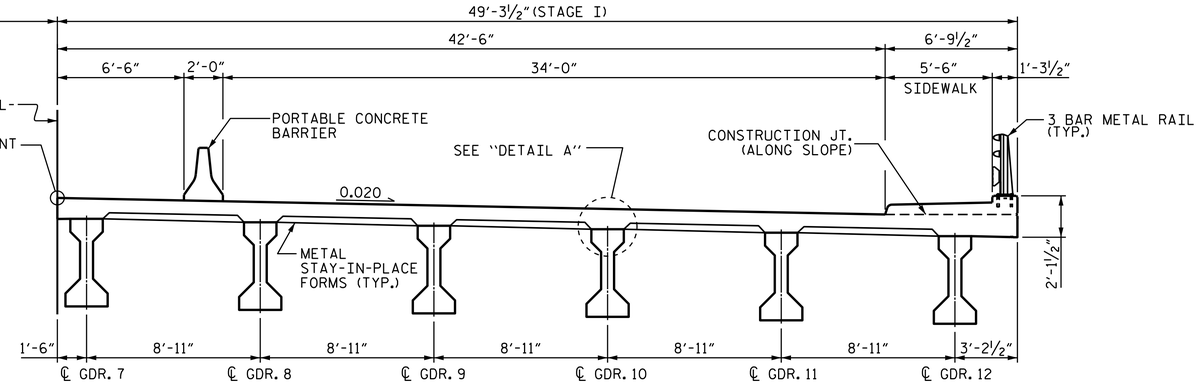

STAGE I CONSTRUCTION

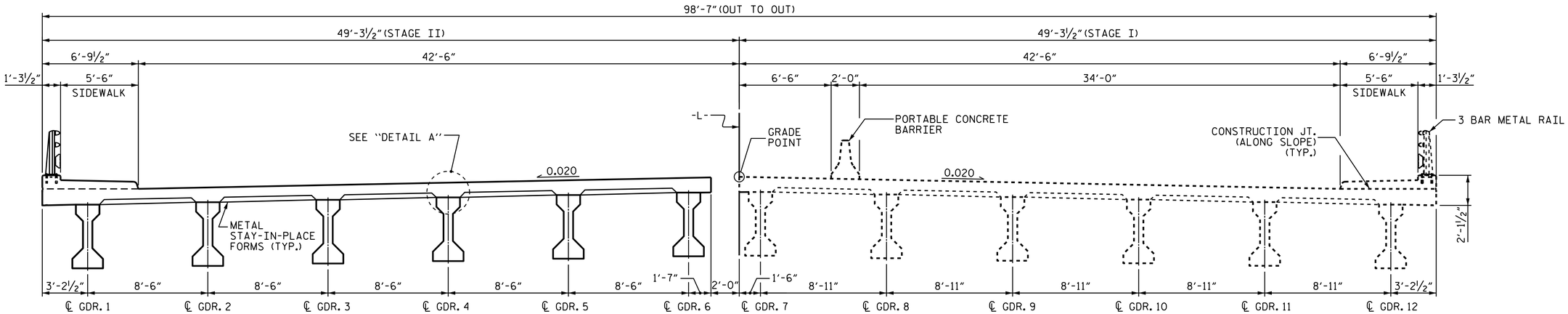

STAGE II CONSTRUCTION

STAGE I CONSTRUCTION

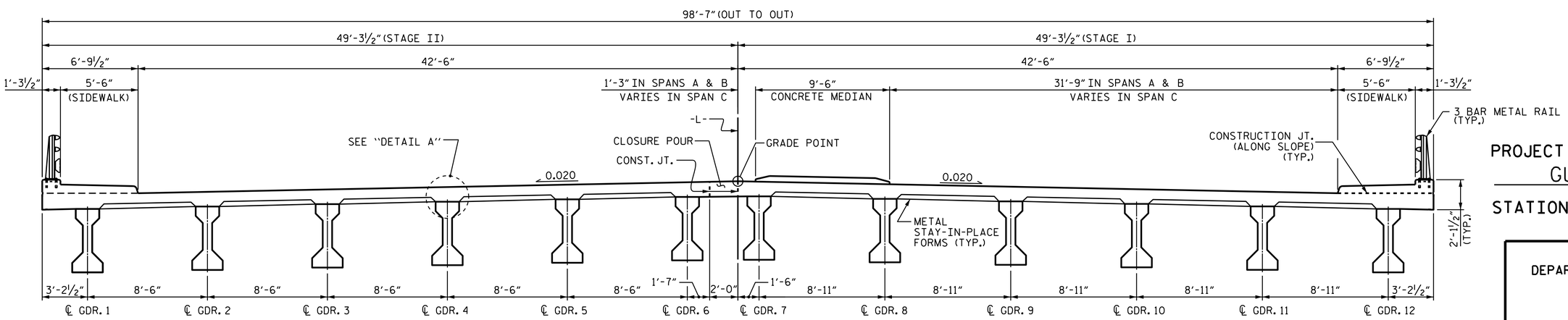

FINAL STAGE CONSTRUCTION

TYPICAL SECTION

SEE TRAFFIC CONTROL PLAN FOR LOCATION AND PAY LIMITS OF PORTABLE CONCRETE BARRIER.

NORTH CAROLINA PROFESSIONAL SEAL 16301 ENGINEER TING-HSIUNG FANG

DocuSigned by: Ting H. Fang
E72088400977435...

12/3/2014

PROJECT NO. U-3615B

GUILFORD COUNTY

STATION: 238+33.00 -L-

STATE OF NORTH CAROLINA
DEPARTMENT OF TRANSPORTATION
RALEIGH

SUPERSTRUCTURE

CONSTRUCTION SEQUENCES

REVISIONS						SHEET NO.
NO.	BY:	DATE:	NO.	BY:	DATE:	S-4
1			3			TOTAL SHEETS
2			4			91

DRAWN BY : R.P.PATEL DATE : 9-13-12
CHECKED BY : T. H. FANG DATE : 9-14-12
DESIGN ENGINEER OF RECORD: E.I. OMILE DATE : 1-7-14

03-DEC-2014 11:03
K:\TIPProjects-U\U3615b\Structures\Plans\str1\FinalPlans\u3615b_sd_gd.dgn
ttang

STR. #1