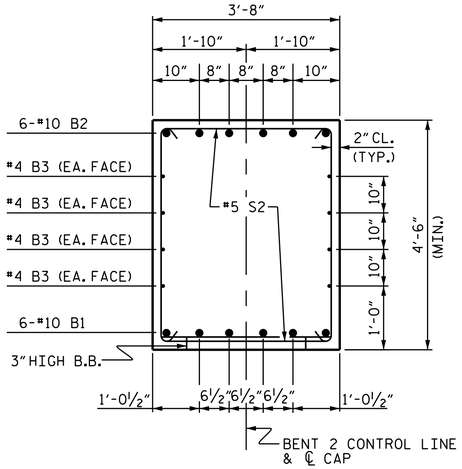

SECTION A-A

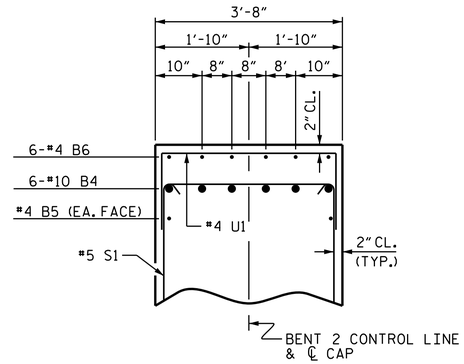

PARTIAL SECTION B-B

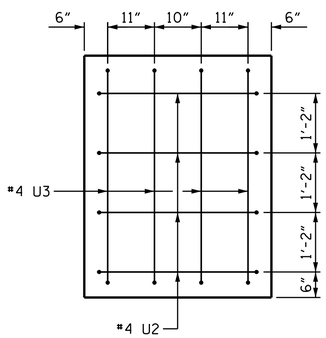

SECTION X-X

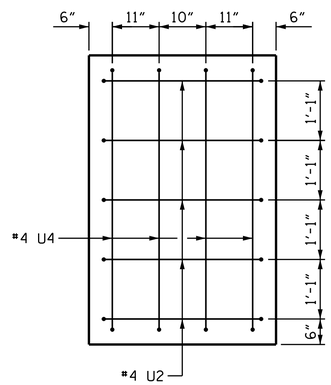

SECTION Y-Y

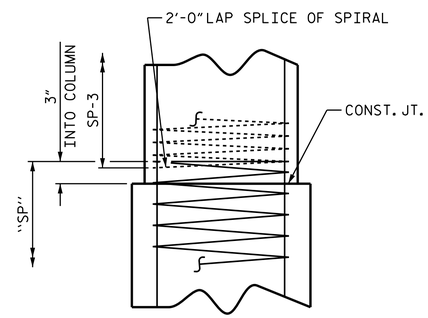

CONSTRUCTION JOINT DETAIL

BAR TYPES

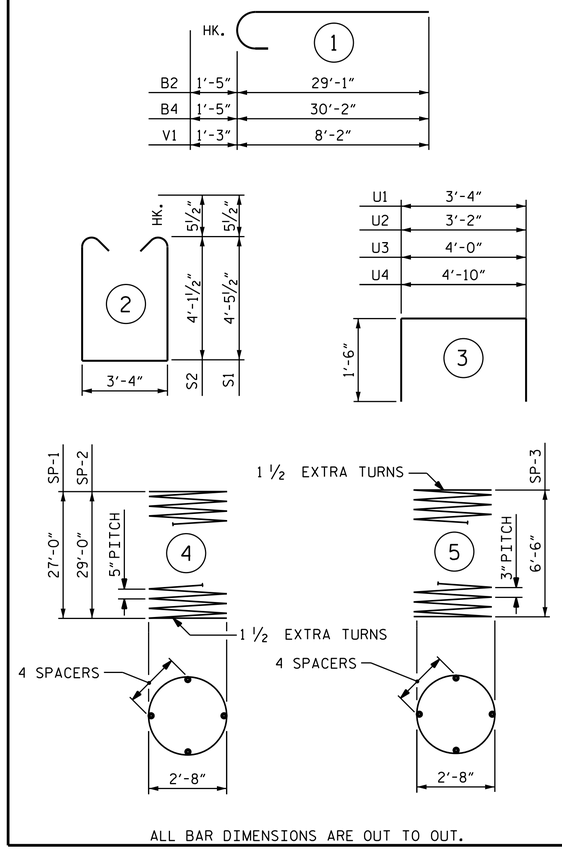

ALL BAR DIMENSIONS ARE OUT TO OUT.

BILL OF MATERIAL

BENT 2 - STAGE I

BAR	NO.	SIZE	TYPE	LENGTH	WEIGHT
B1	6	#10	STR	48'-4"	1248
B2	6	#10	1	30'-6"	787
B3	16	#4	STR	25'-5"	272
B4	6	#10	1	31'-7"	815
B5	2	#4	STR	21'-7"	29
B6	6	#4	STR	12'-5"	50
B13	6	#4	STR	3'-4"	7
M1	12	#9	STR	35'-0"	1428
M2	24	#9	STR	37'-0"	3019
S1	35	#5	2	13'-2"	481
S2	18	#5	2	12'-6"	235
U1	45	#4	3	6'-4"	190
U2	9	#4	3	6'-2"	37
U3	4	#4	3	7'-0"	19
U4	4	#4	3	7'-10"	21
V1	36	#9	1	9'-5"	1153
REINFORCING STEEL				LBS.	9,791
SP-1	1	✱	4	550'-0"	574
SP-2	2	✱	4	591'-0"	1232
SP-3	3	✱✱	5	232'-7"	466
SPIRAL COLUMN REINFORCING STEEL				LBS.	2,272
CLASS A CONCRETE					
POUR #2 - COLUMNS				CU. YDS.	5.1
POUR #3 - CAP				CU. YDS.	32.4
TOTAL				CU. YDS.	37.5
DRILLED PIER QUANTITIES:					
DRILLED PIER CONCRETE POUR #1 - DRILLED PIERS				CU. YDS.	30.8
3'-6" Ø DRILLED PIERS IN SOIL				LIN. FT.	67.0
3'-6" Ø DRILLED PIERS NOT IN SOIL				LIN. FT.	19.5
PERMANENT STEEL CASING FOR 3'-6" Ø DRILLED PIERS				LIN. FT.	62.4
CSL TUBES				LIN. FT.	364.0

✱ THE SP-1 & SP-2 SPIRAL REINFORCING STEEL SHALL BE W31 OR D-31 COLD DRAWN WIRE OR #5 PLAIN OR DEFORMED BAR.

✱✱ THE SP-3 SPIRAL REINFORCING STEEL SHALL BE W20 OR D-20 COLD DRAWN WIRE OR #4 PLAIN OR DEFORMED BAR.

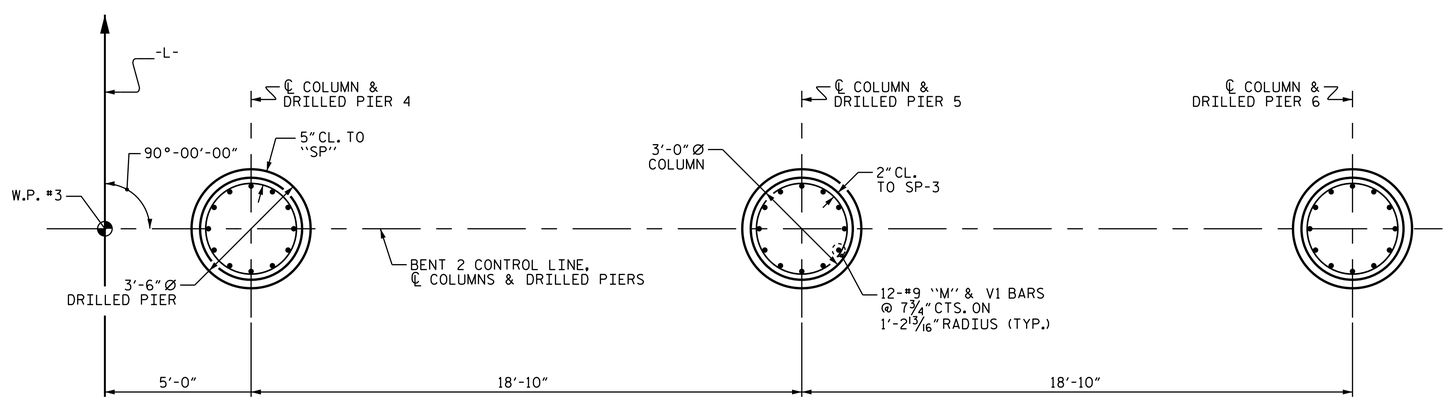

PLAN OF DRILLED PIERS

(REINFORCING STEEL AND DIMENSIONS ARE TYPICAL FOR EACH DRILLED PIER AND COLUMN)

PROJECT NO. U-3615B
GUILFORD COUNTY
STATION: 238+33.00 -L-

SHEET 2 OF 4

STATE OF NORTH CAROLINA
DEPARTMENT OF TRANSPORTATION
RALEIGH

SUBSTRUCTURE

BENT 2

STAGE I

NORTH CAROLINA PROFESSIONAL SEAL 16301 ENGINEER TING-HSIUNG FANG

DocuSigned by: Ting-H. Fang
E72088400977435...
12/3/2014

REVISIONS							SHEET NO.
NO.	BY:	DATE:	NO.	BY:	DATE:		S-37
1			3				TOTAL SHEETS
2			4				91

DRAWN BY : QT NGUYEN DATE : 9/10
CHECKED BY : E.C. LOCKLER DATE : 10/10
DESIGN ENGINEER OF RECORD: E. I. OMILE DATE : 1-7-14

03-DEC-2014 11:04
K:\TIPProjects-U\U3615b\Structures\Plans\str1\FinalPlans\U3615B_SD_B*.dgn
ttfang