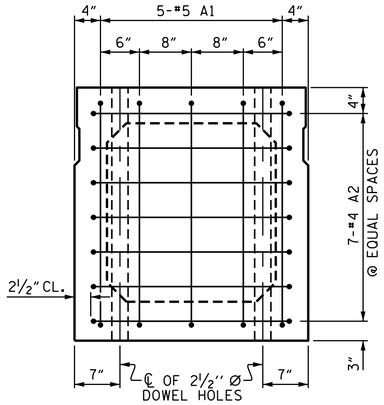

END ELEVATION

SHOWING PLACEMENT OF #5 & #4 "A" BARS AND LOCATION OF DOWEL HOLES. (INTERIOR BOX BEAM SECTION SHOWN-EXTERIOR SECTION SIMILAR EXCEPT SHEAR KEY LOCATION. STRAND LAYOUT NOT SHOWN.)

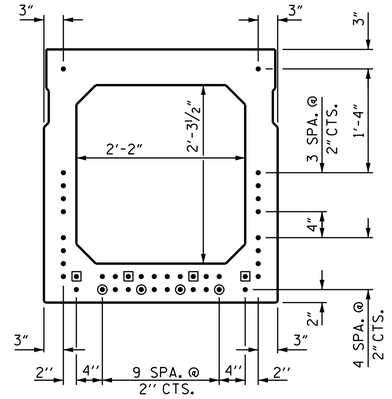

TYPICAL STRAND LOCATION

(42 STRANDS REQUIRED)

(INTERIOR BOX BEAM SECTION SHOWN-EXTERIOR SECTION SIMILAR EXCEPT SHEAR KEY LOCATION)

DEBONDING LEGEND

- ● FULLY BONDED STRANDS
- ▣ STRANDS DEBONDED FOR 4'-0" FROM END OF GIRDER
- ◉ STRANDS DEBONDED FOR 6'-0" FROM END OF GIRDER

0.6" Ø LOW RELAXATION STRAND LAYOUT

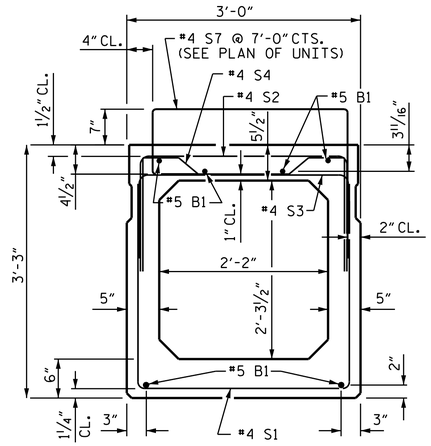

TYPE I & II BOX BEAM SECTION

TYPE II SECTION SHOWN - TYPE I SECTION SIMILAR EXCEPT SHEAR KEY LOCATION. (STRAND LAYOUT NOT SHOWN.)

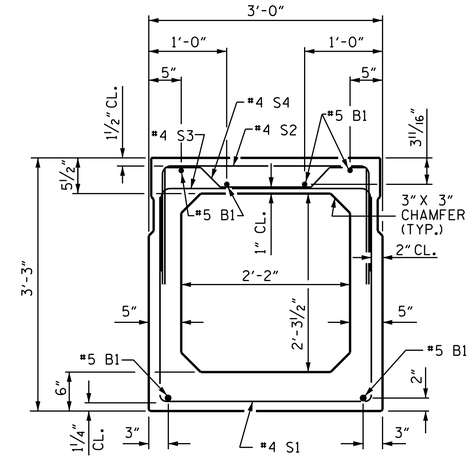

TYPE III BOX BEAM SECTION

(STRAND LAYOUT NOT SHOWN)

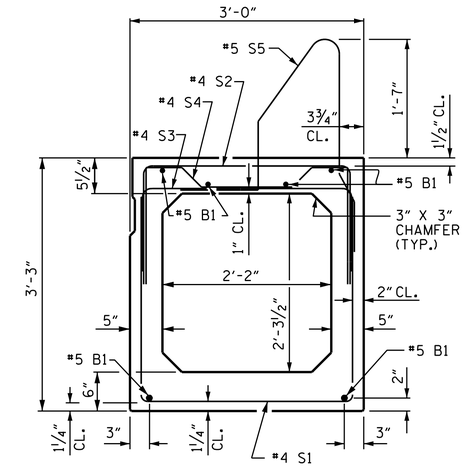

TYPE IV BOX BEAM SECTION

(STRAND LAYOUT NOT SHOWN)

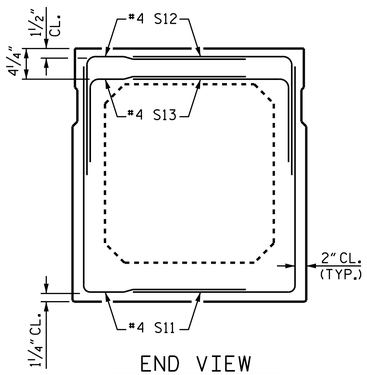

END VIEW

(SHOWING #4 "S" BARS IN END OF BEAM)

GRADE 270 STRANDS	
	0.6" Ø L.R.
AREA (SQUARE INCHES)	0.217
ULTIMATE STRENGTH (LBS. PER STRAND)	58,600
APPLIED PRESTRESS (LBS. PER STRAND)	43,950

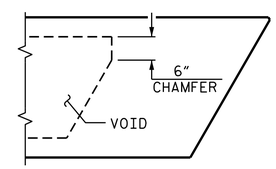

CHAMFER DETAIL

SHOWING 6" VOID CHAMFER

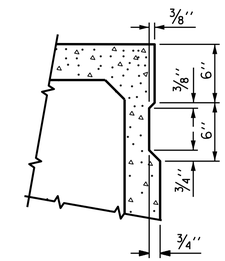

SHEAR KEY DETAIL

OMIT SHEAR KEY ON OUTSIDE FACE OF EXTERIOR BOX BEAMS.

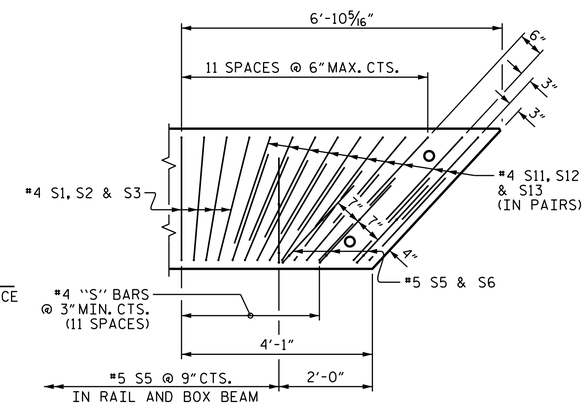

DETAIL "B"

TYPE IV UNIT SHOWN, OTHER UNITS SIMILAR EXCEPT OMIT #5 S5 BARS. "B" BARS AND "A" BARS NOT SHOWN.

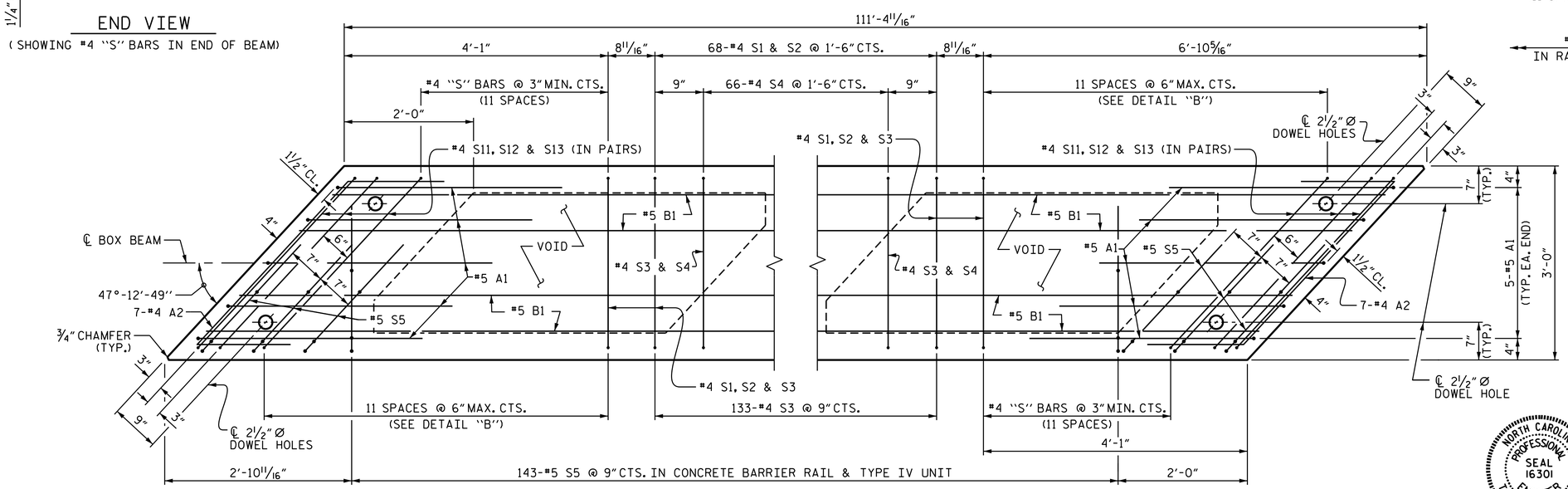

PLAN OF BOX BEAM

TYPE IV UNIT SHOWN, OTHER UNITS SIMILAR, EXCEPT OMIT #5 S5 BARS.
FOR LOCATION OF DIAPHRAGMS, SEE "PLAN OF SPAN A" SHEET.
FOR REINFORCING STEEL IN DIAHPRAGMS, SEE DIAPHRAGM DETAILS.

PROJECT NO. U-3615B
GUILFORD COUNTY
STATION: 233+87.56 -L-

SHEET 3 OF 5

STATE OF NORTH CAROLINA
DEPARTMENT OF TRANSPORTATION
RALEIGH

SUPERSTRUCTURE
3'-0" X 3'-3"
PRESTRESSED CONCRETE
BOX BEAM UNIT
LEFT LANE

NORTH CAROLINA PROFESSIONAL SEAL 16301 ENGINEER TING HSIUNG FANG

DocuSigned by: Ting H. Fang
E72088400977435...
12/3/2014

ASSEMBLED BY : P. K. NEWTON		DATE : 11/5/14	
CHECKED BY : T. H. FANG		DATE : 11/10/14	
DESIGN ENGINEER OF RECORD: P. K. NEWTON		DATE : 11/12/14	
DRAWN BY : TLA 5/05	ADDED 7/11/05		
CHECKED BY : GM 6/05	REV. 5/1/06	TLA/GM	
	REV. 10/1/11	MAA/GM	

REVISIONS						SHEET NO.
NO.	BY:	DATE:	NO.	BY:	DATE:	S-52
1			3			TOTAL SHEETS
2			4			91

STR. #2

STD. NO. PCBB6

03-DEC-2014 11:41
K:\TIPProjects-U\U3615b\Structures\Plans\Str2\Final plans\u3615b2_sd_bb.dgn
ttfang