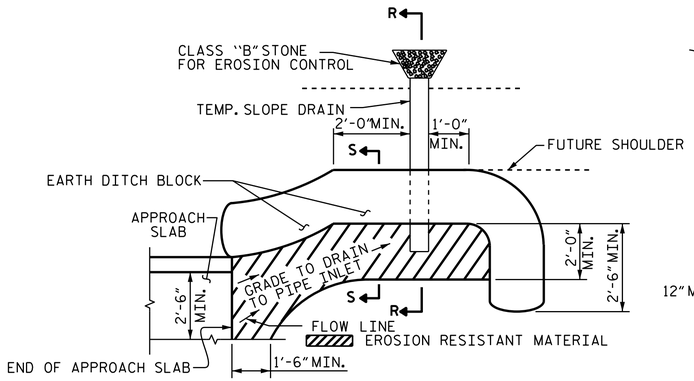

NOTE: IMMEDIATELY AFTER THE CONSTRUCTION OF THE APPROACH SLAB, THE CONTRACTOR SHALL PROVIDE TEMPORARY BERM AND SLOPE DRAIN. CONTRACTOR SHALL GRADE TO PIPE INLET AND PROVIDE EROSION RESISTANT MATERIAL AS SHOWN. THE EROSION RESISTANT MATERIAL SHALL BE EITHER 1) ASPHALT PLANT MIX, TYPE 1 OR TYPE 2, MIN. 2" DEPTH, 2) EROSION CONTROL MAT, OR 3) CONCRETE, AS DIRECTED BY THE ENGINEER. THE SLOPE DRAIN SHALL CONSIST OF A NON-PERFORATED TEMPORARY DRAINAGE PIPE, 12 INCHES IN DIAMETER.

PLAN VIEW

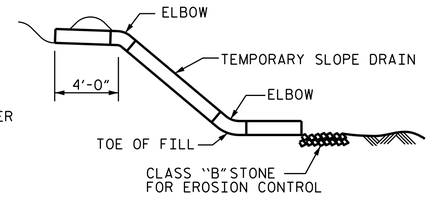

SECTION R-R

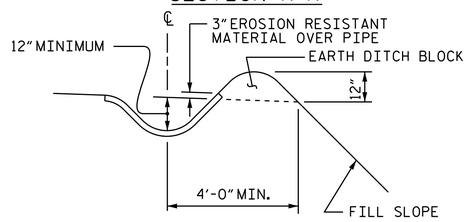

SECTION S-S

TEMPORARY BERM AND SLOPE DRAIN DETAILS

(TO BE USED WHEN SHOULDER BERM GUTTER IS REQUIRED)

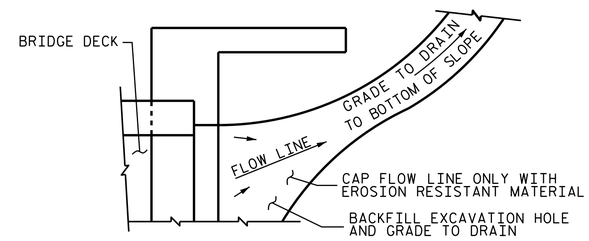

NOTE: IF THE APPROACH SLAB IS NOT CONSTRUCTED IMMEDIATELY AFTER THE BACKFILLING OF THE END BENT EXCAVATION, GRADE TO DRAIN TO THE BOTTOM OF THE SLOPE AND PROVIDE EROSION RESISTANT MATERIAL, SUCH AS FIBERGLASS ROVING OR AS DIRECTED BY THE ENGINEER TO PREVENT SOIL EROSION AND TO PROTECT THE AREA ADJACENT TO THE STRUCTURE. THE CONTRACTOR WILL BE REQUIRED TO REMOVE THESE MATERIALS PRIOR TO CONSTRUCTION OF THE APPROACH SLAB.

TEMPORARY DRAINAGE DETAIL

BILL OF MATERIAL

ONE APPROACH SLAB (2 REQ'D)

STAGE I

BAR	NO.	SIZE	TYPE	LENGTH	WEIGHT
✱ A1	52	#4	STR	26'-0"	903
A2	52	#4	STR	25'-9"	894
✱ B1	96	#5	STR	24'-2"	2420
B2	96	#6	STR	24'-8"	3557
REINFORCING STEEL				LBS.	4,451
✱ EPOXY COATED REINFORCING STEEL				LBS.	3,323
CLASS AA CONCRETE ✱✱				C.Y.	51.7

STAGE II

BAR	NO.	SIZE	TYPE	LENGTH	WEIGHT
✱ A3	52	#4	STR	24'-10"	863
A4	52	#4	STR	24'-9"	860
✱ B1	96	#5	STR	24'-2"	2420
B2	96	#6	STR	24'-8"	3557
REINFORCING STEEL				LBS.	4,416
✱ EPOXY COATED REINFORCING STEEL				LBS.	3,282
CLASS AA CONCRETE ✱✱				C.Y.	51.7

✱✱ QUANTITIES OF SIDEWALKS AND CONCRETE MEDIAN ON APPROACH SLABS ARE INCLUDED IN THE SUPERSTRUCTURE BILL OF MATERIAL AND PAID FOR AS PART OF THE REINFORCED CONCRETE DECK PAY ITEM.

SPLICE CHART

BAR	SIZE	SPLICE
✱ A1	#4	2'-0"
A2	#4	1'-9"

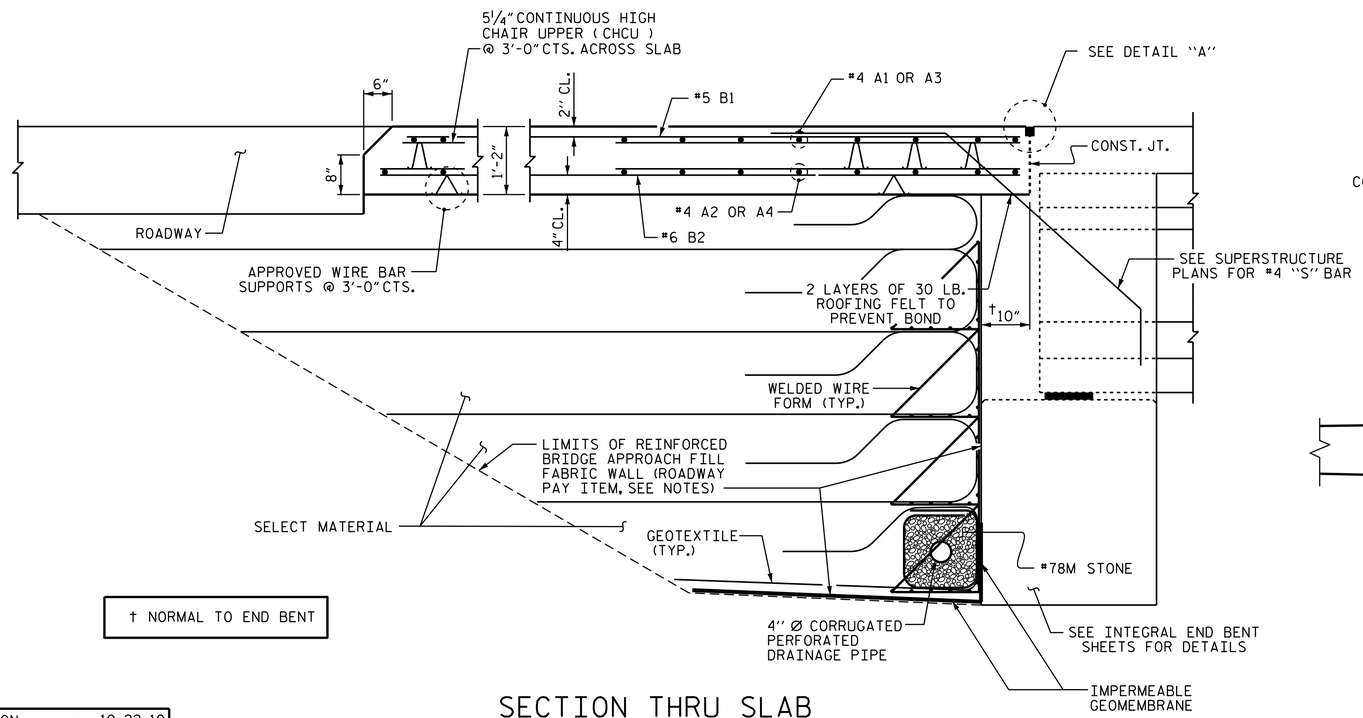

† NORMAL TO END BENT

SECTION THRU SLAB

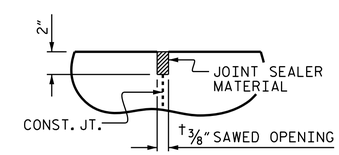

DETAIL "A"

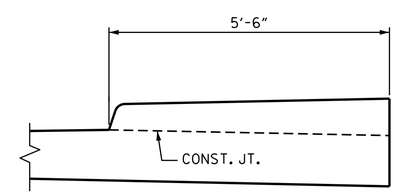

SECTION N-N

PROJECT NO. U-3615B

GUILFORD COUNTY

STATION: 238+33.00 -L-

SHEET 2 OF 2

STATE OF NORTH CAROLINA
DEPARTMENT OF TRANSPORTATION
RALEIGH

STANDARD

BRIDGE APPROACH SLABS

FOR INTEGRAL ABUTMENT

NORTH CAROLINA PROFESSIONAL SEAL 16301 ENGINEER TING HSIUNG FANG

DocuSigned by: Tay H. Fang E72088A0087743B...

12/3/2014

REVISIONS						SHEET NO.
NO.	BY:	DATE:	NO.	BY:	DATE:	S-45
1			3			TOTAL SHEETS
2			4			91

STR. #1 STD. NO. BAS11

DRAWN BY :	K.H. COMPTON	DATE :	10-22-10
CHECKED BY :	R.P.PATEL	DATE :	8-27-12
DESIGN ENGINEER OF RECORD:	T. H. FANG	DATE :	1/07/14

DRAWN BY : TLA 10/05		ADDED 5/1/06RR	KMM/GM
CHECKED BY : GM 5/06		REV. 10/1/11	MAA/GM
		REV. 12/21/11	MAA/GM

03-DEC-2014 11:04
K:\TIPProjects-U\U3615b\Structures\Plans\str1\FinalPlans\u3615b_sd_as.dgn
tfang