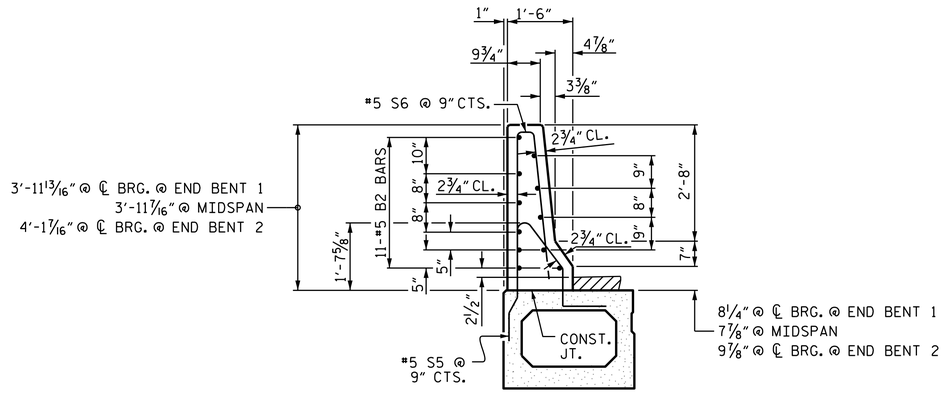

SECTION THRU RAIL

(TYPE IV BOX BEAM UNIT ONLY)

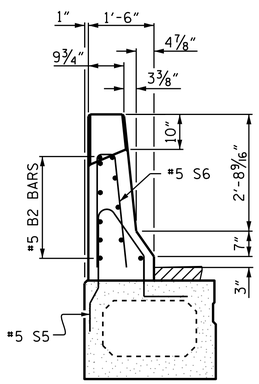

END VIEW

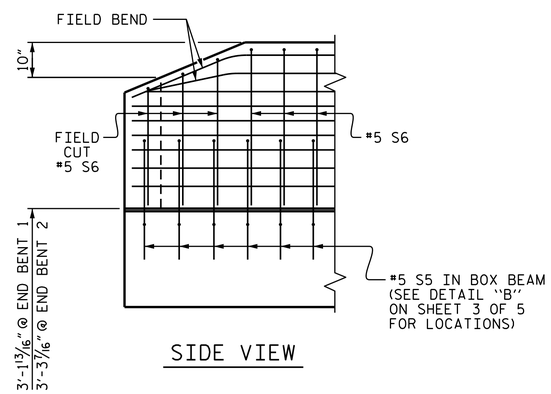

SIDE VIEW

END OF RAIL DETAILS

(TYPE IV BOX BEAM UNIT ONLY)

39" BOX BEAM UNITS REQUIRED			
SPAN A			
	NUMBER	LENGTH	TOTAL LENGTH
TYPE I	1	107'-9⅜"	107'-9⅜"
TYPE II	1	107'-9⅜"	107'-9⅜"
TYPE III	15	107'-9⅜"	1616'-8⅜"
TYPE IV	1	107'-9⅜"	107'-9⅜"
TOTAL	18		1940.04'

GROOVING BRIDGE FLOORS		
APPROACH SLABS	2048	SQ.FT.
BRIDGE DECK	4566	SQ.FT.
TOTAL	6614	SQ.FT.

BAR TYPES

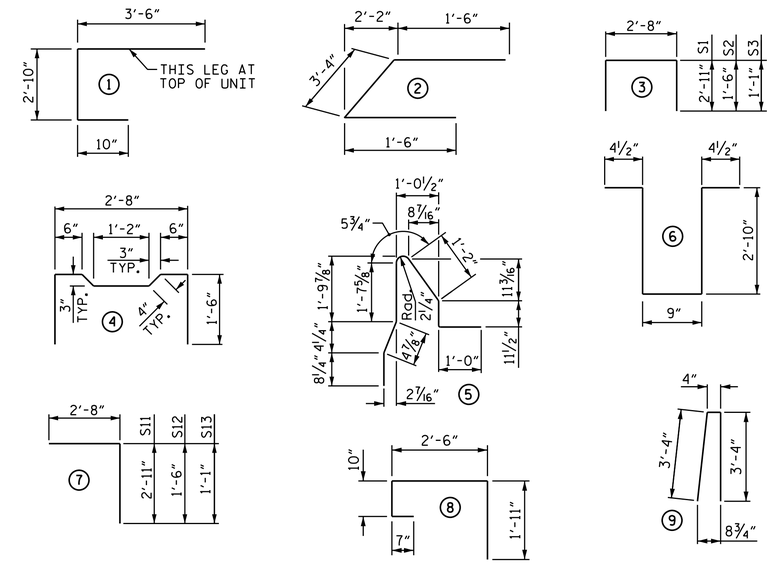

ALL BAR DIMENSIONS ARE OUT TO OUT

BILL OF MATERIAL FOR ONE BOX BEAM UNIT

				TYPE I (EXTERIOR UNIT)		TYPE II (INTERIOR UNIT)		TYPE III (INTERIOR UNIT)		TYPE IV (EXTERIOR UNIT)	
BAR	NUMBER	SIZE	TYPE	LENGTH	WEIGHT	LENGTH	WEIGHT	LENGTH	WEIGHT	LENGTH	WEIGHT
A1	10	#5	1	7'-2"	75	7'-2"	75	7'-2"	75	7'-2"	75
A2	50	#4	2	6'-4"	212	6'-4"	212	6'-4"	212	6'-4"	212
B1	12	#5	STR	54'-10"	686	54'-10"	686	54'-10"	686	54'-10"	686
K1	18	#4	6	7'-2"	86	7'-2"	86	7'-2"	86	7'-2"	86
K2	12	#4	STR	3'-4"	27	3'-4"	27	3'-4"	27	3'-4"	27
S1	74	#4	3	8'-6"	420	8'-6"	420	8'-6"	420	8'-6"	420
S2	74	#4	3	5'-8"	280	5'-8"	280	5'-8"	280	5'-8"	280
S3	137	#4	3	4'-10"	442	4'-10"	442	4'-10"	442	4'-10"	442
S4	64	#4	4	5'-10"	249	5'-10"	249	5'-10"	249	5'-10"	249
S11	40	#4	7	5'-7"	149	5'-7"	149	5'-7"	149	5'-7"	149
S12	40	#4	7	4'-2"	111	4'-2"	111	4'-2"	111	4'-2"	111
S13	40	#4	7	3'-9"	100	3'-9"	100	3'-9"	100	3'-9"	100
✱ S5	145	#5	5	--	--	--	--	--	--	6'-4"	958
✱ S7	15	#4	8	5'-10"	58	5'-10"	58	--	--	--	--
REINFORCING STEEL					2,837 LBS.		2,837 LBS.		2,837 LBS.		2,837 LBS.
✱ EPOXY COATED REINF. STEEL					58 LBS.		58 LBS.				958 LBS.
10000 P.S.I. CONCRETE					21.5 CU. YDS.		21.4 CU. YDS.		21.4 CU. YDS.		21.5 CU. YDS.
0.6" Ø L.R. STRANDS				No.	36	No.	36	No.	36	No.	36

BILL OF MATERIAL FOR CONCRETE BARRIER RAIL

BAR	NUMBER	SIZE	TYPE	LENGTH	WEIGHT
✱B2	88	#5	STR	15'-4"	1407
✱S6	145	#5	9	7'-0"	1059
✱ EPOXY COATED REINFORCING STEEL					2,466 LBS.
CLASS AA CONCRETE					17.7 CU. YDS.
TOTAL CONCRETE BARRIER RAIL					107.8 LIN. FT.

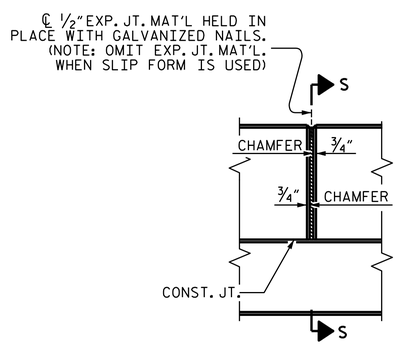

ELEVATION AT EXPANSION JOINTS

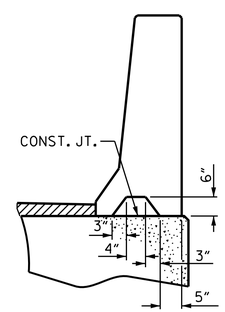

SECTION S-S

AT DAM IN OPEN JOINT
(THIS IS TO BE USED ONLY WHEN SLIP FORM IS USED)

GROOVED CONTRACTION JOINTS, ½" IN DEPTH, SHALL BE TOOLED IN ALL EXPOSED FACES OF THE BARRIER RAIL AND IN ACCORDANCE WITH ARTICLE 825-10(B) OF THE STANDARD SPECIFICATIONS. THE CONTRACTION JOINT SHALL BE LOCATED AT EACH THIRD POINT BETWEEN BARRIER RAIL EXPANSION JOINTS. ONLY ONE CONTRACTION JOINT IS REQUIRED AT MIDPOINT OF BARRIER RAIL SEGMENTS LESS THAN 20 FEET IN LENGTH AND NO CONTRACTION JOINTS ARE REQUIRED FOR THOSE SEGMENTS LESS THAN 10 FEET IN LENGTH.

PROJECT NO. U-3615B
GUILFORD COUNTY
STATION: 233+87.56 -L-

SHEET 5 OF 5

STATE OF NORTH CAROLINA
DEPARTMENT OF TRANSPORTATION
RALEIGH

SUPERSTRUCTURE
3'-0" X 3'-3"
PRESTRESSED CONCRETE
BOX BEAM DETAILS
RIGHT LANE

NORTH CAROLINA PROFESSIONAL SEAL 16301 ENGINEER TING HSIUNG FANG

DocuSigned by: Ting H. Fang
E72088400977435...
12/3/2014

REVISIONS						SHEET NO.
NO.	BY:	DATE:	NO.	BY:	DATE:	S-77
1			3			TOTAL SHEETS
2			4			91

STR. #3

DRAWN BY : P. K. NEWTON DATE : 10/10/14
CHECKED BY : T. H. FANG DATE : 10/13/14
DESIGN ENGINEER OF RECORD: P. K. NEWTON DATE : 10/14/14

03-DEC-2014 12:06
K:\TIPProjects-U\U3615b\Structures\Plans\Str3\Final plans\u3615b3_sd_bb.dgn
ttfang