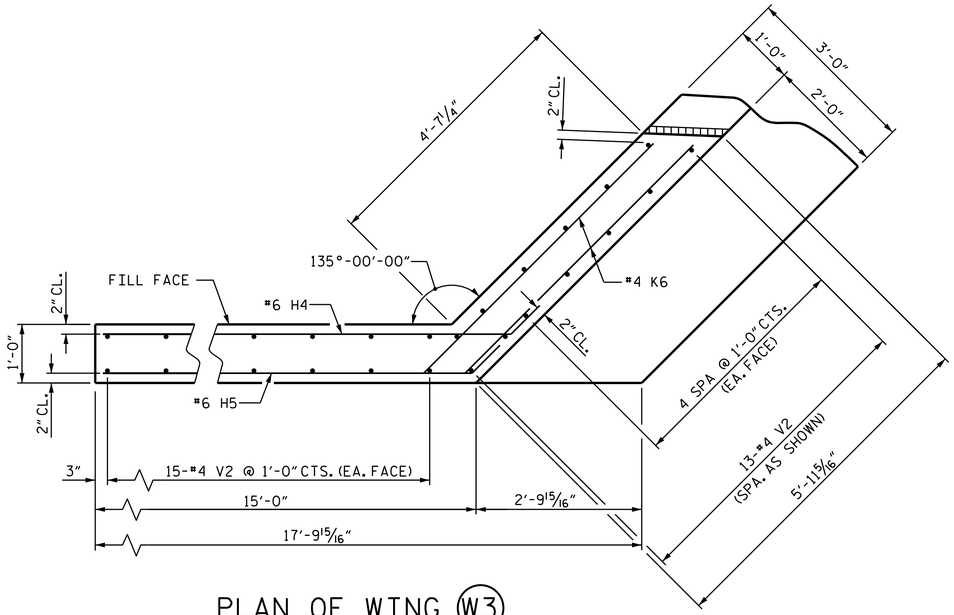

PLAN OF WING (W3)

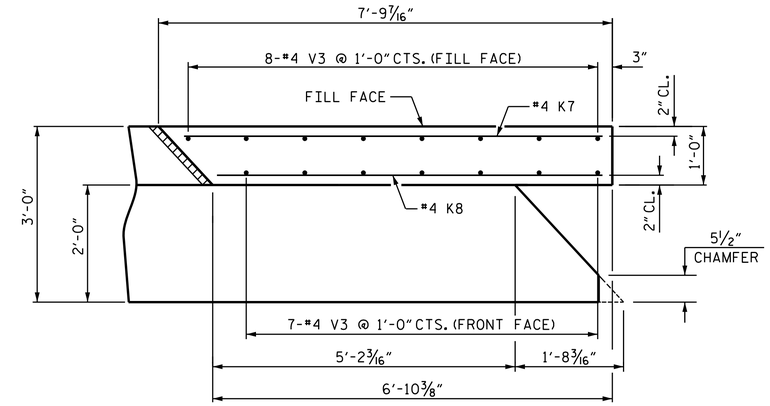

PLAN OF WING (W4)

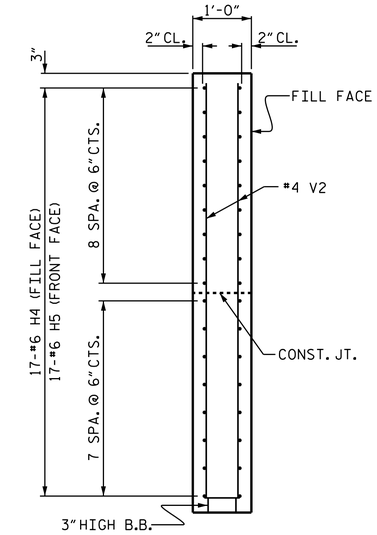

SECTION X-X

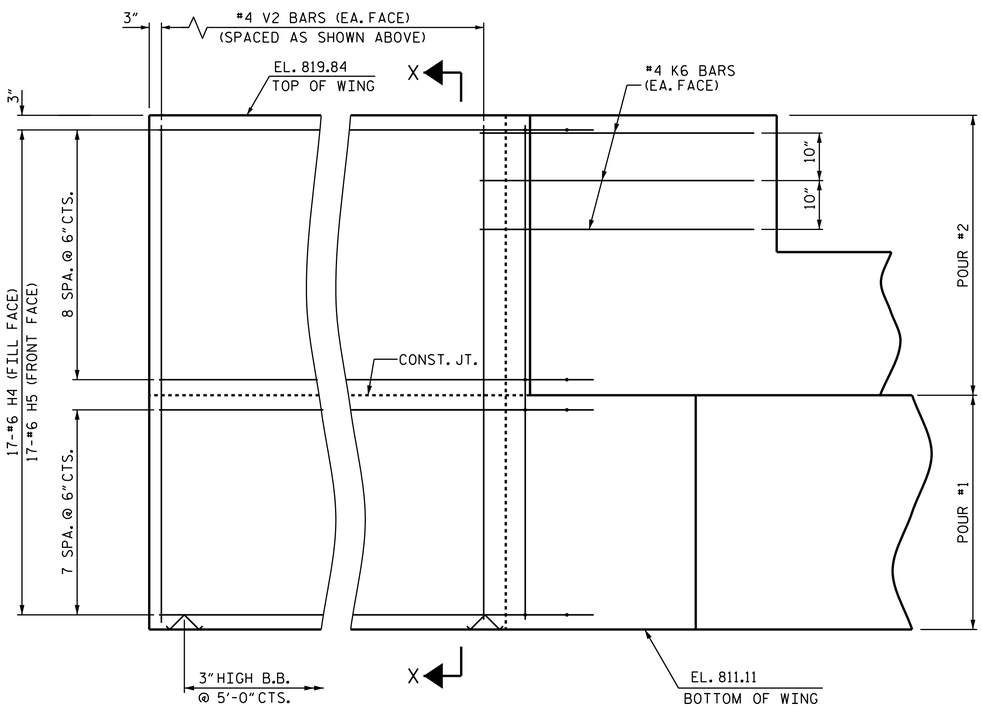

ELEVATION OF WING (W3)

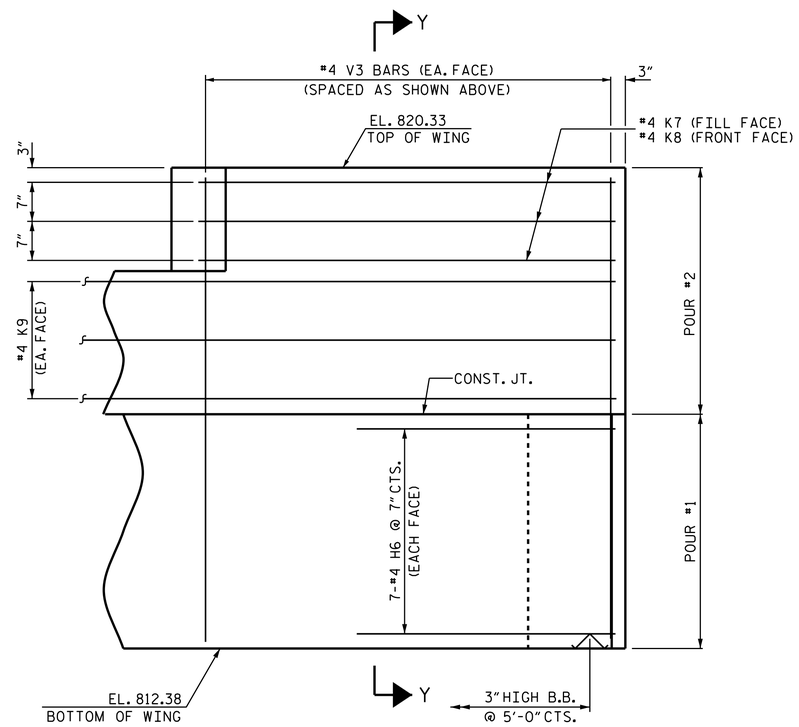

ELEVATION OF WING (W4)

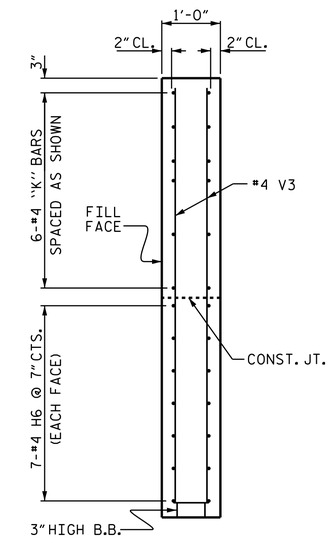

SECTION Y-Y

WING DETAILS

ASSEMBLED BY :	R. P. PATEL	DATE : 12-12-13
CHECKED BY :	T.K.KIRSCHBAUM	DATE : 12-13-13
DESIGN ENGINEER OF RECORD:	E. I. OMILE	DATE : 1-7-14
DRAWN BY : WJH 12/11		
CHECKED BY : AAC 12/11		

NORTH CAROLINA PROFESSIONAL SEAL 16301 ENGINEER TING HSIUNG FANG

DocuSigned by: Ting H. Fang
E72088A00977435...
12/3/2014

PROJECT NO. U-3615B
GUILFORD COUNTY
STATION: 233+87.56 -L-

SHEET 4 OF 5

STATE OF NORTH CAROLINA
DEPARTMENT OF TRANSPORTATION
RALEIGH

SUBSTRUCTURE

END BENT 2
WING DETAILS

LEFT LANE

REVISIONS							SHEET NO.
NO.	BY:	DATE:	NO.	BY:	DATE:		S-66
1			3				TOTAL SHEETS
2			4				91

STR. #2 STD. NO. EB_39_120S4_39BB

03-DEC-2014 11:41
K:\TIPProjects-U\U3615b\Structures\Plans\Str2\Finalplans\u3615b2_sd_ebts.dgn
ttfang