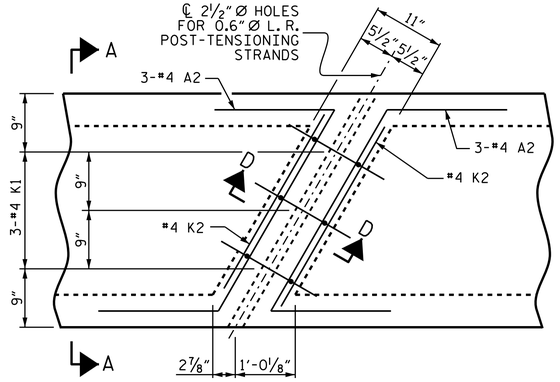

PLAN

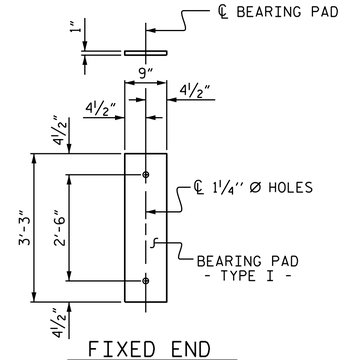

FIXED END
(TYPE I - 26 REQ'D)

ELASTOMERIC BEARING DETAILS

ELASTOMER IN ALL BEARINGS SHALL HAVE A SHEAR MODULUS OF 0.160 KSI.

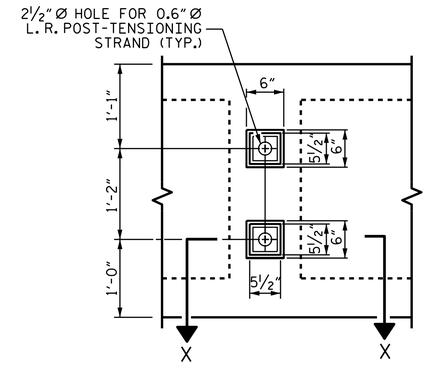

VIEW Y-Y
SHOWING ELEVATION VIEW OF GROUTED RECESS

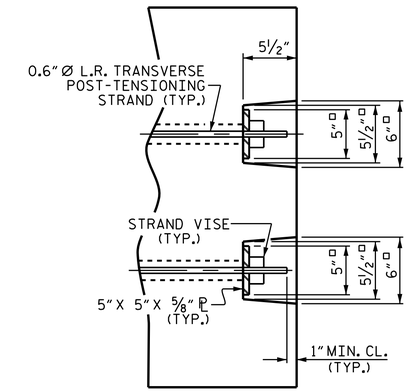

DETAIL "C"

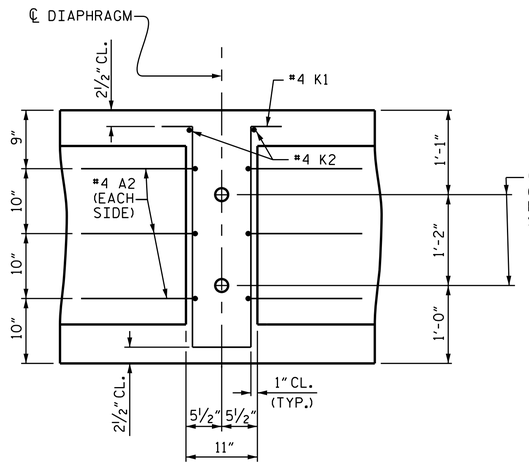

SECTION D-D

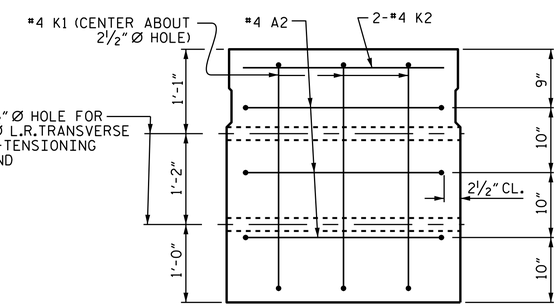

SECTION A-A
VOIDS NOT SHOWN

DOUBLE DIAPHRAGM DETAILS

#4 "S" BARS NOT SHOWN. #4 "S" BARS MAY BE SHIFTED SLIGHTLY TO CLEAR 2½"Ø HOLE.

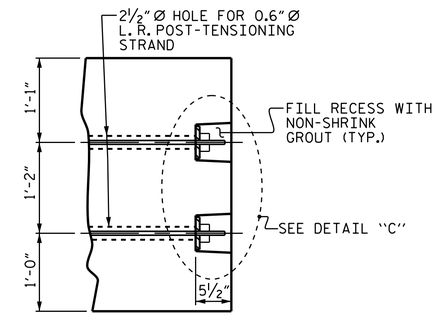

PART SECTION AT RECESS

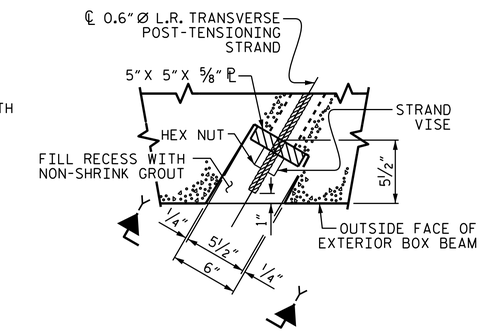

SECTION X-X

GROUTED RECESS DETAIL AT END OF POST-TENSIONED STRANDS OF EXTERIOR BOX BEAM

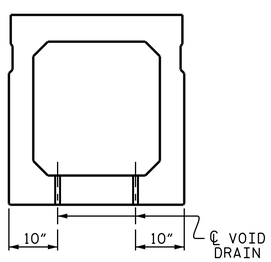

SECTION B-B

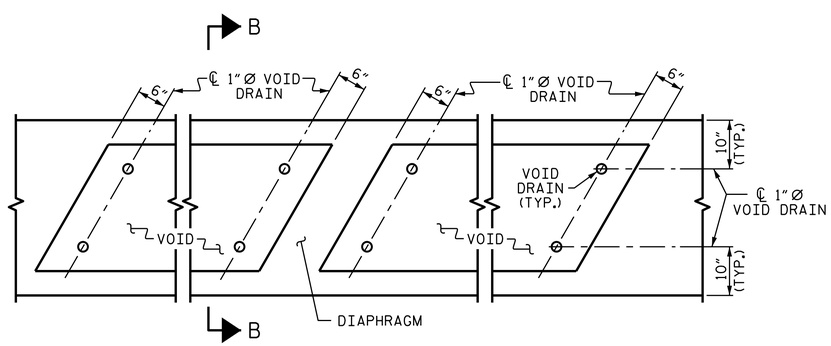

PART PLAN

VOID DRAIN DETAILS

(DIMENSIONS SHOWN ARE TYPICAL FOR EACH VOID)

DEAD LOAD DEFLECTION AND CAMBER			
3'-0" x 3'-3" BOX BEAM UNITS 0.6"Ø L.R. STRAND	UNITS 1-5	UNITS 6-10	UNITS 11-13
CAMBER (BOX BEAM ALONE IN PLACE)	2" ↑	2" ↑	2" ↑
DEFLECTION DUE TO SIDEWALK	15/16" ↓		
DEFLECTION DUE TO CONCRETE BARRIER RAIL			13/16" ↓
DEFLECTION DUE TO CONCRETE WEARING SURFACE	9/16" ↓	7/16" ↓	½" ↓
FINAL CAMBER	½" ↑	1 9/16" ↑	11/16" ↑

DOES NOT INCLUDE FUTURE WEARING SURFACE.

PROJECT NO. U-3615B
GUILFORD COUNTY
STATION: 233+87.56 -L-

SHEET 4 OF 5

NORTH CAROLINA PROFESSIONAL SEAL 16301 ENGINEER TING HSIUNG FANG

DocuSigned by: Ting H. Fang
E72088400977435...
12/3/2014

STATE OF NORTH CAROLINA
DEPARTMENT OF TRANSPORTATION
RALEIGH

SUPERSTRUCTURE
3'-0" X 3'-3"
PRESTRESSED CONCRETE
BOX BEAM UNIT
LEFT LANE

REVISIONS						SHEET NO.
NO.	BY:	DATE:	NO.	BY:	DATE:	S-53
1			3			TOTAL SHEETS
2			4			91

ASSEMBLED BY : P.K. NEWTON		DATE : 11/5/14	
CHECKED BY : T.H. FANG		DATE : 11/10/14	
DESIGN ENGINEER OF RECORD: P.K. NEWTON		DATE : 11/12/14	
DRAWN BY : TLA 5/05	ADDED 7/11/05		
CHECKED BY : GM 6/05	REV. 5/1/06	TLA/GM	
	REV. 10/1/11	MAA/GM	

03-DEC-2014 11:41
K:\TIPProjects-U\U3615b\Structures\Plans\Str2\Final plans\u3615b2_sd_bb.dgn
ttfang

STR. #2

STD. NO. PCBB7