NOTES

STRUCTURAL CONCRETE ANCHOR ASSEMBLY

THE STRUCTURAL CONCRETE ANCHOR ASSEMBLY SHALL CONSIST OF THE FOLLOWING COMPONENTS:

A. FERRULES SHALL BE MADE FROM STEEL MEETING THE REQUIREMENTS OF AASHTO M169, GRADE 12L14 AND SHALL HAVE A MINIMUM LENGTH OF THREADS OF 2" FOR 3/4" FERRULES AND 1 3/4" FOR 5/8" FERRULES.

B. 3 - 3/4" Ø X 2 1/2" BOLTS WITH WASHERS. BOLTS SHALL CONFORM TO THE REQUIREMENTS OF ASTM A307. BOLTS AND WASHERS SHALL BE GALVANIZED. AT THE CONTRACTOR'S OPTION, STAINLESS STEEL BOLTS AND WASHERS MAY BE USED AS AN ALTERNATE FOR THE 3/4" Ø X 2 1/2" GALVANIZED BOLTS AND WASHERS. THEY SHALL CONFORM TO OR EXCEED THE MECHANICAL REQUIREMENTS OF ASTM A307. THE USE OF THIS ALTERNATE SHALL BE APPROVED BY THE ENGINEER.

C. 2 - 5/8" Ø X 2 1/4" BOLTS WITH WASHERS. BOLTS SHALL CONFORM TO THE REQUIREMENTS OF ASTM A307. BOLTS AND WASHERS SHALL BE GALVANIZED. AT THE CONTRACTOR'S OPTION, STAINLESS STEEL BOLTS AND WASHERS MAY BE USED AS AN ALTERNATE FOR THE 5/8" Ø X 2 1/4" GALVANIZED BOLTS AND WASHERS. THEY SHALL CONFORM TO OR EXCEED THE MECHANICAL REQUIREMENTS OF ASTM A307. THE USE OF THIS ALTERNATE SHALL BE APPROVED BY THE ENGINEER.

D. WIRE STRUT SHOWN IN THE CONCRETE ANCHOR ASSEMBLY DETAIL IS THE MINIMUM ALLOWABLE SIZE AND SHALL HAVE A MINIMUM TENSILE STRENGTH OF 100,000 PSI. AS AN OPTION, A 7/16" Ø WIRE STRUT WITH A MINIMUM TENSILE STRENGTH OF 90,000 PSI IS ACCEPTABLE.

E. THE METAL RAIL ANCHOR ASSEMBLIES TO BE HOT DIPPED GALVANIZED TO CONFORM TO REQUIREMENTS OF AASHTO M111.

F. THE COST OF THE METAL RAIL ANCHOR ASSEMBLY WITH BOLTS AND WASHERS COMPLETE IN PLACE SHALL BE INCLUDED IN THE PRICE BID FOR LINEAR FEET OF METAL RAIL.

G. BOLTS TO BE TIGHTENED ONE-HALF TURN WITH A WRENCH FROM A FINGER-TIGHT POSITION.

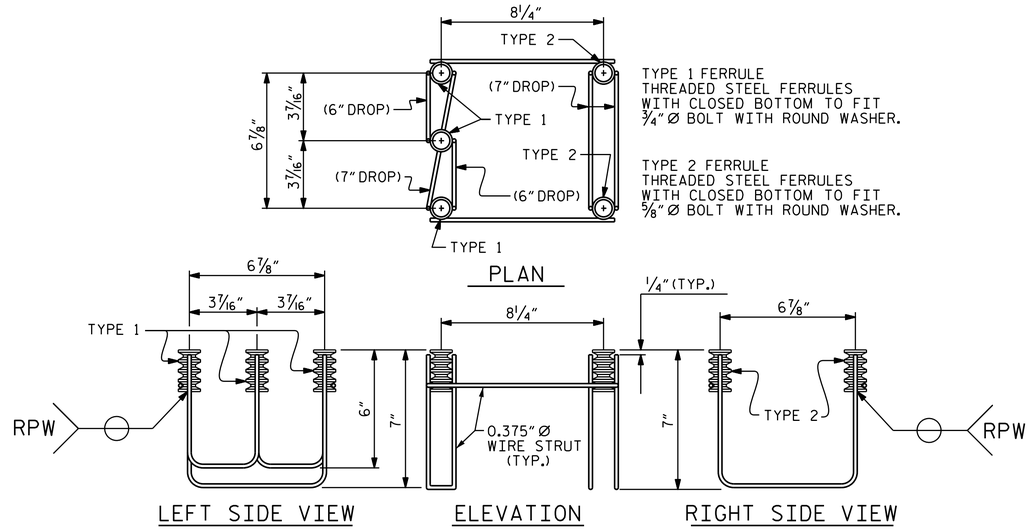

5-BOLT METAL RAIL ANCHOR ASSEMBLY

(19 ASSEMBLIES REQUIRED)

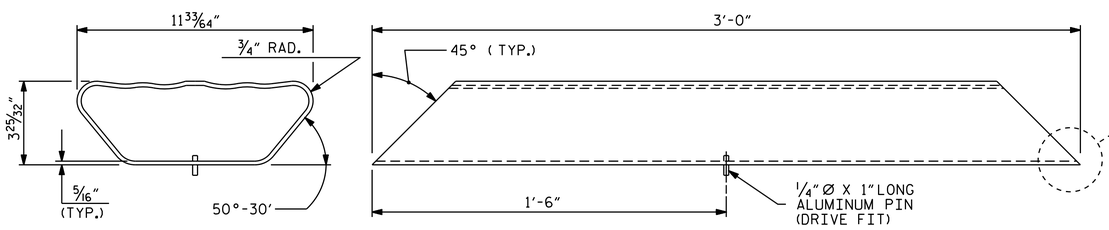

BOTTOM RAIL EXPANSION BAR

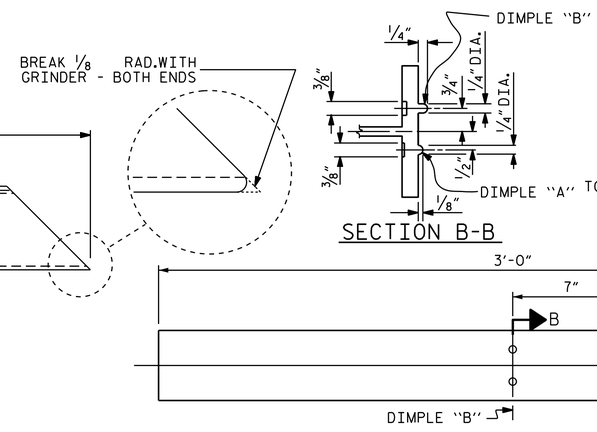

TOP & MIDDLE RAIL EXPANSION BAR

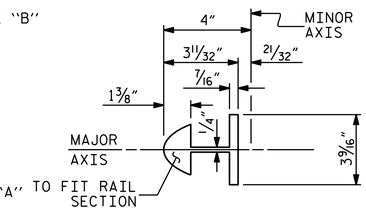

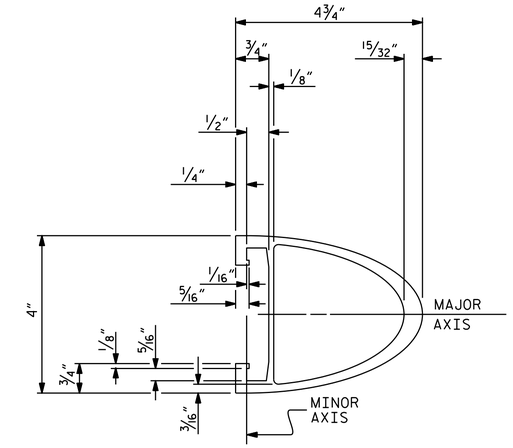

TOP & MIDDLE RAIL SECTION

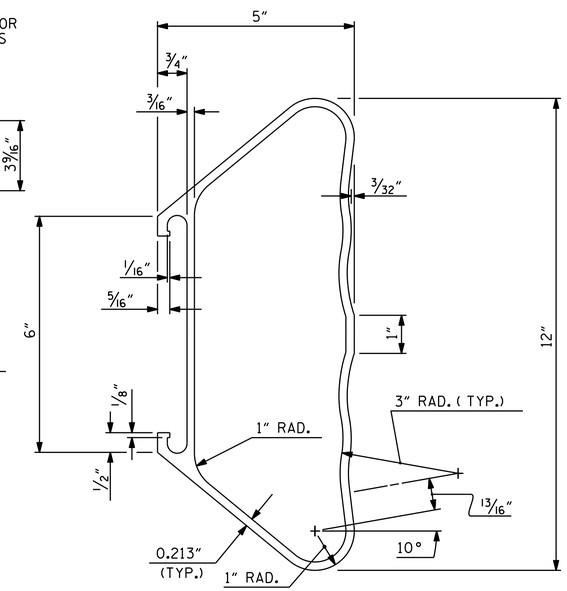

BOTTOM RAIL SECTION

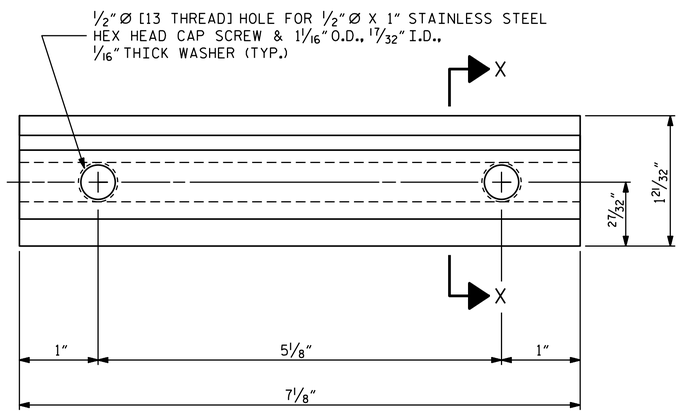

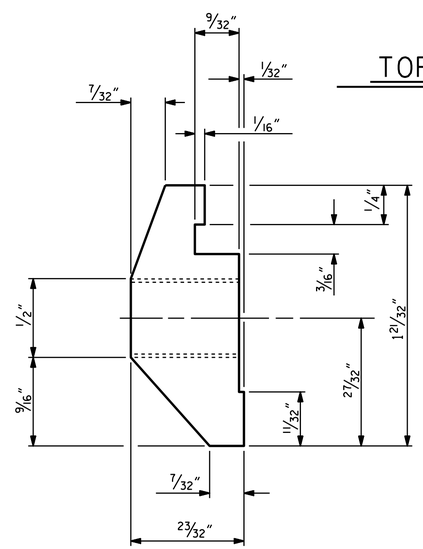

CLAMP BAR DETAIL

(6 REQUIRED PER POST)

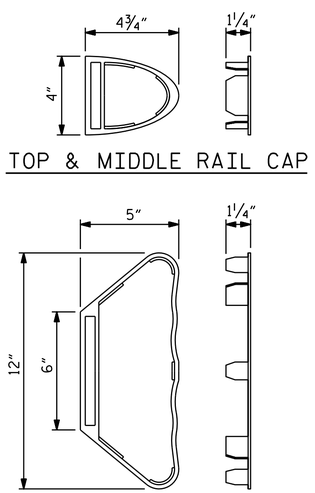

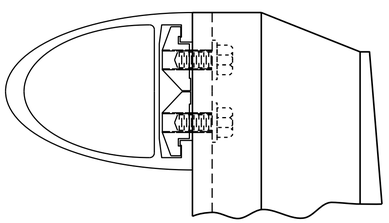

CLAMP ASSEMBLY

TOP RAIL SHOWN
(MIDDLE & BOTTOM RAIL ARE SIMILAR)

NORTH CAROLINA PROFESSIONAL SEAL 16301 ENGINEER HSIUNG FANG

DocuSigned by: Tung H. Fang
E72088400977435...
12/3/2014

PROJECT NO. U-3615B
GUILFORD COUNTY
STATION: 233+87.56 -L-

SHEET 2 OF 3

STATE OF NORTH CAROLINA
DEPARTMENT OF TRANSPORTATION
RALEIGH

STANDARD

3 BAR METAL RAIL

LEFT LANE

REVISIONS						SHEET NO.
NO.	BY:	DATE:	NO.	BY:	DATE:	S-58
1			3			TOTAL SHEETS
2			4			91

STR. #2

STD. NO. BMR6

ASSEMBLED BY : T. KIRSCHBAUM		DATE : 9/4/13	
CHECKED BY : T. H. FANG		DATE : 12/4/13	
DRAWN BY : JMB 1/88	REV. 5/7/03	RWW/JTE	
CHECKED BY : GGH 1/88	REV. 5/1/06	TLA/GM	
	REV. 10/1/11	MAA/GM	

03-DEC-2014 11:41
K:\TIPProjects-U\U3615b\Structures\Plans\Str2\Final plans\u3615b2_sd_sup.dgn
tfang