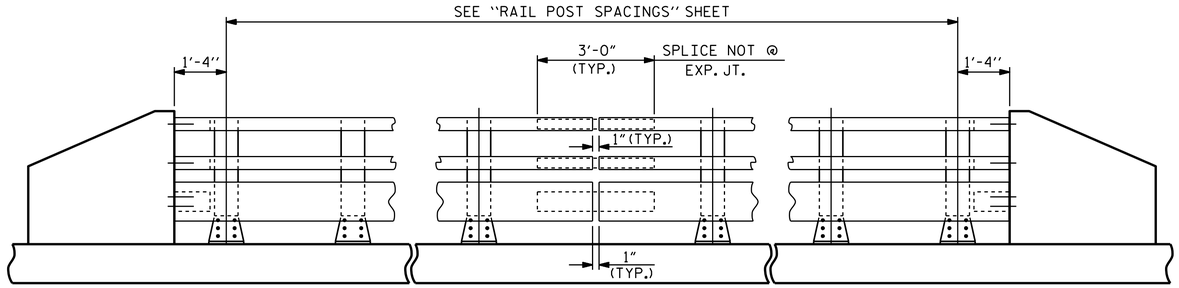

NOTE:
FOR ATTACHMENT OF METAL RAIL TO END POST, SEE STANDARD NO. BMR7 ON SHEET S-23.

ELEVATION

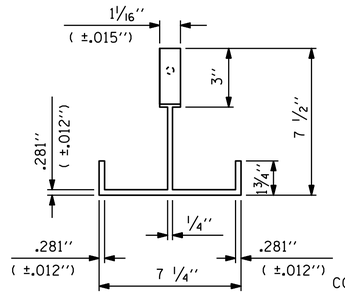

PLAN

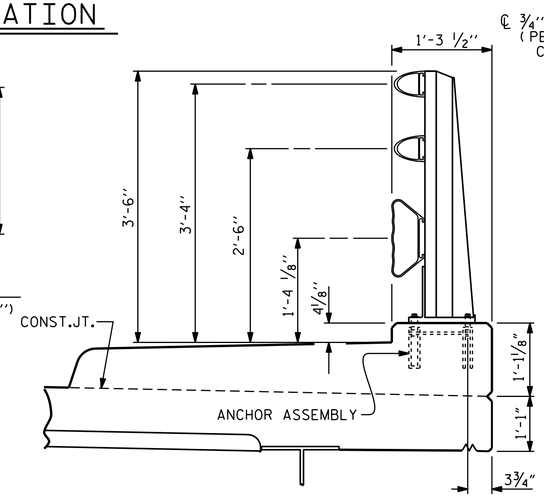

SECTION THRU RAIL

FOR ANCHOR ASSEMBLY, SEE "3 BAR METAL RAIL" STD. No. BMR6

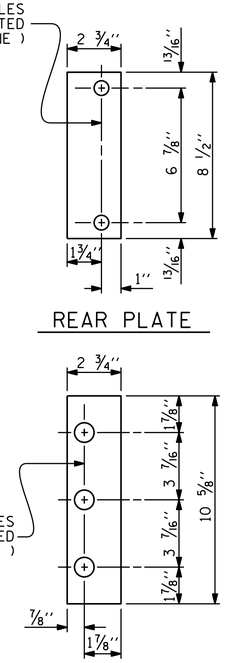

SHIM DETAILS

NOTE :
SHIMS MAY BE CUT ALONG PERMITTED CUTLINE OR SLOTTED TO EDGE OF PLATE TO FACILITATE PLACEMENT.

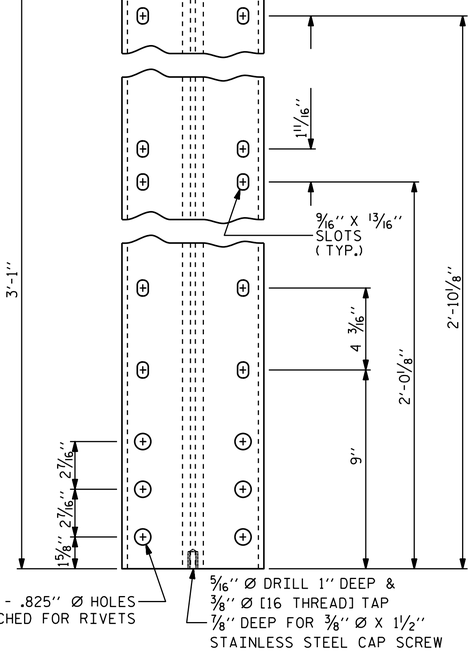

FRONT ELEVATION

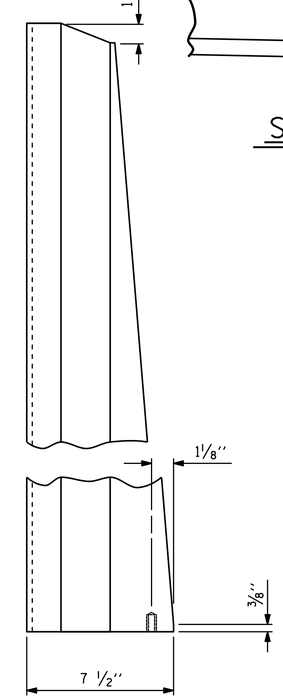

SIDE ELEVATION

DETAILS OF POST

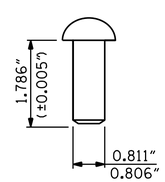

RIVET DETAIL

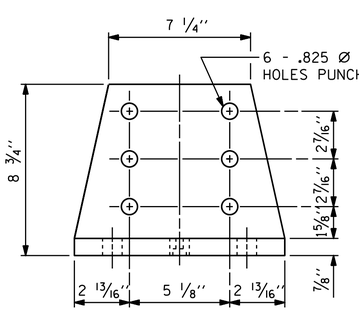

FRONT ELEVATION

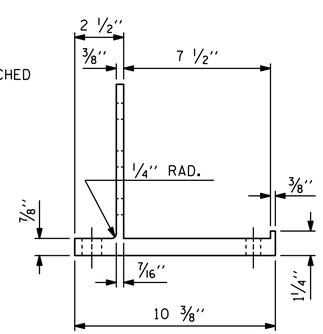

SIDE ELEVATION

POST BASE DETAILS

NOTES

AT THE CONTRACTOR'S OPTION, METAL RAIL MAY BE EITHER ALUMINUM OR GALVANIZED STEEL IN ACCORDANCE WITH THE REQUIREMENTS OF THE GENERAL NOTES AND THE FOLLOWING SPECIFICATIONS FOR THE ALTERNATE MATERIALS; HOWEVER, THE CONTRACTOR WILL BE REQUIRED TO USE THE SAME RAIL MATERIAL ON ALL STRUCTURES ON THE PROJECT FOR WHICH METAL RAIL IS DESIGNATED.

ALUMINUM RAILS

MATERIAL FOR POSTS, BASES AND RAILS, EXPANSION BARS AND CLAMP BARS SHALL BE ASTM B221 ALLOY 6061-T6.

MATERIAL FOR RIVETS SHALL BE ASTM B316 ALLOY 6061-T6. RIVETS SHALL BE STANDARD BUTTON HEAD AND CONE POINT COLD DRIVEN AS PER DRAWING.

THE BASE OF RAIL POSTS, OR ANY OTHER ALUMINUM SURFACE IN CONTACT WITH CONCRETE SHALL BE THOROUGHLY COATED WITH AN ALUMINUM IMPREGNATED CAULKING COMPOUND OF APPROVED QUALITY.

MATERIAL FOR SHIMS TO BE ASTM B209 ALLOY 6061-T6.

GALVANIZED STEEL RAILS

MATERIAL AND GALVANIZING ARE TO CONFORM TO THE FOLLOWING SPECIFICATIONS:

POST, POST BASES, RAILS, EXPANSION BARS AND CLAMP BARS : AASHTO M270 GRADE 36 STRUCTURAL STEEL - GALVANIZED TO AASHTO M111.

RIVETS: RIVETS SHALL MEET THE REQUIREMENTS OF ASTM A502 FOR GRADE 1 RIVETS.

THE CUT ENDS OF GALVANIZED STEEL RAILING, AFTER GRINDING SMOOTH SHALL BE GIVEN TWO COATS OF ZINC RICH PAINT MEETING THE REQUIREMENTS OF FEDERAL SPECIFICATION MIL-P-26915 USAF TYPE 1, OR OF FEDERAL SPECIFICATIONS TT-P-641.

SHIMS: SHIMS SHALL MEET THE REQUIREMENTS OF ASTM A570 FOR GRADE 33 OR A611 FOR GRADE C AND SHALL BE GALVANIZED IN ACCORDANCE WITH AASHTO M111.

RAIL CAPS: RAIL CAPS SHALL MEET THE REQUIREMENTS OF ASTM A570 FOR GRADE 33 OR A611 FOR GRADE C AND SHALL BE GALVANIZED IN ACCORDANCE WITH AASHTO M111.

GENERAL NOTES

RAILING SHALL BE CONTINUOUS FROM END POST TO END POST OF BRIDGE. EACH JOINT IN RAIL LENGTH SHALL BE SPLICED AS DETAILED. PANEL LENGTHS OF RAIL SHALL BE ATTACHED TO A MINIMUM OF THREE POSTS. PLACE ONE JOINT SPLICE JUST BEYOND THE 3RD RAIL POST FROM EACH END, TYPICALLY 14' FROM THE END. PLACE OTHER JOINTS AS NEEDED.

FOR END OF RAIL TO CLEAR FACE OF CONCRETE END POST DIMENSION, SEE SHEET S-24.

CAP SCREWS SHALL BE ASTM F593 ALLOY 305 STAINLESS STEEL. WASHERS FOR RAIL ATTACHMENT SHALL MEET THE REQUIREMENTS OF ASTM F844 EXCEPT THEY SHALL BE MADE FROM ALLOY 304 STAINLESS STEEL.

CERTIFIED MILL REPORTS ARE REQUIRED FOR RAILS AND POSTS. SHOP INSPECTION IS NOT REQUIRED.

METAL RAIL POSTS SHALL BE SET NORMAL TO CURB GRADE.

METHOD OF MEASUREMENT FOR METAL RAILS: FOR LENGTH OF METAL RAILS TO BE PAID FOR, SEE THE STANDARD SPECIFICATIONS.

CURVED RAIL USAGE: WHERE RAILS ARE TO BE USED ON BRIDGES ON HORIZONTAL AND/OR VERTICAL CURVATURE THE CONTRACTOR MAY, AT HIS OPTION, HAVE THE REQUIRED CURVATURE IN THE RAIL FORMED IN THE SHOP OR IN THE FIELD. IN EITHER EVENT, THE RAIL SHALL CONFORM WITHOUT BUCKLING OR KINKING TO THE REQUIRED CURVATURE IN A UNIFORM MANNER ACCEPTABLE TO THE ENGINEER.

TO INSURE FUTURE IDENTIFICATION OF THE FABRICATOR, A PERMANENT IDENTIFYING MARK SHALL BE PLACED ON EACH POST. THE METHOD OF MARKING AND LOCATION SHALL BE SUCH THAT IT DOES NOT DETRACT FROM THE APPEARANCE OF THE POST, BUT REMAIN VISIBLE AFTER RAIL PLACEMENT.

SHIMS SHALL BE USED AS NECESSARY FOR POST ALIGNMENT.

ALLOY 6351-T5 MAY BE SUBSTITUTED FOR ALLOY 6061-T6 WHERE APPLICABLE.

MINOR VARIATIONS IN DETAILS OF METAL RAIL WILL BE CONSIDERED. DETAILS OF SUCH VARIATIONS, IF DESIRED, SHALL BE SUBMITTED FOR APPROVAL.

PAY LENGTH = 401.667 LIN.FT.

METAL RAIL PAY LENGTH	
STAGE I	200'-10"
STAGE II	200'-10"
TOTAL	401'-8"

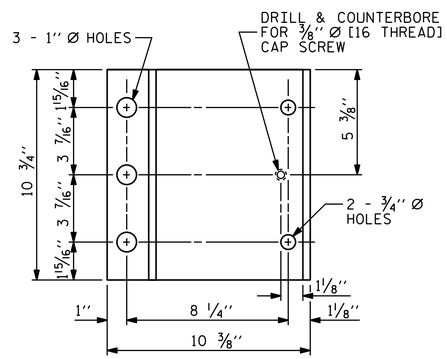

PLAN

PROJECT NO. U-3615B
GUILFORD COUNTY
STATION: 238+33.00 -L-

SHEET 1 OF 3

STATE OF NORTH CAROLINA
DEPARTMENT OF TRANSPORTATION
RALEIGH

STANDARD

3 BAR METAL RAIL

NORTH CAROLINA PROFESSIONAL SEAL 16301 ENGINEER TING HSILING FANG

DocuSigned by: Ting H. Fang
E72088400977435...
12/3/2014

REVISIONS							SHEET NO.
NO.	BY:	DATE:	NO.	BY:	DATE:		S-22
1			3				TOTAL SHEETS
2			4				91

STR. #1

STD. NO. BMR5

ASSEMBLED BY : OT NGUYEN		DATE : 6/10	
CHECKED BY : E.C. LOCKLER		DATE : 10/10	
DRAWN BY : JMB 1/88	REV. 5/7/03	RWW/JTE	
CHECKED BY : GGH 1/88	REV. 5/1/06	TLA/GM	
	REV. 10/1/11	MAA/GM	

03-DEC-2014 11:04
K:\TIPProjects-U\U3615b\Structures\Plans\str1\FinalPlans\u3615b_sd_3mr.dgn
tfang