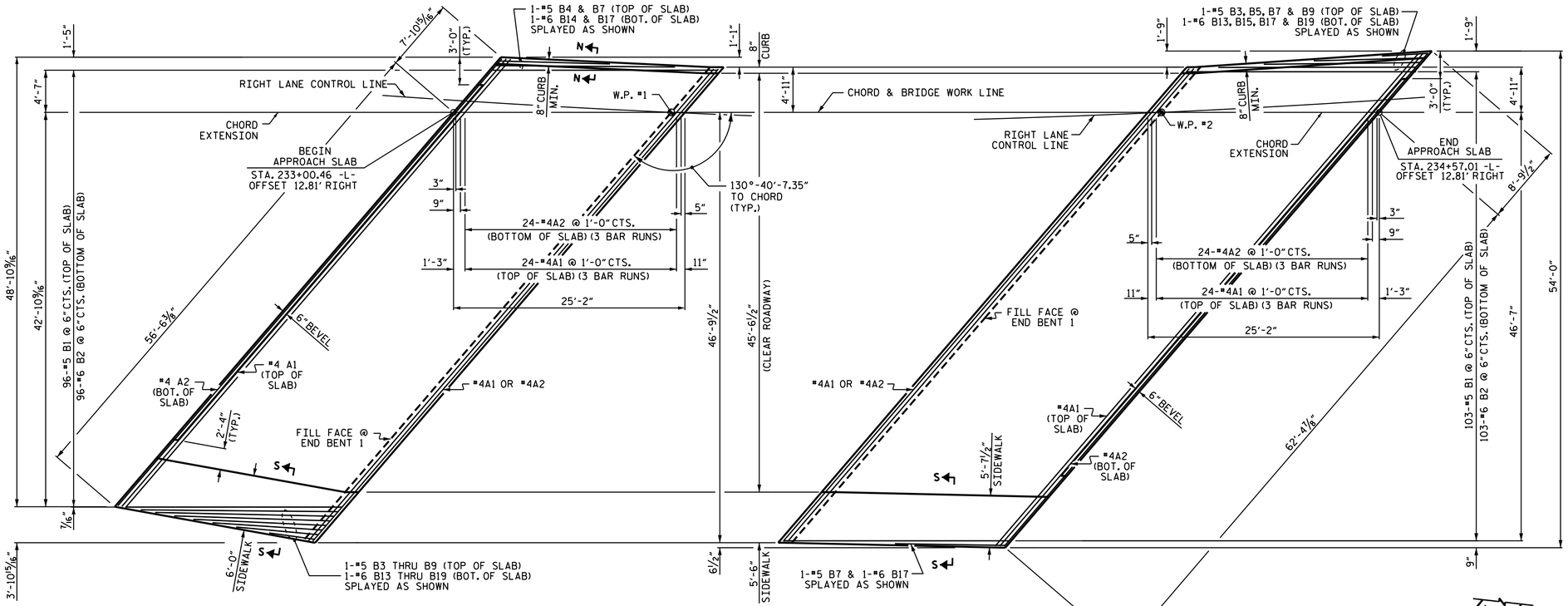

PLAN

DIMENSIONS SHOWN ARE TYPICAL FOR BOTH APPROACH SLABS
SIDEWALK DETAILS NOT SHOWN FOR CLARITY.

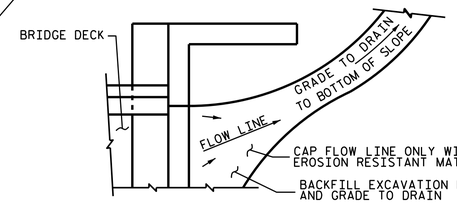

NOTE: IF THE APPROACH SLAB IS NOT CONSTRUCTED IMMEDIATELY AFTER THE BACKFILLING OF THE END BENT EXCAVATION, GRADE TO DRAIN TO THE BOTTOM OF THE SLOPE AND PROVIDE EROSION RESISTANT MATERIAL, SUCH AS FIBERGLASS ROVING OR AS DIRECTED BY THE ENGINEER TO PREVENT SOIL EROSION AND TO PROTECT THE AREA ADJACENT TO THE STRUCTURE. THE CONTRACTOR WILL BE REQUIRED TO REMOVE THESE MATERIALS PRIOR TO CONSTRUCTION OF THE APPROACH SLAB.

TEMPORARY DRAINAGE DETAIL

NORTH CAROLINA PROFESSIONAL SEAL 16301 ENGINEER TING HSIUNG FANG

DocuSigned by: Ting H. Fang
E72088400977435...
12/3/2014

BILL OF MATERIAL

APPROACH SLAB AT EB 1

BAR	NO.	SIZE	TYPE	LENGTH	WEIGHT
* A1	78	#4	STR	23'-11"	1246
A2	78	#4	STR	23'-9"	1237
* B1	96	#5	STR	24'-2"	2420
B2	96	#6	STR	24'-8"	3557
* B3	1	#5	STR	21'-6"	22
* B4	2	#5	STR	19'-6"	41
* B5	1	#5	STR	17'-0"	18
* B6	1	#5	STR	14'-6"	15
* B7	2	#5	STR	12'-0"	25
* B8	1	#5	STR	9'-0"	9
* B9	1	#5	STR	5'-0"	5
B13	1	#6	STR	21'-6"	32
B14	2	#6	STR	19'-6"	59
B15	1	#6	STR	17'-0"	26
B16	1	#6	STR	14'-6"	22
B17	2	#6	STR	12'-0"	36
B18	1	#6	STR	9'-0"	14
B19	1	#6	STR	5'-0"	8
REINFORCING STEEL				LBS.	4,991
* EPOXY COATED REINFORCING STEEL				LBS.	3,801
CLASS AA CONCRETE				C. Y.	55.1

APPROACH SLAB AT EB 2

BAR	NO.	SIZE	TYPE	LENGTH	WEIGHT
* A1	78	#4	STR	24'-11"	1298
A2	78	#4	STR	24'-9"	1290
* B1	103	#5	STR	24'-2"	2596
B2	103	#6	STR	24'-8"	3816
* B3	1	#5	STR	21'-6"	22
* B5	1	#5	STR	17'-0"	18
* B7	2	#5	STR	12'-0"	25
* B9	1	#5	STR	5'-0"	5
B13	1	#6	STR	21'-6"	32
B15	1	#6	STR	17'-0"	26
B17	2	#6	STR	12'-0"	36
B19	1	#6	STR	5'-0"	8
REINFORCING STEEL				LBS.	5,208
* EPOXY COATED REINFORCING STEEL				LBS.	3,964
CLASS AA CONCRETE				C. Y.	57.8

SPLICE CHART

BAR	SIZE	SPLICE
* A1	#4	2'-0"
A2	#4	1'-9"

NOTES

FOR REINFORCED BRIDGE APPROACH FILL INCLUDING GEOTEXTILE, IMPERMEABLE GEOMEMBRANE, 4" Ø DRAINAGE PIPE, #78M STONE, AND SELECT MATERIAL, SEE ROADWAY PLANS

AREA BETWEEN THE WINGWALL AND APPROACH SLAB SHALL BE GRADED TO DRAIN THE WATER AWAY FROM THE FILL FACE OF THE BRIDGE AND SHALL BE PAVED. SEE ROADWAY PLANS

APPROACH SLAB GROOVING IS NOT REQUIRED.

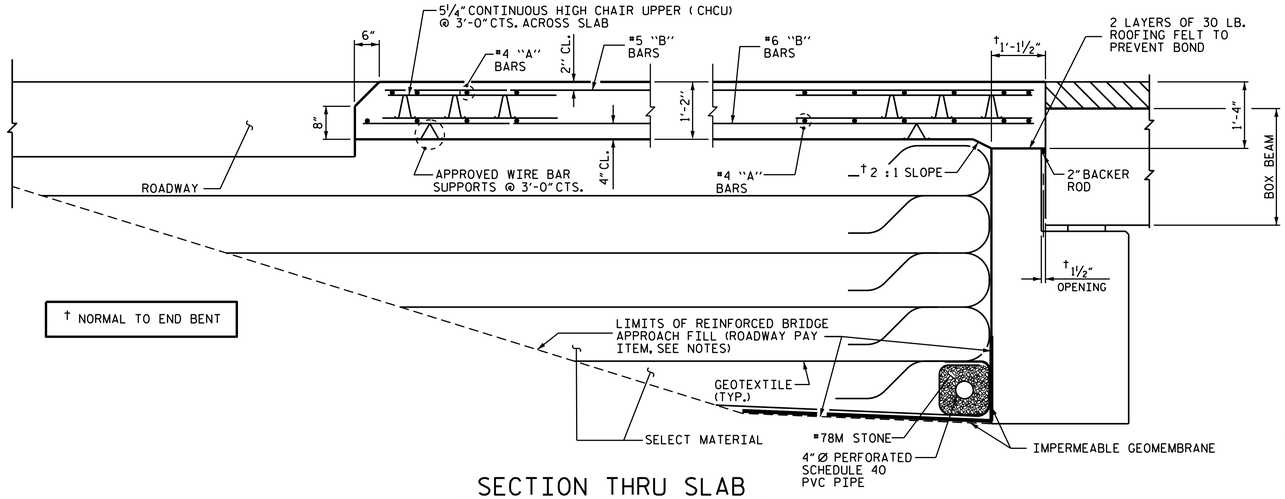

SECTION THRU SLAB

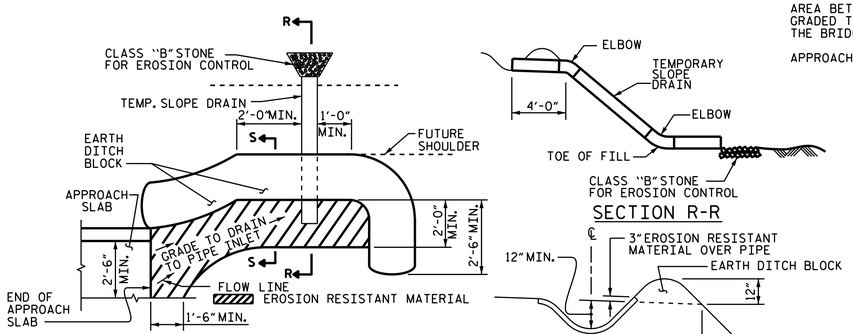

PLAN VIEW

SECTION R-R

SECTION S-S

TEMPORARY BERM AND SLOPE DRAIN DETAILS

(TO BE USED WHEN SHOULDER BERM GUTTER IS REQUIRED)

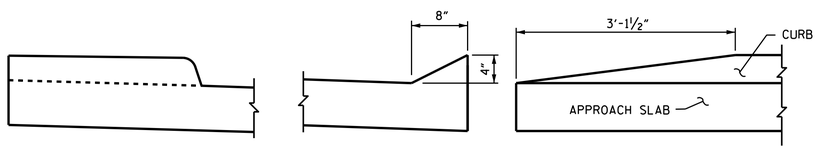

SECTION S-S

SECTION N-N

END OF CURB WITHOUT SHOULDER BERM GUTTER

CURB DETAILS

PROJECT NO. U-3615B
GUILFORD COUNTY
STATION: 233+87.56 -L-

STATE OF NORTH CAROLINA
DEPARTMENT OF TRANSPORTATION
RALEIGH

STANDARD
BRIDGE APPROACH SLAB
FOR PRESTRESSED CONCRETE
CORED SLAB UNIT
(SUB-REGIONAL TIER)
RIGHT LANE

ASSEMBLED BY : T. KIRSCHBAUM	DATE : 10-9-13
CHECKED BY : R. P. PATEL	DATE : 12-31-13
DESIGN ENGINEER OF RECORD: T. H. FANG	DATE : 1-7-14
DRAWN BY : SHS/MAA 5-09	REV. 12-11 MAA/AAC
CHECKED BY : BCH 5-09	

REVISIONS							SHEET NO.
NO.	BY:	DATE:	NO.	BY:	DATE:		S-91
1			3				TOTAL SHEETS
2			4				91

03-DEC-2014 12:07
K:\TIPProjects-U\U3615b\Structures\Plans\Str3\Final plans\u3615b3_sd_as.dgn
ttfang

STR. #3

STD. NO. BAS_30_90S