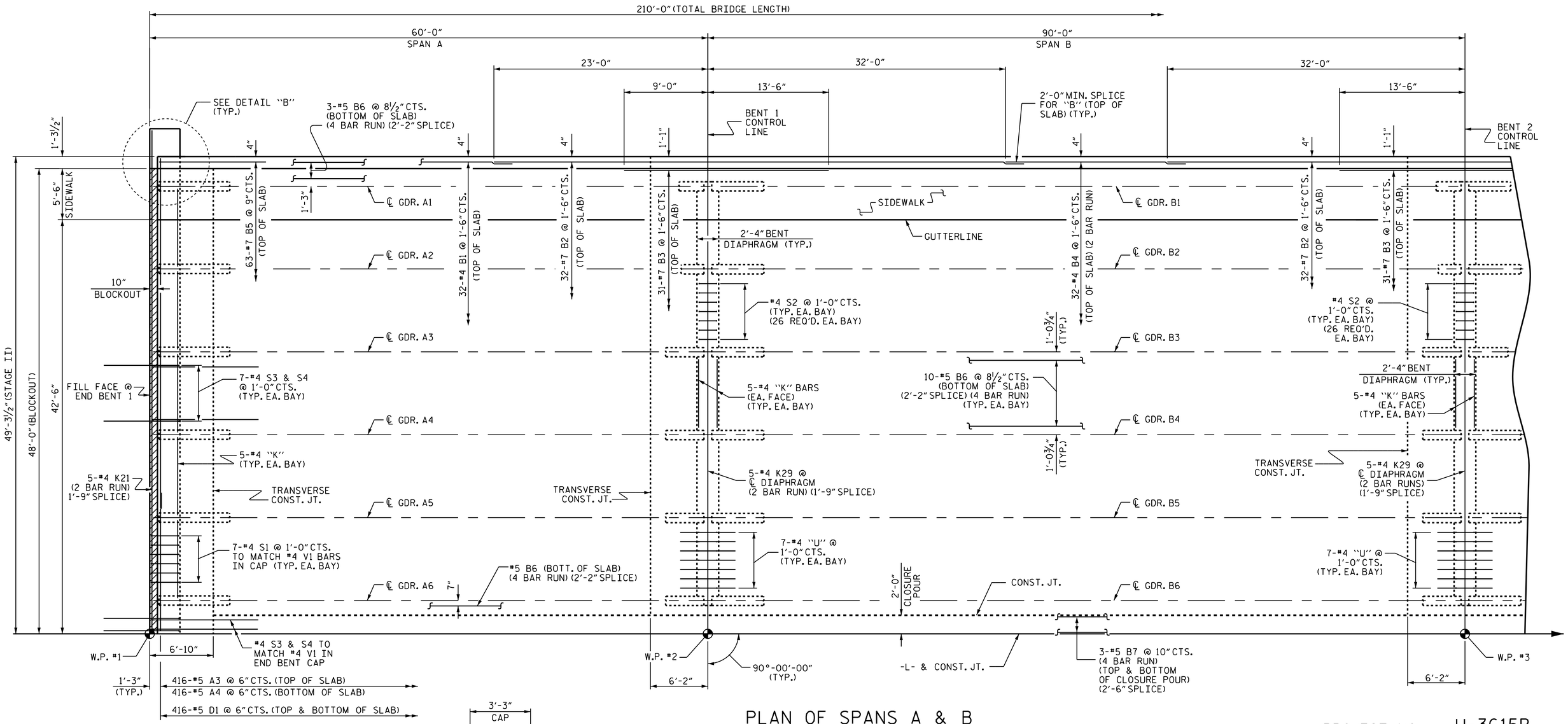

PLAN OF SPANS A & B

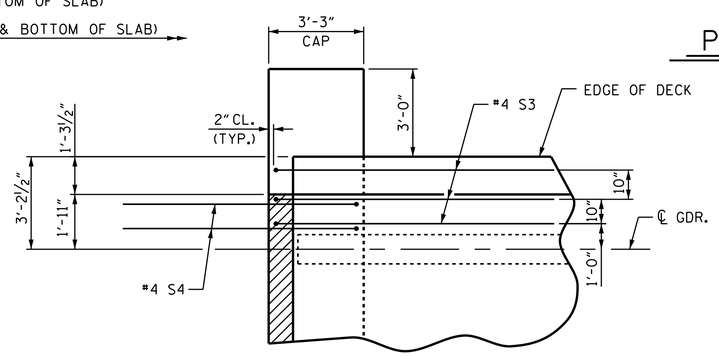

DETAIL "B"

S1 BARS NOT SHOWN FOR CLARITY.
FOR INTEGRAL ABUTMENT DETAILS,
SEE DETAIL "C" ON SHEET 4 OF 5.
END BENT 1 SHOWN, END BENT 2 SIMILAR

PROJECT NO. U-3615B
GUILFORD COUNTY
STATION: 238+33.00 -L-

SHEET 3 OF 5

STATE OF NORTH CAROLINA
DEPARTMENT OF TRANSPORTATION
RALEIGH

SUPERSTRUCTURE

PLAN OF SPAN
SPANS A & B

STAGE II

NORTH CAROLINA PROFESSIONAL SEAL 16301 ENGINEER TING HSIUNG FANG

DocuSigned by: Ting H. Fang
E72088400977435...
12/3/2014

REVISIONS							
NO.	BY:	DATE:	NO.	BY:	DATE:	SHEET NO.	S-11
1			3			TOTAL SHEETS	91
2			4				

DRAWN BY : QT NGUYEN DATE : 6/10
CHECKED BY : E.C. LOCKLER DATE : 10/10
DESIGN ENGINEER OF RECORD: E.I. OMILE DATE : 1-7-14

03-DEC-2014 11:04
K:\TIPProjects-U\U3615b\Structures\Plans\str1\FinalPlans\u3615b_sd_s*.dgn
ttfang

STR. #1