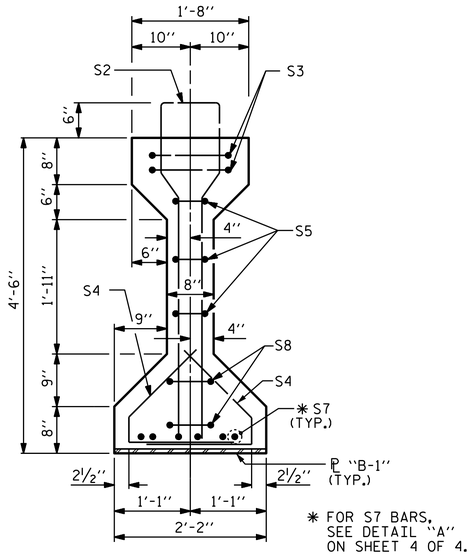

SECTION B-B

(FOR EMBEDED ℄ "B-1" DETAILS, SEE SHEET 4 OF 4)

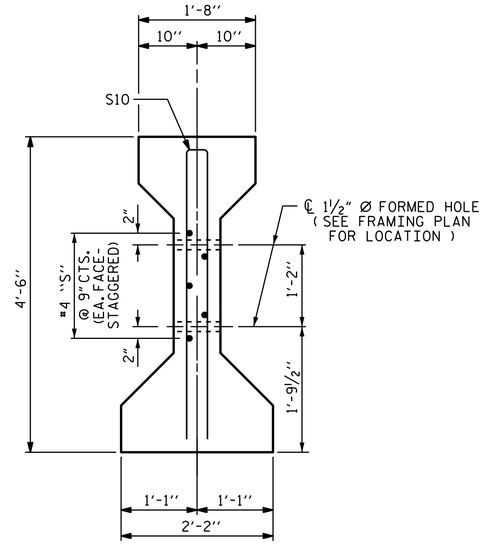

SECTION C-C

(S1 BARS NOT SHOWN)

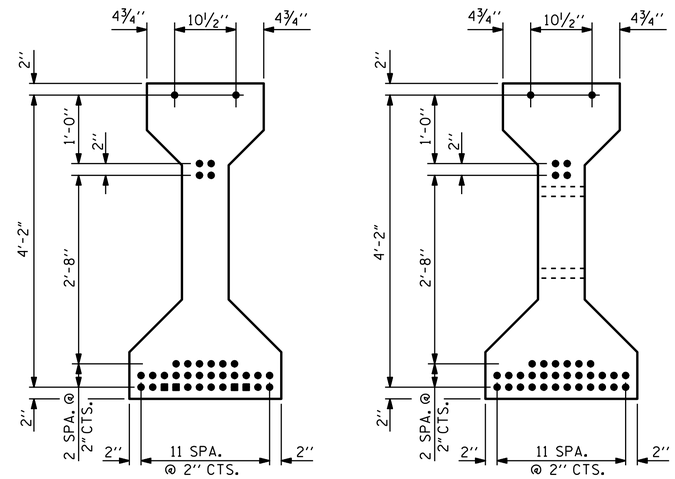

AT END OF GIRDER | AT ℄ OF GIRDER

0.6" Ø LOW RELAXATION STRAND LAYOUT

■ STRANDS DEBONDED FOR 8'-0" FROM END OF GIRDER. (36 STRANDS, ALL STRAIGHT, 4 DEBONDED)

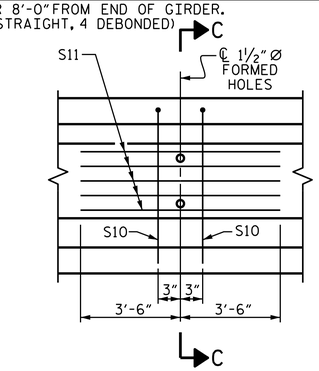

PARTIAL ELEVATION

SHOWING INTERMEDIATE DIAPHRAGM REINFORCING STEEL FOR ALL GIRDERS

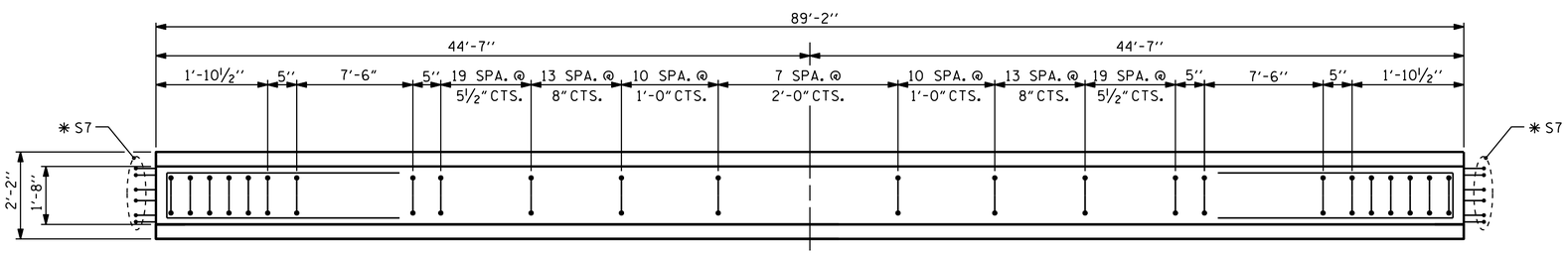

PLAN OF GIRDER

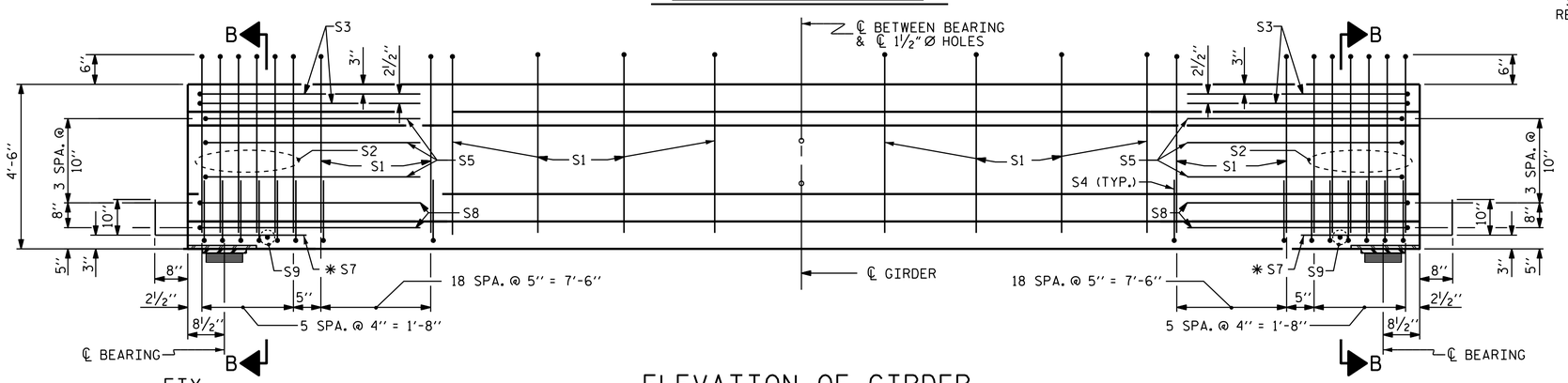

ELEVATION OF GIRDER

(SEE PARTIAL ELEVATION FOR ADDITIONAL "S" BARS IN THE INTERMEDIATE DIAPHRAGM AREA)

0.6" Ø L. R. GRADE 270 STRANDS

AREA (SQUARE INCHES)	ULTIMATE STRENGTH (LBS. PER STRAND)	APPLIED PRESTRESS (LBS. PER STRAND)
0.217	58,600	43,950

REINFORCING STEEL FOR ONE GIRDER

BAR	NUMBER	SIZE	TYPE	LENGTH	WEIGHT
S1	130	#4	1	10'-8"	926
S2	12	#6	1	10'-8"	192
S3	4	#4	2	9'-1"	24
S4	100	#4	3	3'-5"	228
S5	6	#4	2	8'-5"	34
✱ S7	12	#5	STR	3'-8"	46
S8	4	#4	2	8'-7"	23
S9	2	#3	STR	1'-10"	1
S10	2	#5	2	8'-8"	18
S11	5	#4	STR	7'-0"	23

✱ S7 BARS SHALL BE BENT BEFORE SHIPMENT. HEAT BENDING SHALL NOT BE ALLOWED.

BAR TYPES

ALL BAR DIMENSIONS ARE OUT-TO-OUT

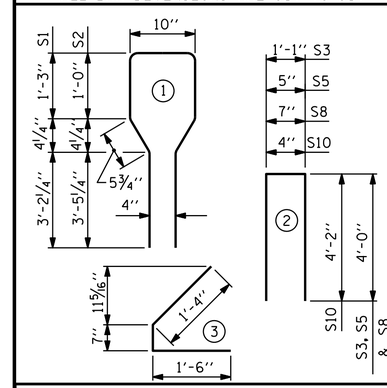

QUANTITIES FOR ONE GIRDER

	REINFORCING STEEL	8500 PSI CONCRETE	0.6" Ø L.R. STRANDS
	LB.	C.Y.	No.
	1,515	18.095	36

GIRDERS REQUIRED

	NUMBER	LENGTH	TOTAL LENGTH
STAGE I	6	89.17	535.00
STAGE II	6	89.17	535.00
TOTAL	12	—	1,070.00

PROJECT NO. U-3615B

GUILFORD COUNTY

STATION: 238+33.00 -L-

SHEET 2 OF 4

STATE OF NORTH CAROLINA
DEPARTMENT OF TRANSPORTATION
RALEIGH

STANDARD

AASHTO TYPE IV
PRESTRESSED CONCRETE GIRDER
CONTINUOUS FOR LIVE LOAD
SPAN B

NORTH CAROLINA PROFESSIONAL SEAL 16301 ENGINEER TING HSILING FANG

DocuSigned by: Ting H. Fang
E72088400977435...

12/3/2014

ASSEMBLED BY : OT NGUYEN	DATE : 6-10
CHECKED BY : E.C. LOCKLEAR	DATE : 10-10
DESIGN ENGINEER OF RECORD : E.I. OMILE	DATE : 1-14

DRAWN BY : ELR 8/91	REV. 10/17/00R RWW/LES
CHECKED BY : GRP 8/91	REV. 5/1/06R TLA/GM
	REV. 10/1/11 MAA/GM

REVISIONS

NO.	BY:	DATE:	NO.	BY:	DATE:
1			3		
2			4		

SHEET NO. S-18

TOTAL SHEETS 91

STR. #1

STD. NO. PCG6

03-DEC-2014 11:04
K:\TIPProjects-U\U3615b\Structures\Plans\str1\FinalPlans\U3615B_SD_G*.dgn
tfang