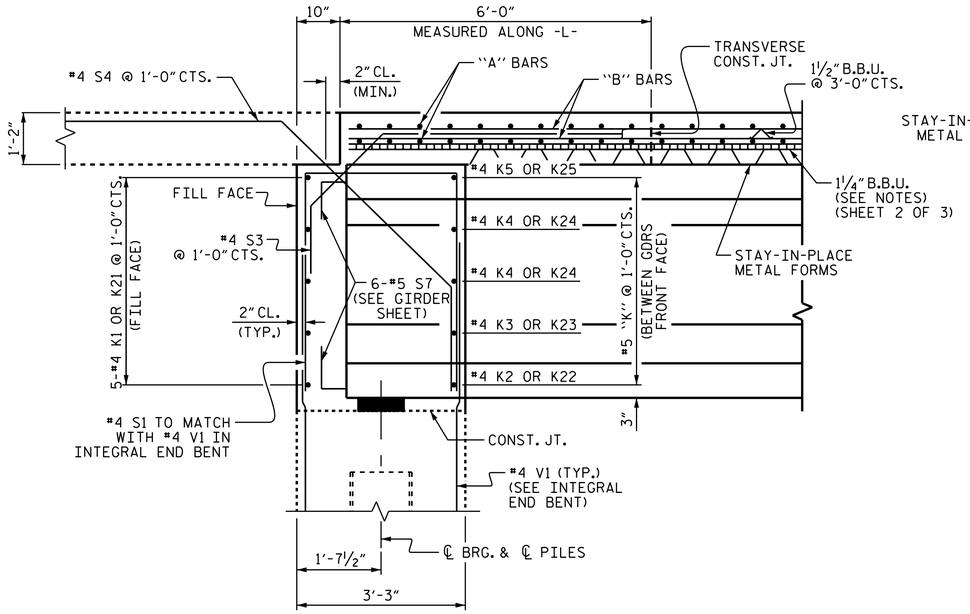

SECTION THRU INTEGRAL END BENT

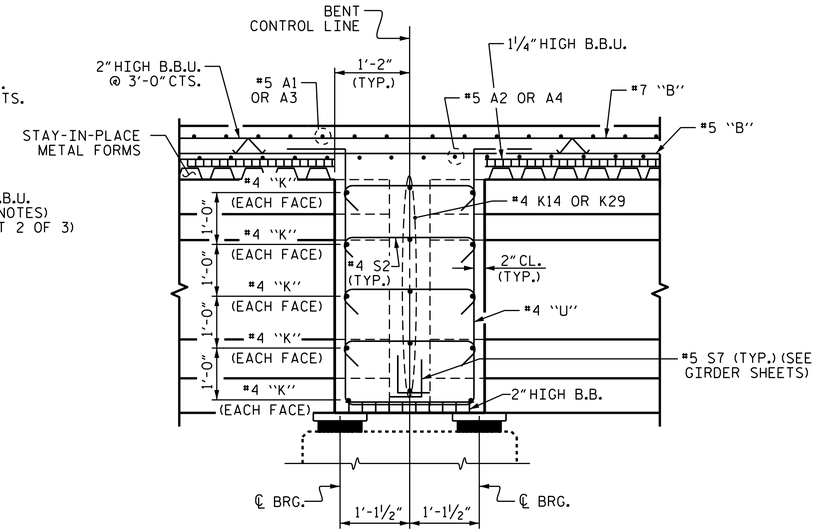

SECTION THRU BENT

NO BENT DIAPHRAGM REQUIRED IN THE CLOSURE-POUR BAY.

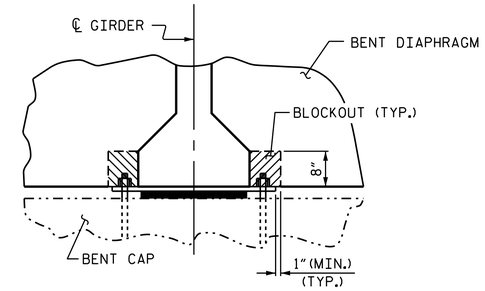

SECTION A-A

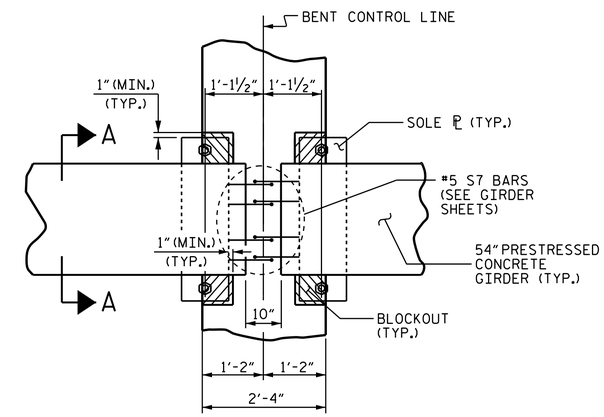

PLAN

BENT DIAPHRAGM BLOCK-OUT DETAIL

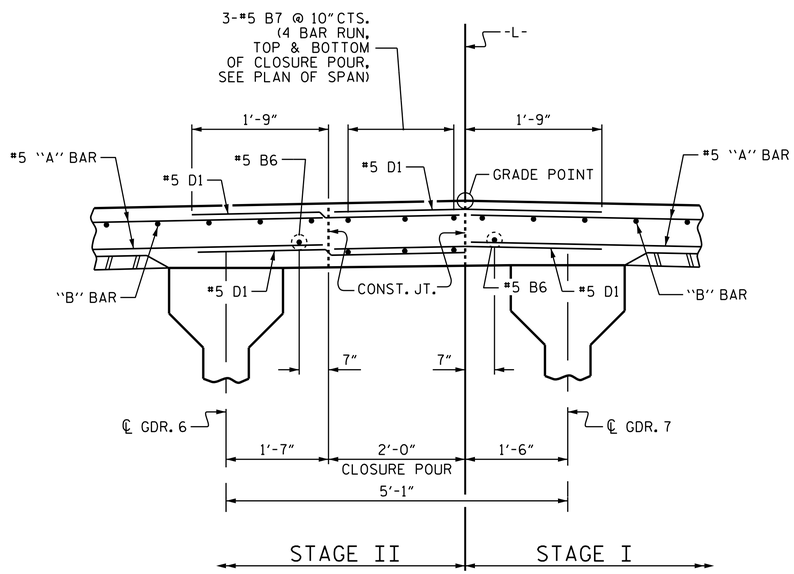

DECK CLOSURE POUR DETAIL

#5 D1 DOWELS SHALL BE PLACED IN THE SAME HORIZONTAL PLANE AS TOP & BOTTOM SLAB REINFORCING STEELS.

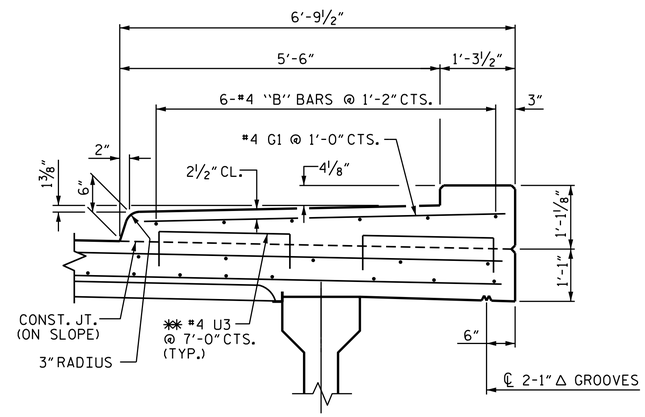

SECTION THRU SIDEWALK

✱✱ THE #4 U3 BARS MAY BE PUSHED INTO GREEN CONCRETE AFTER DECK HAS BEEN SCREEDED OFF.

PROJECT NO. U-3615B
GUILFORD COUNTY
STATION: 238+33.00 -L-

SHEET 3 OF 3

NORTH CAROLINA PROFESSIONAL SEAL 16301 ENGINEER TING HSIUNG FANG

DocuSigned by: Ting H. Fang
E72088409977435...
12/3/2014

STATE OF NORTH CAROLINA
DEPARTMENT OF TRANSPORTATION
RALEIGH

SUPERSTRUCTURE

TYPICAL SECTION DETAILS

REVISIONS							SHEET NO.
NO.	BY:	DATE:	NO.	BY:	DATE:		S-8
1			3				TOTAL SHEETS
2			4				91

DRAWN BY : OT NGUYEN DATE : 6-10
CHECKED BY : E.C. LOCKLEAR DATE : 10-10
DESIGN ENGINEER OF RECORD: E.I. OMILE DATE : 1-14

03-DEC-2014 11:03
K:\TIPProjects-U\U3615b\Structures\Plans\str1\FinalPlans\u3615b_sd_ts.dgn
ttfang

STR. #1