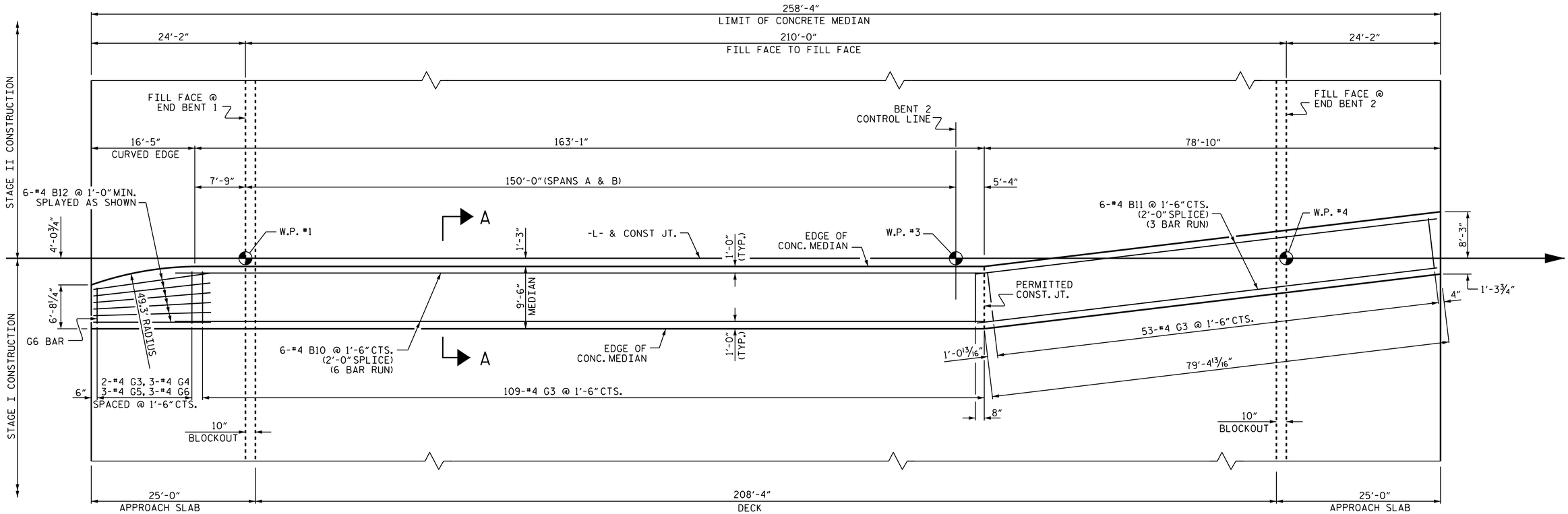

PLAN

THE CONCRETE MEDIAN ON A CONTINUOUS UNIT SHALL NOT BE CAST UNTIL ALL CONCRETE IN THE UNIT HAS BEEN CAST AND HAS REACHED A MINIMUM COMPRESSIVE STRENGTH OF 3,000 PSI.

THE CONCRETE MEDIAN ON THE BRIDGE EXTENDING TO THE END OF THE APPROACH SLABS IS INCLUDED IN THE SUPERSTRUCTURE BILL OF MATERIAL AND PAID FOR AS PART OF THE REINFORCED CONCRETE DECK PAY ITEM. FOR QUANTITIES OF CONCRETE MEDIAN, SEE "BILL OF MATERIAL" TABLE ON SHEET S-28.

ALL REINFORCING STEEL IN THE CONCRETE MEDIAN SHALL BE EPOXY COATED.

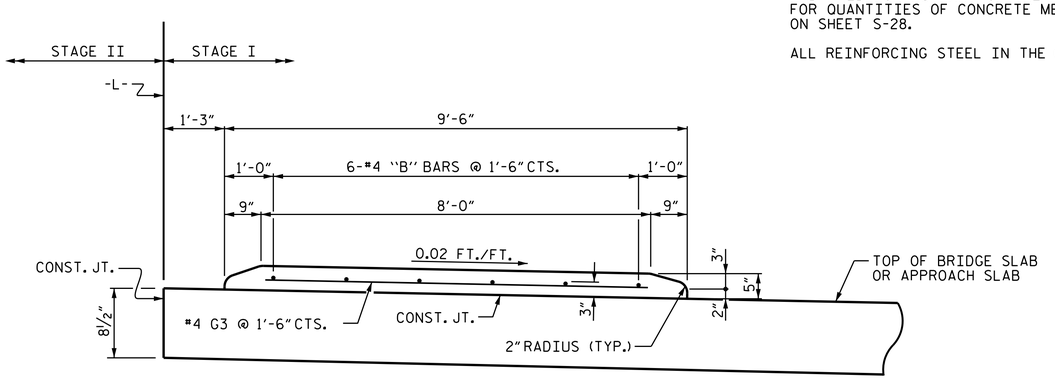

SECTION A-A

PROJECT NO. U-3615B
GUILFORD COUNTY
STATION: 238+33.00 -L-

STATE OF NORTH CAROLINA
DEPARTMENT OF TRANSPORTATION
RALEIGH

SUPERSTRUCTURE

CONCRETE MEDIAN

NORTH CAROLINA PROFESSIONAL SEAL 16301 ENGINEER TING HSIUNG FANG

DocuSigned by: Ting H. Fang
E72088400977435...
12/3/2014

REVISIONS						SHEET NO.
NO.	BY:	DATE:	NO.	BY:	DATE:	S-14
1			3			TOTAL SHEETS
2			4			91

DRAWN BY : T. H. FANG DATE : 10-26-12
CHECKED BY : T. J. KIRSCHBAUM DATE : 6-20-2013
DESIGN ENGINEER OF RECORD: T. H. FANG DATE : 12-31-13

03-DEC-2014 11:04
K:\TIPProjects-U\U3615b\Structures\Plans\str1\FinalPlans\u3615b_sd_md.dgn
ttfang

STR. #1