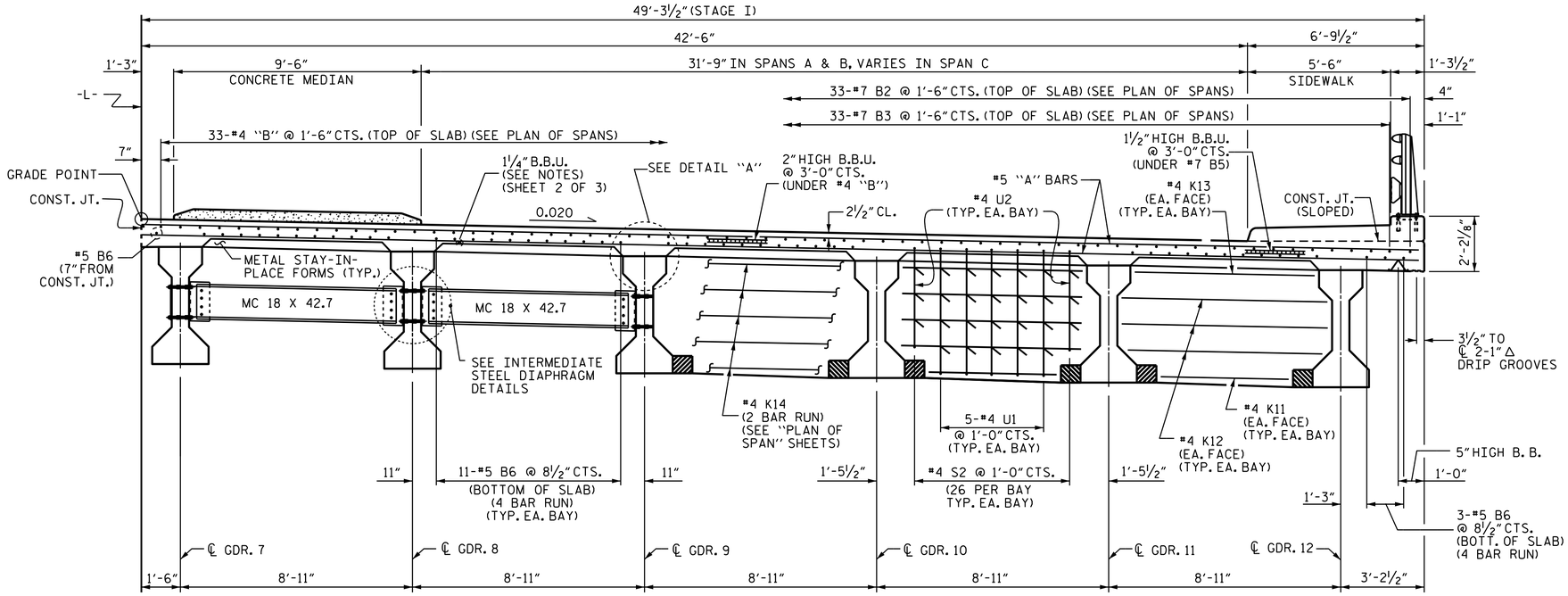

PARTIAL TYPICAL SECTION
(SHOWING INTERMEDIATE DIAPHRAGMS)

PARTIAL TYPICAL SECTION
(SHOWING BENT DIAPHRAGMS)

TYPICAL SECTION - STAGE I

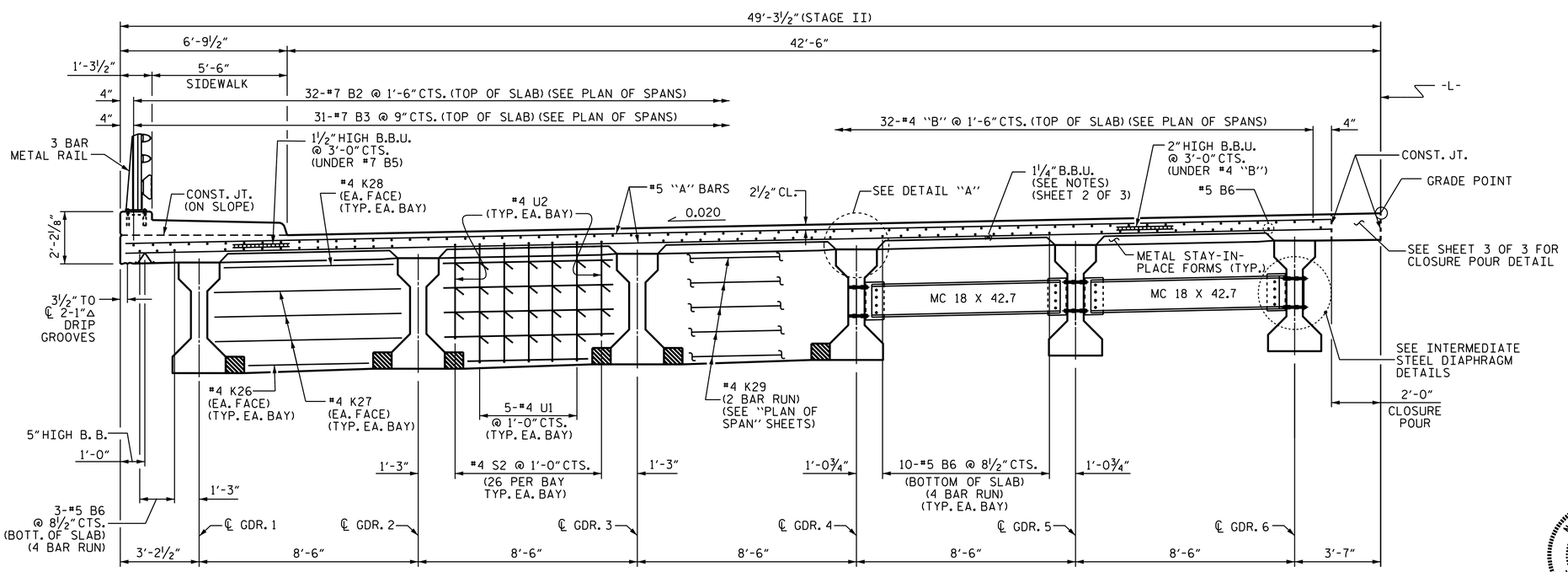

PARTIAL TYPICAL SECTION
(SHOWING BENT DIAPHRAGMS)

PARTIAL TYPICAL SECTION
(SHOWING INTERMEDIATE DIAPHRAGM)

TYPICAL SECTION - STAGE II

NOTES

PROVIDE 1¼" HIGH BEAM BOLSTERS UPPER AT 4'-0" CTS. ATOP THE METAL STAY-IN-PLACE FORMS TO SUPPORT THE BOTTOM MAT OF "A" BARS. WHEN USING REMOVABLE FORMS, PROVIDE CONTINUOUS HIGH CHAIRS FOR METAL DECK (C.H.C.M.) @ 4'-0" CTS. WITH A HEIGHT TO SUPPORT THE BOTTOM MAT OF "A" BARS A CLEAR DISTANCE OF 2½" ABOVE THE TOP OF THE REMOVABLE FORM.

LONGITUDINAL STEEL MAY BE SHIFTED SLIGHTLY, AS NECESSARY, TO AVOID INTERFERENCE WITH STIRRUPS IN PRESTRESSED CONCRETE GIRDERS.

PREVIOUSLY CAST CONCRETE IN A CONTINUOUS UNIT SHALL HAVE ATTAINED A MINIMUM COMPRESSIVE STRENGTH OF 3,000 PSI BEFORE ADDITIONAL CONCRETE IS CAST IN THE UNIT.

FOR WING ELEVATIONS AND DETAILS, SEE "PLAN OF SPANS DETAILS" SHEETS.

FOR SECTION THRU SIDEWALK AND DETAILS, SEE SHEET 3 OF 3.

FOR 5" MONOLITHIC CONCRETE MEDIAN REINFORCING STEEL AND DETAILS, SEE "CONCRETE MEDIAN" SHEET.

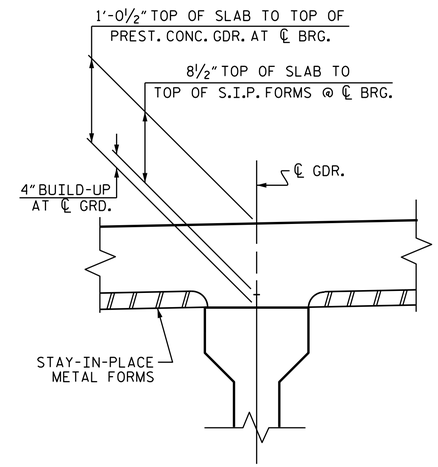

DETAIL "A"

PROJECT NO. U-3615B
GUILFORD COUNTY
STATION: 238+33.00 -L-

SHEET 2 OF 3

STATE OF NORTH CAROLINA
DEPARTMENT OF TRANSPORTATION
RALEIGH

SUPERSTRUCTURE

TYPICAL SECTION

NORTH CAROLINA PROFESSIONAL SEAL 16301 ENGINEER TING HSIUNG FANG

DocuSigned by: Ting H. Fang
E72088A00977435...
12/3/2014

REVISIONS						
NO.	BY:	DATE:	NO.	BY:	DATE:	
1			3			
2			4			

SHEET NO. S-7
TOTAL SHEETS 91

STR. #1

DRAWN BY : QT NGUYEN DATE : 6-10
CHECKED BY : E.C. LOCKLEAR DATE : 10-10
DESIGN ENGINEER OF RECORD: E.I. OMILE DATE : 1-14

03-DEC-2014 11:03
K:\TIPProjects-U\U3615b\Structures\Plans\str1\FinalPlans\u3615b_sd_ts.dgn
ttfang