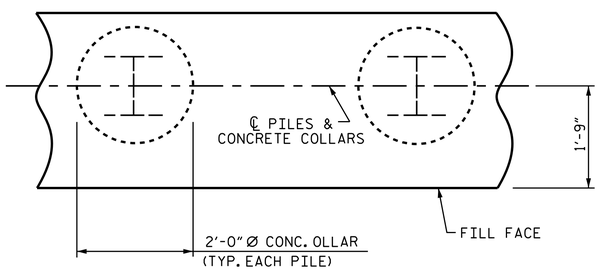

PLAN

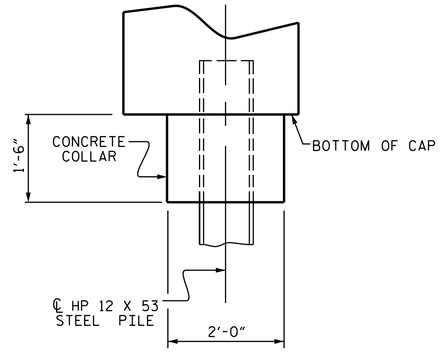

ELEVATION

CORROSION PROTECTION FOR STEEL PILES DETAIL

END BENT 1 SHOWN, END BENT 2 SIMILAR BY ROTATION

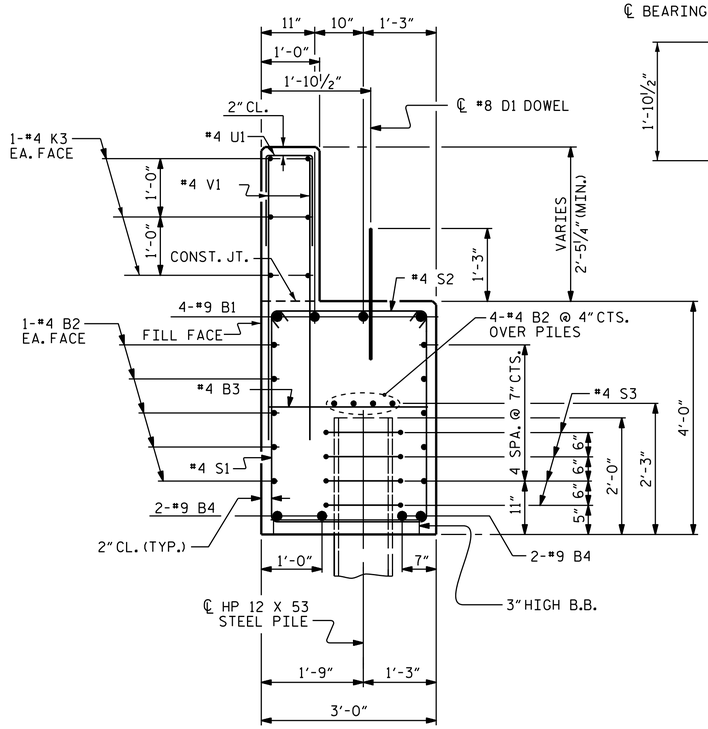

SECTION A-A

(CONCRETE COLLAR NOT SHOWN FOR CLARITY.
SEE "CORROSION PROTECTION FOR STEEL PILES DETAIL.")

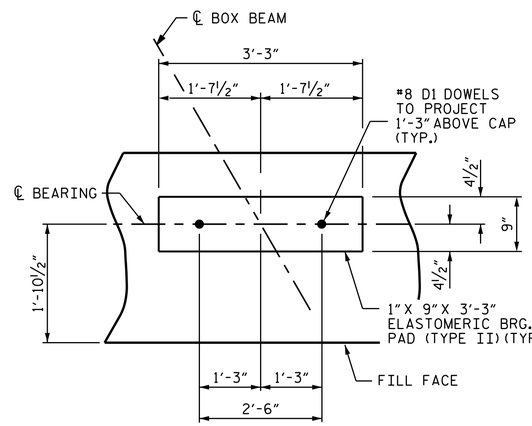

DETAIL "A"

END BENT 1 SHOWN, END BENT 2
SIMILAR BY ROTATION

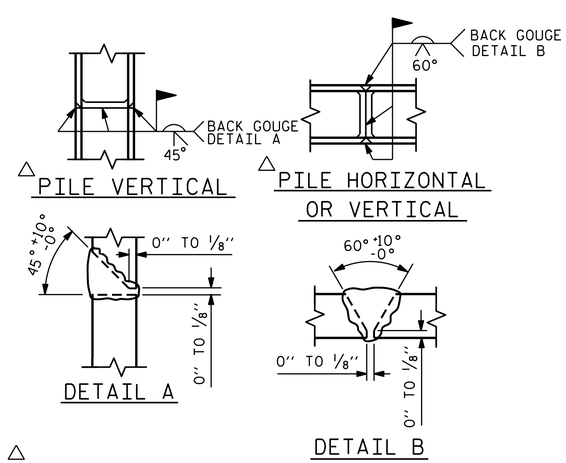

△ POSITION OF PILE DURING WELDING.

PILE SPLICE DETAILS

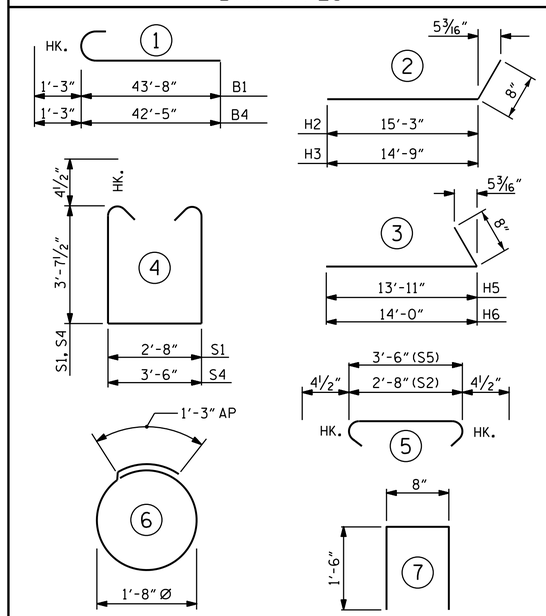

ALL BAR DIMENSIONS ARE OUT TO OUT.

END BENT 1		END BENT 2	
HP 12 X 53 STEEL PILES		HP 12 X 53 STEEL PILES	
NO: 13	LIN. FT. = 325	NO: 13	LIN. FT. = 390
PILE EXCAVATION		PILE EXCAVATION	
IN SOIL	LIN. FT. = 229	IN SOIL	LIN. FT. = 314
NOT IN SOIL	LIN. FT. = 40	NOT IN SOIL	LIN. FT. = 47

BILL OF MATERIAL — END BENT 1

BAR	NO.	SIZE	TYPE	LENGTH	WEIGHT
B1	8	#9	1	44'-11"	1222
B2	42	#4	STR	27'-10"	781
B3	20	#4	STR	2'-8"	36
B4	8	#9	1	43'-8"	1188
D1	36	#8	STR	2'-3"	216
H1	14	#4	STR	4'-10"	45
H2	16	#6	2	15'-11"	383
H3	16	#6	2	15'-5"	370
K1	3	#4	STR	7'-6"	15
K2	3	#4	STR	6'-10"	14
K3	18	#4	STR	28'-11"	348
K4	6	#4	STR	5'-2"	21
S1	74	#4	4	10'-8"	527
S2	74	#4	5	3'-5"	169
S3	52	#4	6	6'-6"	226
S4	2	#4	4	11'-6"	15
S5	2	#4	5	4'-3"	6
U1	68	#4	7	3'-8"	167
V1	136	#4	STR	6'-2"	560
V2	17	#4	STR	7'-10"	89
V3	43	#4	STR	7'-9"	223

REINFORCING STEEL 6621 LBS.

CLASS A CONCRETE BREAKDOWN
(FOR ONE END BENT No. 1)

POUR #1	CAP, LOWER PART OF WINGS & COLLARS	39.8 C.Y.
POUR #2	BACKWALL & UPPER PART OF WINGS	7.6 C.Y.
TOTAL CLASS A CONCRETE		47.4 C.Y.

BILL OF MATERIAL — END BENT 2

BAR	NO.	SIZE	TYPE	LENGTH	WEIGHT
B1	8	#9	1	44'-11"	1222
B2	42	#4	STR	27'-10"	781
B3	20	#4	STR	2'-8"	36
B4	8	#9	1	43'-8"	1188
D1	36	#8	STR	2'-3"	216
H4	14	#4	STR	12'-5"	116
H5	16	#6	3	14'-7"	350
H6	16	#6	3	14'-8"	352
K5	3	#4	STR	14'-6"	29
K6	3	#4	STR	15'-0"	30
K7	3	#4	STR	5'-0"	10
K8	3	#4	STR	5'-2"	10
K9	24	#4	STR	24'-0"	385
S1	98	#4	4	10'-8"	698
S2	98	#4	5	3'-5"	224
S3	52	#4	6	6'-6"	226
S4	2	#4	4	11'-6"	15
S5	2	#4	5	4'-3"	6
U1	68	#4	7	3'-8"	167
V1	136	#4	STR	6'-2"	560
V2	32	#4	STR	8'-0"	171
V3	41	#4	STR	7'-9"	212

REINFORCING STEEL 7005 LBS.

CLASS A CONCRETE BREAKDOWN
(FOR ONE END BENT No. 2)

POUR #1	CAP, LOWER PART OF WINGS & COLLARS	40.9 C.Y.
POUR #2	BACKWALL & UPPER PART OF WINGS	8.9 C.Y.
TOTAL CLASS A CONCRETE		49.8 C.Y.

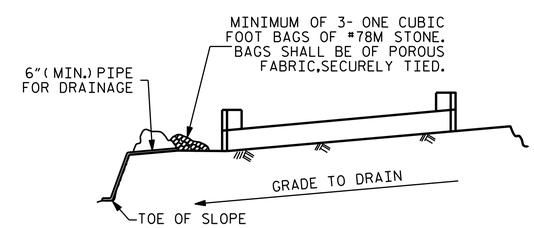

BAGGED STONE AND PIPE SHALL BE PLACED IMMEDIATELY AFTER COMPLETION OF END BENT EXCAVATION. PIPE MAY BE EITHER CONCRETE, CORRUGATED STEEL, CORRUGATED ALUMINUM ALLOY, OR CORRUGATED PLASTIC. PERFORATED PIPE WILL NOT BE ALLOWED.

BAGGED STONE SHALL REMAIN IN PLACE UNTIL THE ENGINEER DIRECTS THAT IT BE REMOVED. THE CONTRACTOR SHALL REMOVE AND DISPOSE OF SILT ACCUMULATIONS AT BAGGED STONE WHEN SO DIRECTED BY THE ENGINEER. BAGS SHALL BE REMOVED AND REPLACED WHENEVER THE ENGINEER DETERMINES THAT THEY HAVE DETERIORATED AND LOST THEIR EFFECTIVENESS.

NO SEPARATE PAYMENT WILL BE MADE FOR THIS WORK AND THE ENTIRE COST OF THIS WORK SHALL BE INCLUDED IN THE UNIT CONTRACT PRICE BID FOR THE SEVERAL PAY ITEMS.

TEMPORARY DRAINAGE AT END BENT

PROJECT NO. U-3615B
GUILFORD COUNTY
STATION: 233+87.56 -L-

SHEET 5 OF 5

STATE OF NORTH CAROLINA
DEPARTMENT OF TRANSPORTATION
RALEIGH

SUBSTRUCTURE

END BENTS 1 & 2
DETAILS

RIGHT LANE

REVISIONS						SHEET NO.
NO.	BY:	DATE:	NO.	BY:	DATE:	S-90
1			3			TOTAL SHEETS
2			4			91

ASSEMBLED BY :	E. I. OMILE	DATE : 9-25-13	
CHECKED BY :	T. H. FANG	DATE : 12-9-13	
DESIGN ENGINEER OF RECORD:	E. I. OMILE	DATE : 1-7-14	
DRAWN BY : WJH 12/11			
CHECKED BY : AAC 12/11			

03-DEC-2014 12:07
K:\TIPProjects-U\U3615b\Structures\Plans\Str3\Final plans\u3615b3_sd_ebts.dgn
tfang

STR. #3 STD. NO. EB_39_120S4_39BB