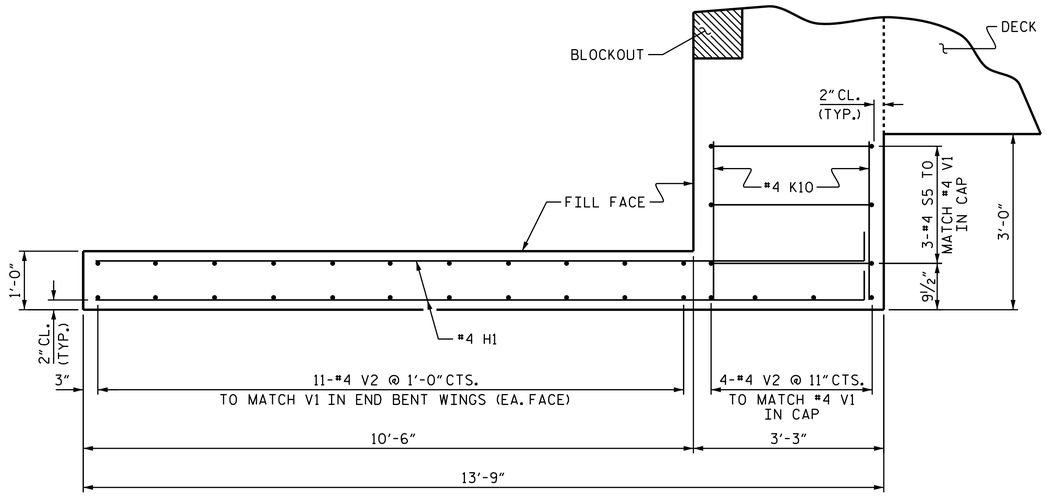

PLAN OF WING (W2)

AT END BENT 1

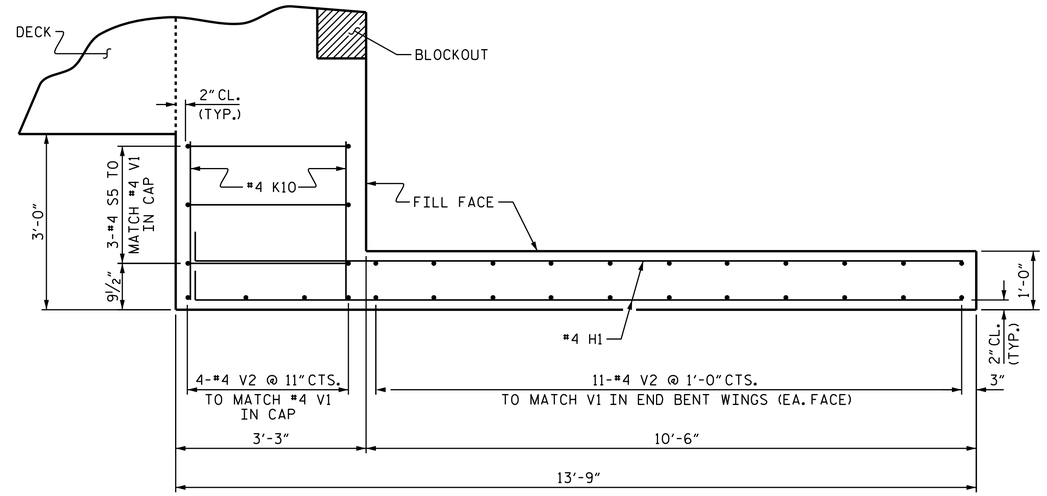

PLAN OF WING (W4)

AT END BENT 2

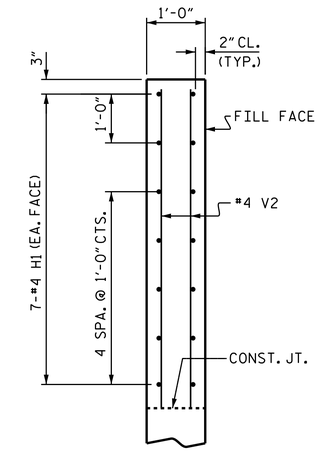

SECTION A-A

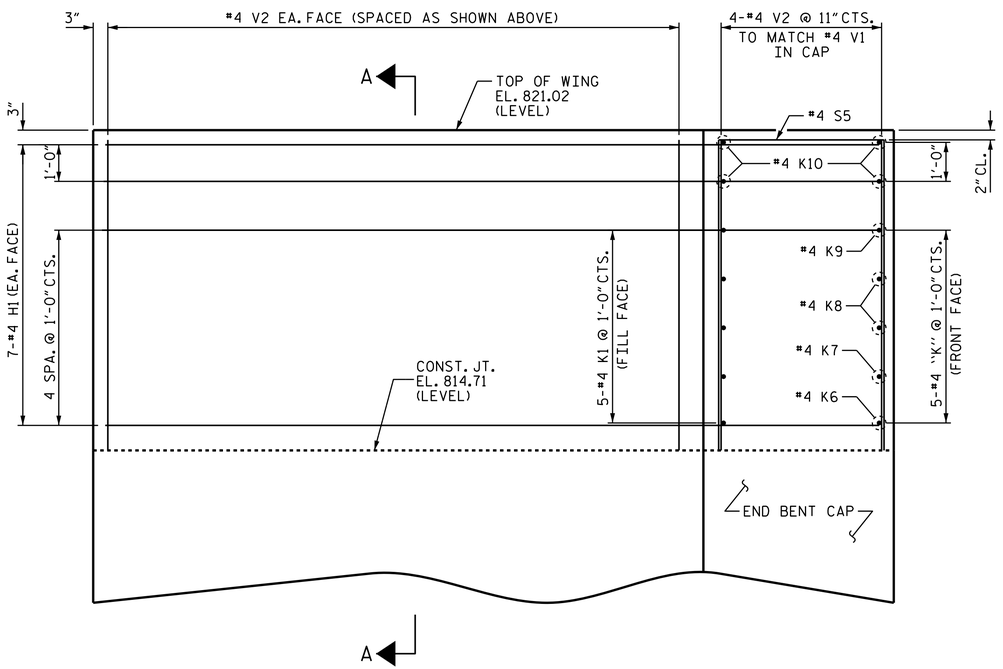

ELEVATION OF WING (W2)

AT END BENT 1

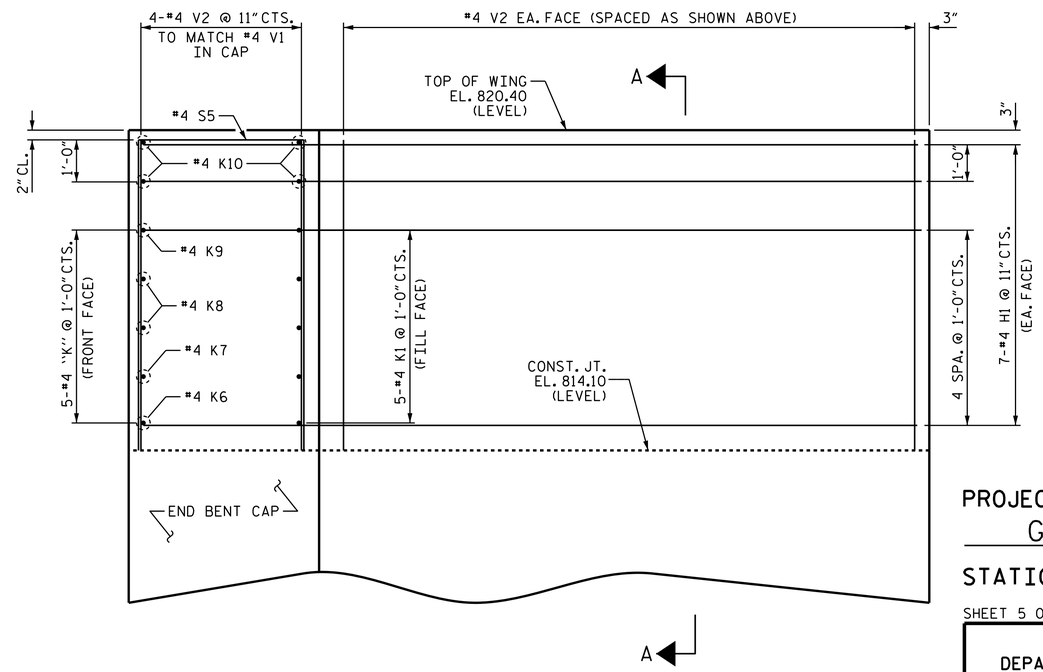

ELEVATION OF WING (W4)

AT END BENT 2

ABUTMENT WINGS

FOR END BENT REINFORCING STEEL AND DETAILS, SEE "SUBSTRUCTURE END BENTS 1 & 2" SHEETS.

PROJECT NO. U-3615B
GUILFORD COUNTY
STATION: 238+33.00 -L-

SHEET 5 OF 5

STATE OF NORTH CAROLINA
DEPARTMENT OF TRANSPORTATION
RALEIGH

SUPERSTRUCTURE

PLAN OF SPAN DETAILS
STAGE I

NORTH CAROLINA PROFESSIONAL SEAL 16301 ENGINEER TING-HSIUNG FANG

DocuSigned by: Ting H. Fang
E72088400977435...
12/3/2014

REVISIONS						SHEET NO.
NO.	BY:	DATE:	NO.	BY:	DATE:	S-13
1			3			TOTAL SHEETS
2			4			91

DRAWN BY : OT NGUYEN DATE : 6/10
CHECKED BY : E.C. LOCKLER DATE : 10/10
DESIGN ENGINEER OF RECORD: E.I. OMILE DATE : 1-7-14

03-DEC-2014 11:04
K:\TIPProjects-U\U3615b\Structures\Plans\str1\FinalPlans\u3615b_sd_s*.dgn
ttfang

STR. #1