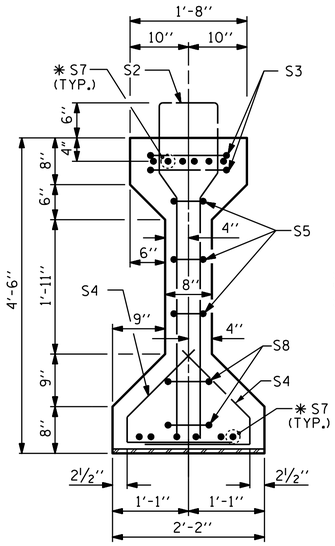

SECTION A-A

✱ FOR S7 BARS, SEE DETAIL "A" ON SHEET 4 OF 4.

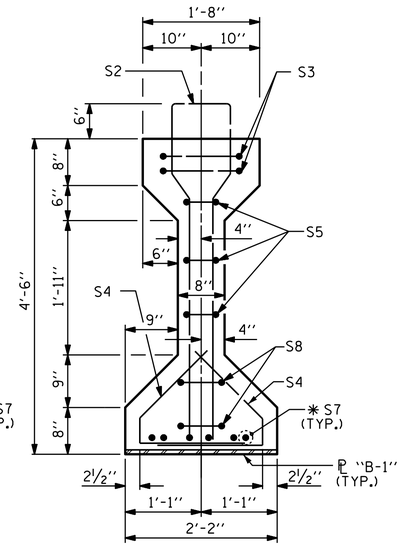

SECTION B-B

(FOR EMBEDED ℄ "B-1" DETAILS, SEE SHEET 4 OF 4)

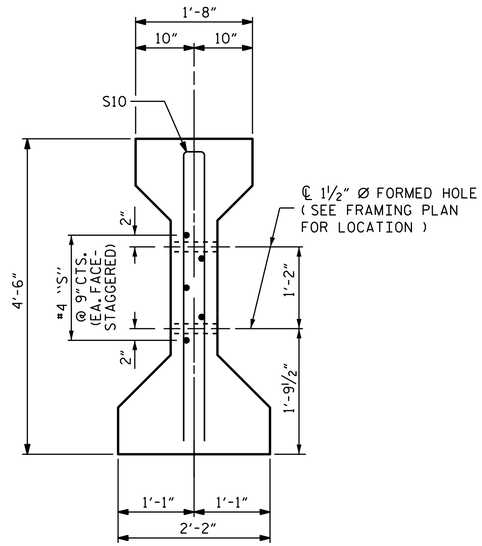

SECTION C-C

(S1 BARS NOT SHOWN)

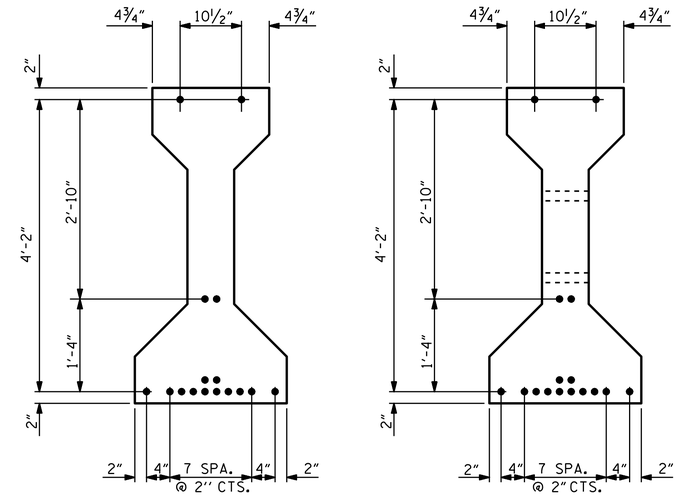

AT END OF GIRDER — AT ℄ OF GIRDER

0.6" Ø LOW RELAXATION STRAND LAYOUT

(16 STRANDS, ALL STRAIGHT)

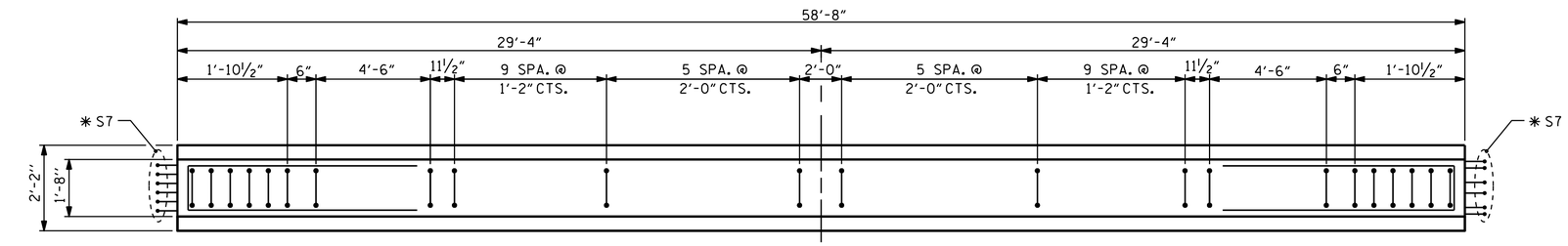

PLAN OF GIRDER

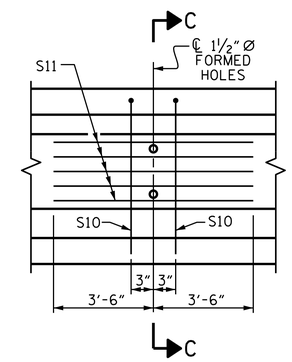

PARTIAL ELEVATION

SHOWING INTERMEDIATE DIAPHRAGM REINFORCING STEEL FOR ALL GIRDERS

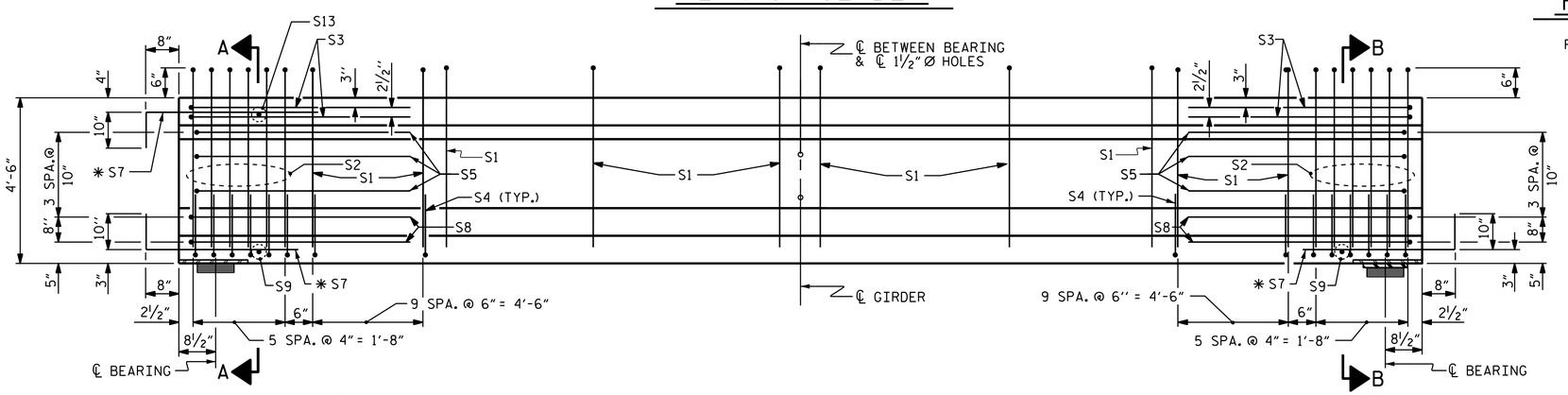

INTEGRAL END BENT — FIX

ELEVATION OF GIRDER

(SEE PARTIAL ELEVATION FOR ADDITIONAL "S" BARS IN THE INTERMEDIATE DIAPHRAGM AREA)
(SPAN A SHOWN, SPAN C SIMILAR BY ROTATION)

0.6" Ø L. R. GRADE 270 STRANDS

AREA (SQUARE INCHES)	ULTIMATE STRENGTH (LBS. PER STRAND)	APPLIED PRESTRESS (LBS. PER STRAND)
0.217	58,600	43,950

REINFORCING STEEL FOR ONE GIRDER

BAR	NUMBER	SIZE	TYPE	LENGTH	WEIGHT
S1	50	#4	1	10'-8"	356
S2	12	#6	1	10'-8"	192
S3	4	#4	2	9'-1"	24
S4	64	#4	3	3'-5"	146
S5	6	#4	2	8'-5"	34
✱ S7	18	#5	STR	3'-8"	69
S8	4	#4	2	8'-7"	23
S9	2	#3	STR	1'-10"	1
S10	2	#5	2	8'-8"	18
S11	5	#4	STR	7'-0"	23
S13	1	#3	STR	1'-4"	1

✱ S7 BARS SHALL BE BENT BEFORE SHIPMENT. HEAT BENDING SHALL NOT BE ALLOWED.

BAR TYPES

ALL BAR DIMENSIONS ARE OUT-TO-OUT

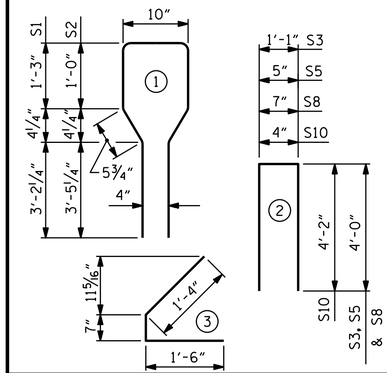

QUANTITIES FOR ONE GIRDER

	REINFORCING STEEL	5000 PSI CONCRETE	0.6" Ø L.R. STRANDS
	LB.	C.Y.	No.
	887	11.905	16

GIRDERS REQUIRED

	NUMBER	LENGTH	TOTAL LENGTH
STAGE I	12	58.67	704.00
STAGE II	12	58.67	704.00
TOTAL	24	—	1408.00

PROJECT NO. U-3615B
GUILFORD COUNTY
STATION: 238+33.00 -L-

SHEET 1 OF 4

STATE OF NORTH CAROLINA
DEPARTMENT OF TRANSPORTATION
RALEIGH

STANDARD
AASHTO TYPE IV
PRESTRESSED CONCRETE GIRDER
CONTINUOUS FOR LIVE LOAD
SPANS A & C

ASSEMBLED BY :	OT NGUYEN	DATE :	6-10
CHECKED BY :	E.C. LOCKLEAR	DATE :	10-10
DESIGN ENGINEER OF RECORD :	E.I. OMILE	DATE :	1-14

DRAWN BY : ELR 8/91	REV. 10/17/00R	RWW/LES	
CHECKED BY : GRP 8/91	REV. 5/1/06R	TLA/GM	
	REV. 10/1/11	MAA/GM	

NORTH CAROLINA PROFESSIONAL SEAL 16301 ENGINEER TING HSIUNG FANG

DocuSigned by: Ting H. Fang
E72086400977435...
12/3/2014

REVISIONS						SHEET NO.
NO.	BY:	DATE:	NO.	BY:	DATE:	S-17
1			3			TOTAL SHEETS
2			4			91

STR. #1

STD. NO. PCG6

03-DEC-2014 11:04
K:\TIPProjects-U\U3615b\Structures\Plans\str1\FinalPlans\U3615B_SD_G*.dgn
tfang