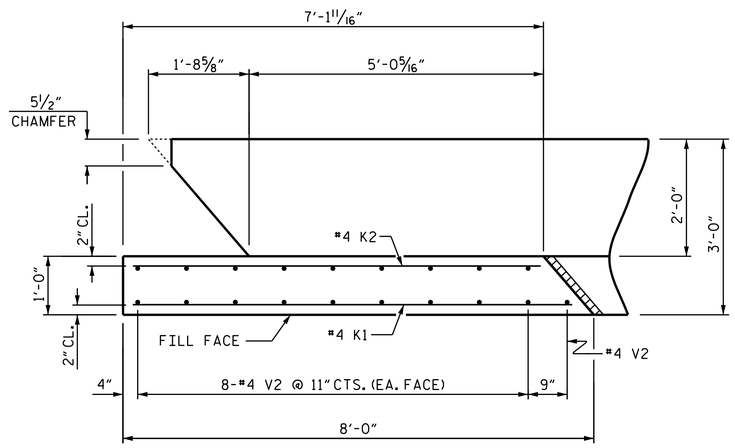

PLAN OF WING (W1)

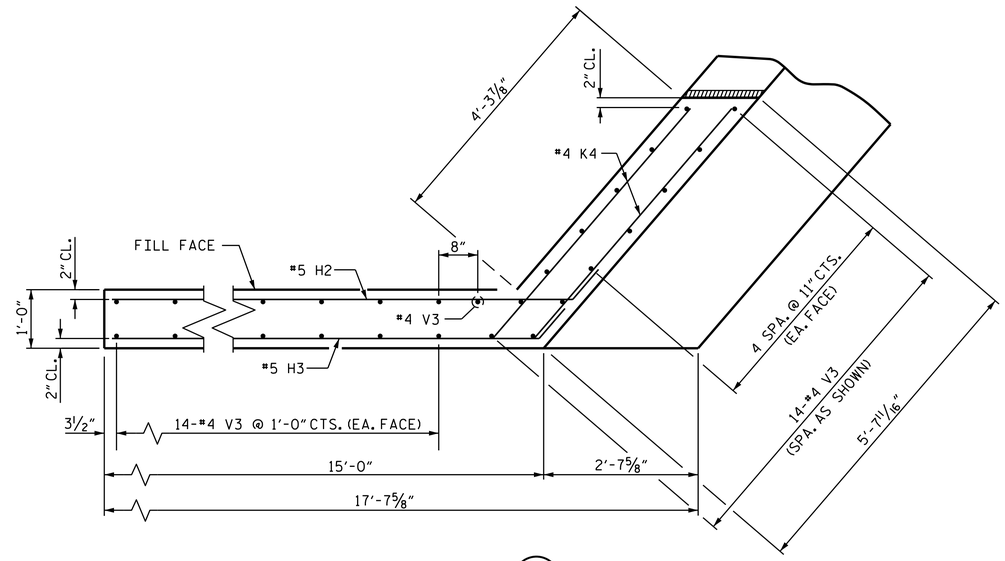

PLAN OF WING (W2)

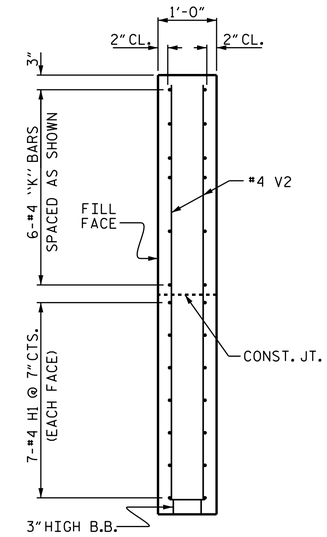

SECTION X-X

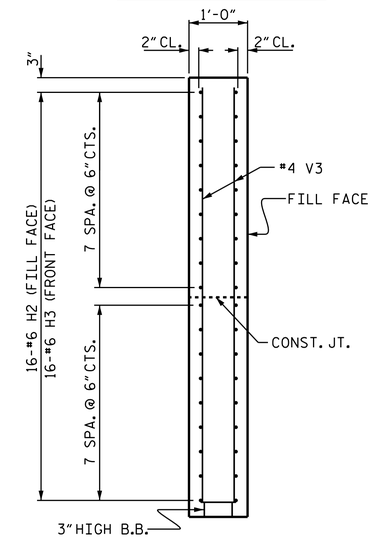

SECTION Y-Y

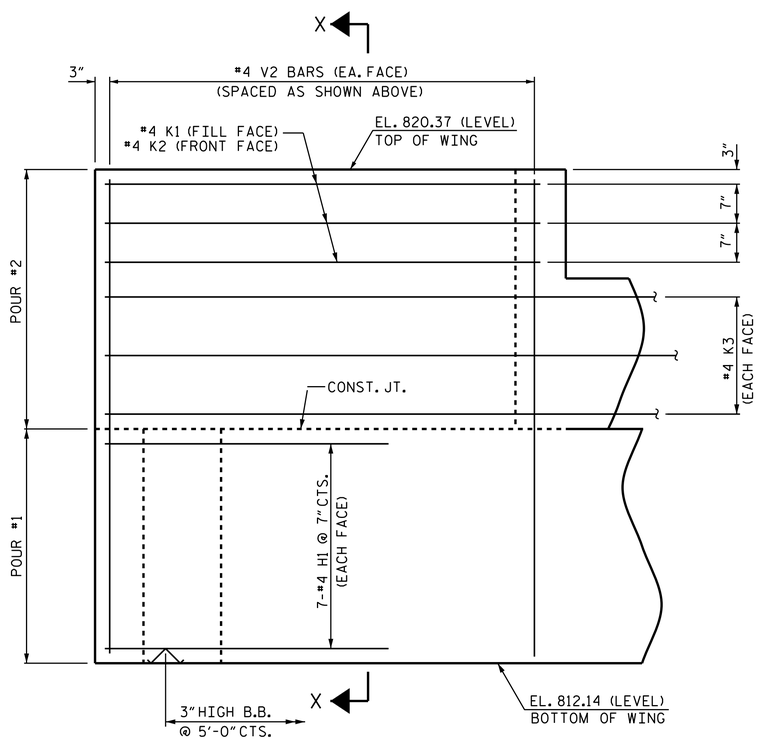

ELEVATION OF WING (W1)

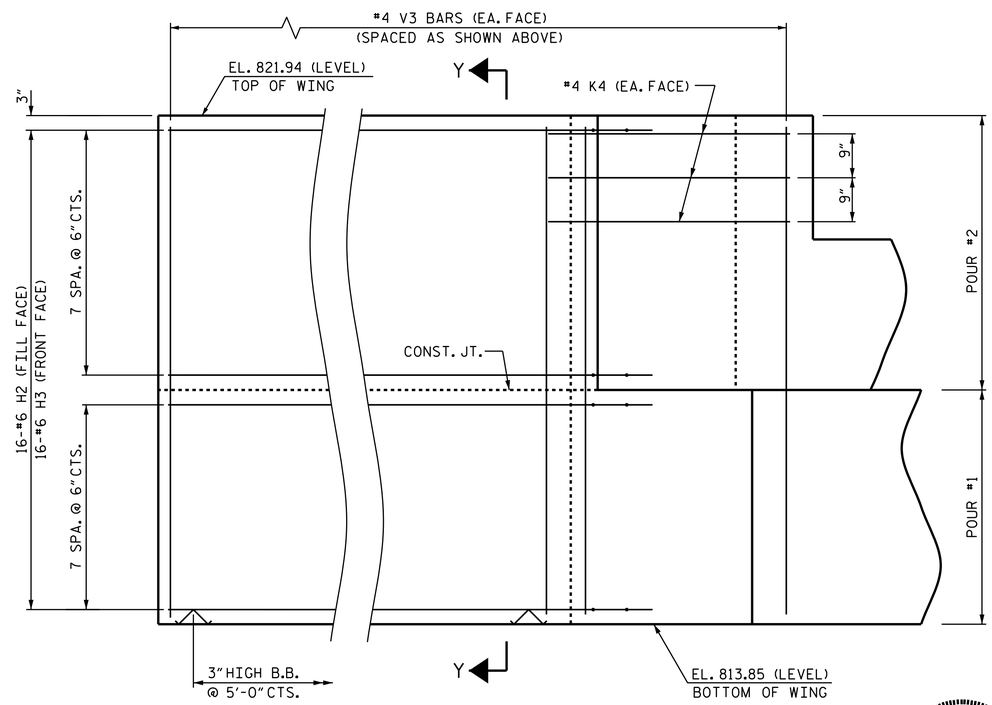

ELEVATION OF WING (W2)

WING DETAILS

PROJECT NO. U-3615B
GUILFORD COUNTY
STATION: 233+87.56 -L-

SHEET 2 OF 5

STATE OF NORTH CAROLINA
DEPARTMENT OF TRANSPORTATION
RALEIGH

SUBSTRUCTURE

END BENT 1
WING DETAILS

RIGHT LANE

NORTH CAROLINA PROFESSIONAL SEAL 16301 ENGINEER TING HSIUNG FANG

DocuSigned by: Ting H. Fang
E72086A0977435...
12/3/2014

ASSEMBLED BY : T. KIRSCHBAUM	DATE : 12/11/13		
CHECKED BY : R.P. PATEL	DATE : 12/13/13		
DESIGN ENGINEER OF RECORD: E. I. OMILE	DATE : 1/7/14		
DRAWN BY : WJH 12/11			
CHECKED BY : AAC 12/11			

REVISIONS								SHEET NO.
NO.	BY:	DATE:	NO.	BY:	DATE:			S-87
1			3					TOTAL SHEETS
2			4					91

STR. #3 STD. NO. EB_39_120S4_39BB

03-DEC-2014 12:06
K:\TIPProjects-U\U3615b\Structures\Plans\Str3\Finalplans\u3615b3_sd_ebts.dgn
ttfang