NOTES

STIRRUPS IN CAP MAY BE SHIFTED AS NECESSARY TO CLEAR DOWELS.

THE CONCRETE IN THE SHADED AREA OF THE WING SHALL BE POURED AFTER THE SIDEWALK OR CONCRETE BARRIER RAIL IS CAST IF SLIP FORMING IS UDED.

FOR PILE SPLICE DETAILS, SEE SHEET 5 OF 5.

FOR WING DETAILS, SEE SHEET 2 OF 5.

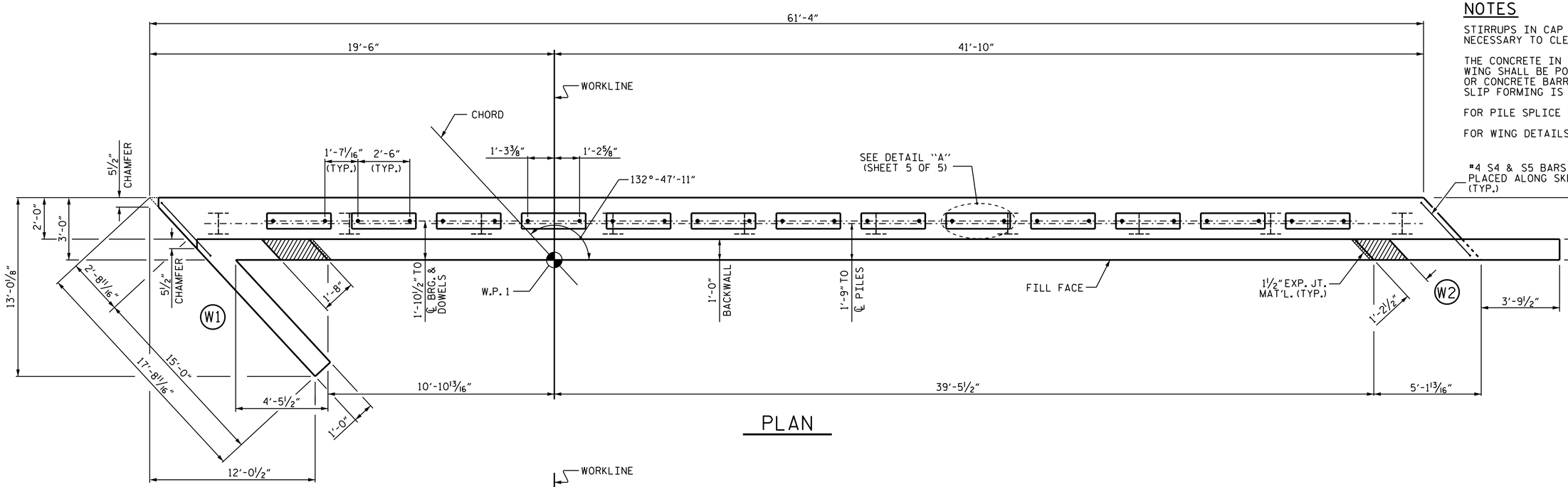

PLAN

TOP OF PILE ELEVATIONS	
1	812.82
2	812.95
3	813.08
4	813.21
5	813.34
6	813.47
7	813.60
8	813.73
9	813.86
10	813.99

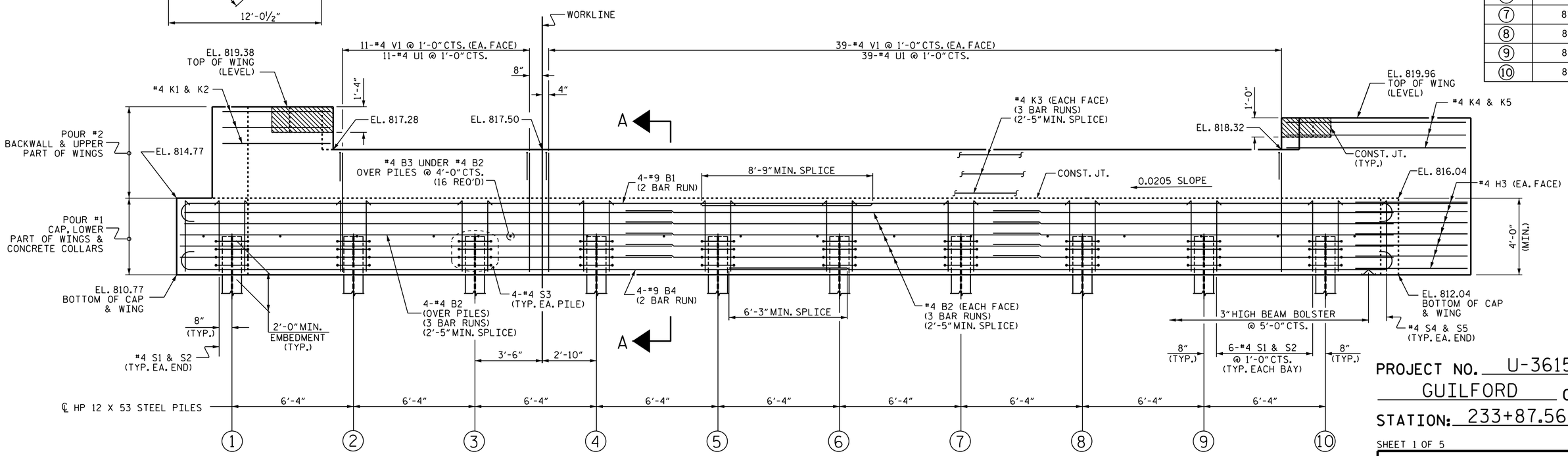

ELEVATION

LEFT WING NOT SHOWN FOR CLARITY. FOR SECTION A-A, SEE SHEET 5 OF 5.
CONCRETE COLLARS FOR STEEL PILES NOT SHOWN IN PLAN AND ELEVATION VIEWS FOR CLARITY.
SEE "CORROSION PROTECTION FOR STEEL PILES DETAIL", SHEET 5 OF 5.

PROJECT NO. U-3615B
GUILFORD COUNTY
STATION: 233+87.56 -L-

SHEET 1 OF 5

STATE OF NORTH CAROLINA
DEPARTMENT OF TRANSPORTATION
RALEIGH

SUBSTRUCTURE

END BENT 1

LEFT LANE

NORTH CAROLINA PROFESSIONAL SEAL 16301 ENGINEER TING-HSILUNG FANG

DocuSigned by: Ting H. Fang
E72084409974 35...
12/3/2014

ASSEMBLED BY :	E. I. OMILE	DATE : 12-10-13	
CHECKED BY :	T. H. FANG	DATE : 12-13-13	
DESIGN ENGINEER OF RECORD:	E. I. OMILE	DATE : 1-7-14	
DRAWN BY : WJH 12/11			
CHECKED BY : AAC 12/11			

REVISIONS								SHEET NO.
NO.	BY:	DATE:	NO.	BY:	DATE:			S-63
1			3					TOTAL SHEETS
2			4					91

03-DEC-2014 11:41
K:\TIPProjects-U\U3615b\Structures\Plans\Str2\Final plans\u3615b2_sd_ebts.dgn
tfang

STR. #2 STD. NO. EB_39_120S4_39BB