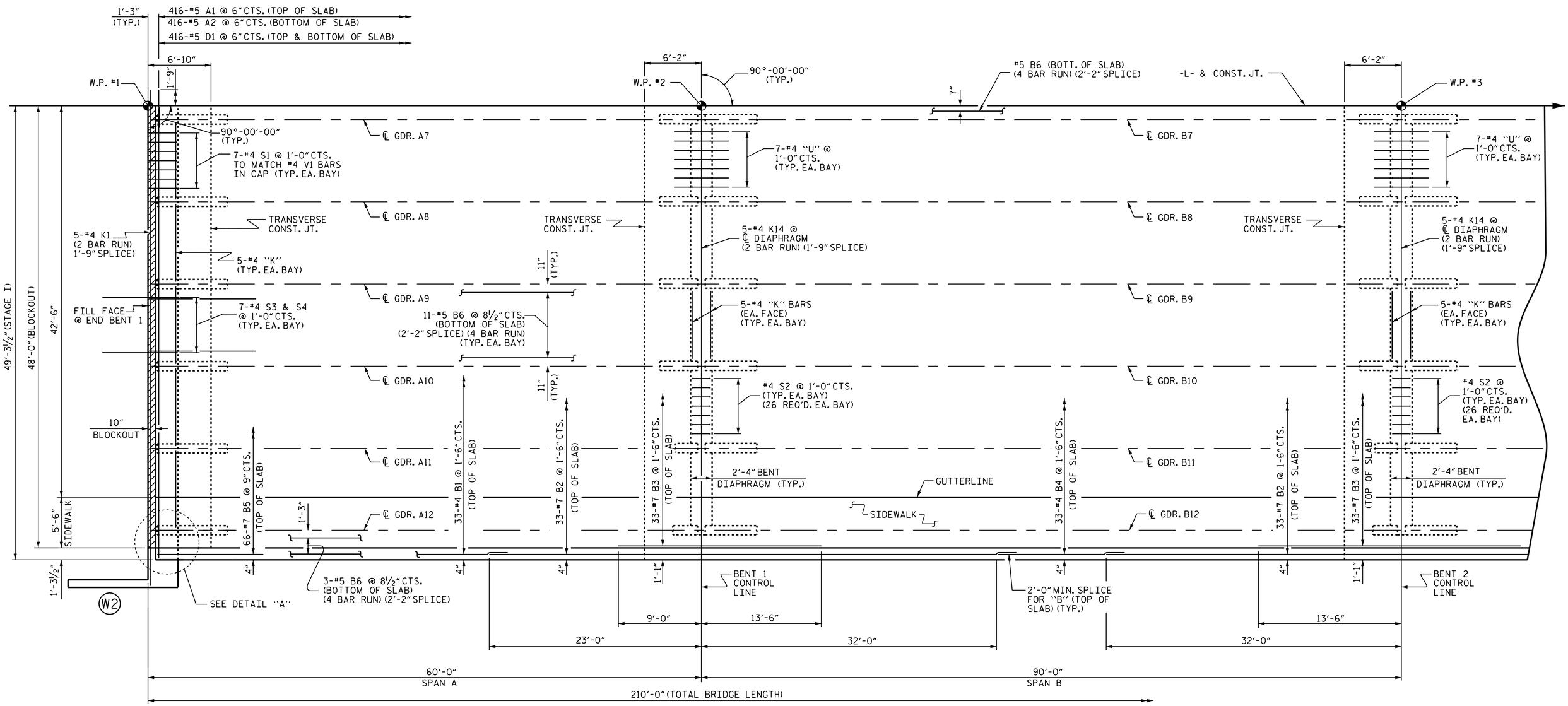

PLAN OF SPANS A & B

CONCRETE MEDIAN NOT SHOWN FOR CLARITY

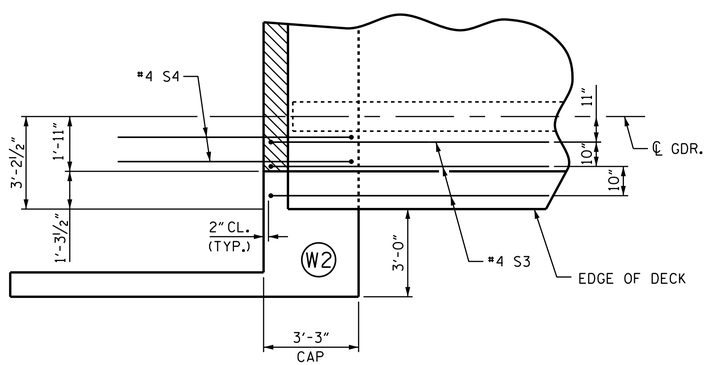

DETAIL "A"

S1 BARS NOT SHOWN FOR CLARITY.

PROJECT NO. U-3615B

GUILFORD COUNTY

STATION: 238+33.00 -L-

SHEET 1 OF 5

STATE OF NORTH CAROLINA
DEPARTMENT OF TRANSPORTATION
RALEIGH

SUPERSTRUCTURE

PLAN OF SPAN
SPANS A & B

STAGE I

NORTH CAROLINA PROFESSIONAL SEAL 16301 ENGINEER TING HSIUNG FANG

DocuSigned by: Ting H. Fang
E72088400977435...
12/3/2014

REVISIONS								SHEET NO.
NO.	BY:	DATE:	NO.	BY:	DATE:			S-9
1			3					TOTAL SHEETS
2			4					91

DRAWN BY : OT NGUYEN DATE : 6/10
CHECKED BY : E.C. LOCKLER DATE : 10/10
DESIGN ENGINEER OF RECORD: E.I. OMILE DATE : 1-7-14

03-DEC-2014 11:03
K:\TIPProjects-U\U3615b\Structures\Plans\str1\FinalPlans\u3615b_sd_s*.dgn
ttfang

STR. #1