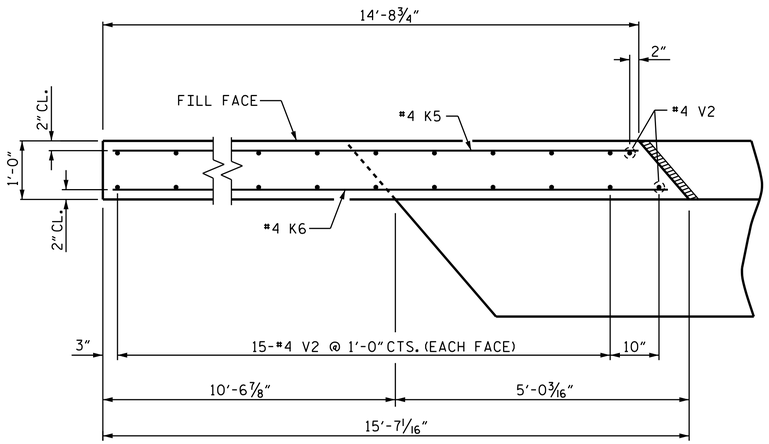

PLAN OF WING (W3)

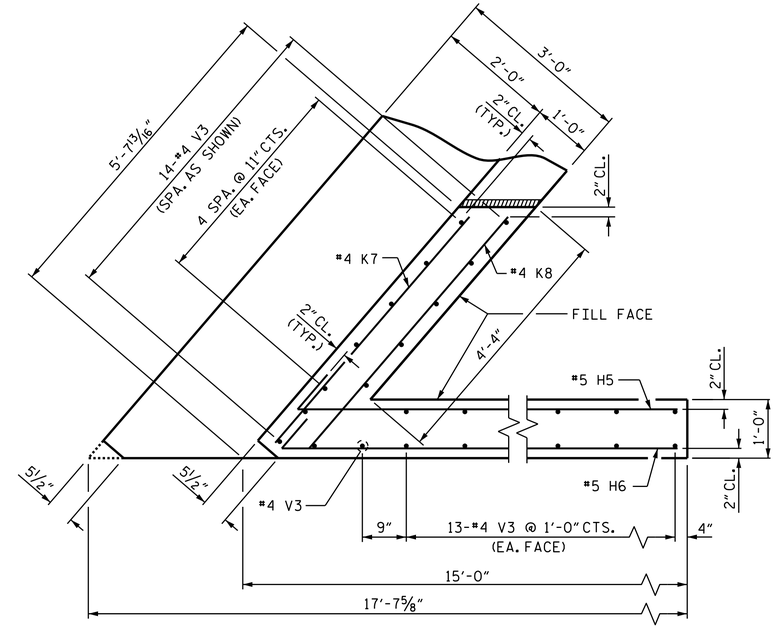

PLAN OF WING (W4)

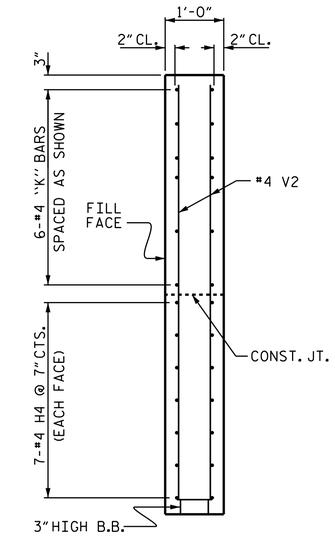

SECTION X-X

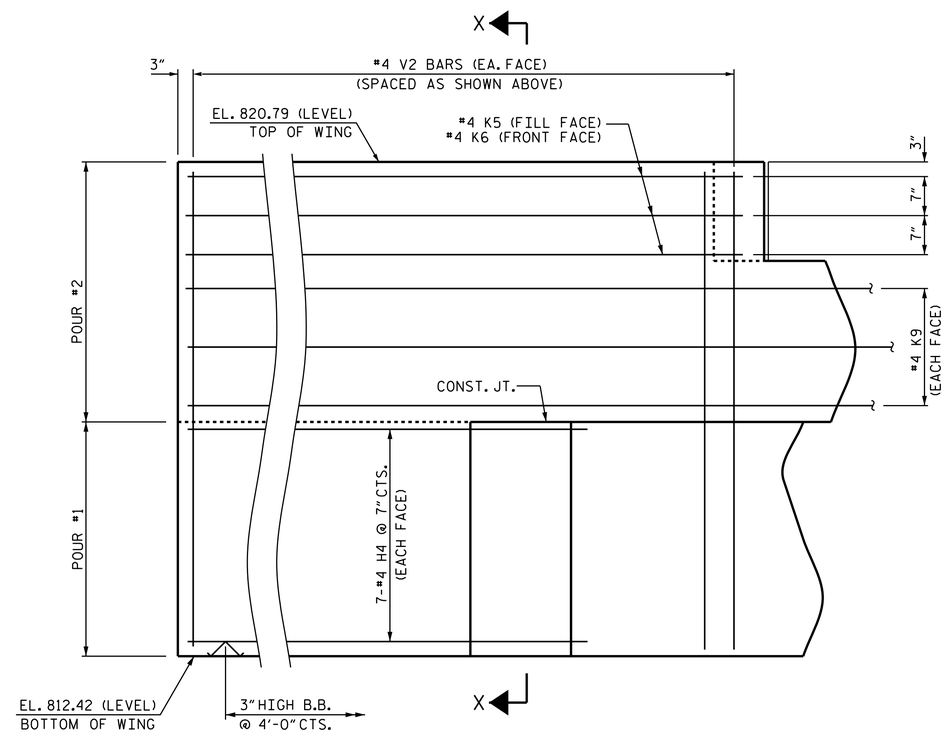

ELEVATION OF WING (W3)

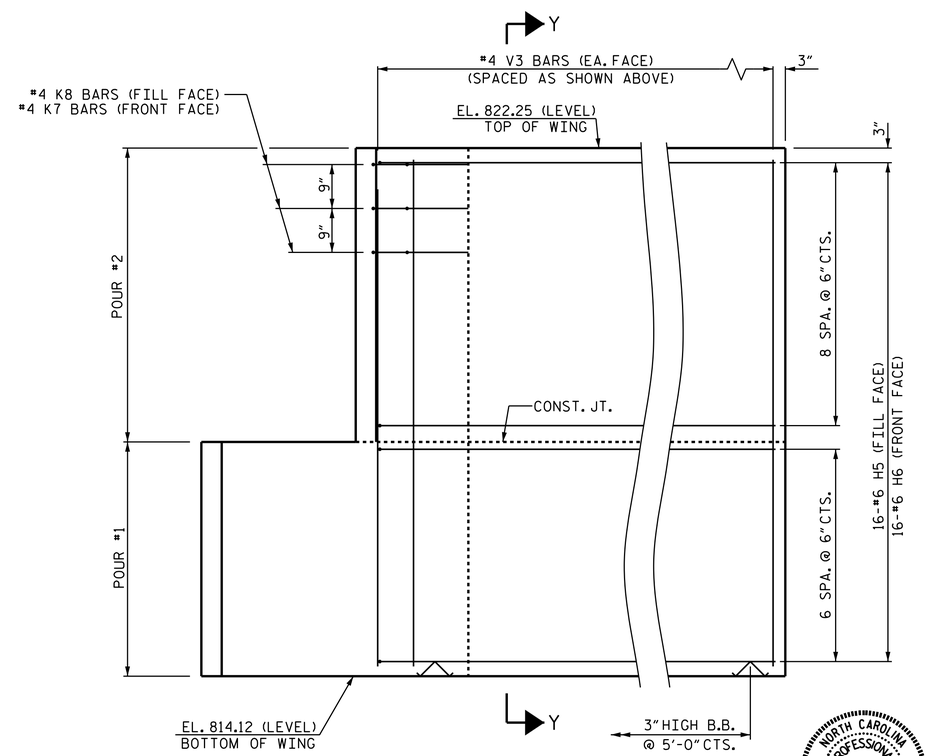

ELEVATION OF WING (W4)

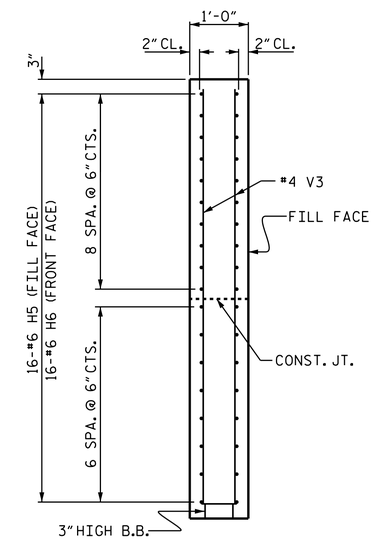

SECTION Y-Y

PROJECT NO. U-3615B

GUILFORD COUNTY

STATION: 233+87.56 -L-

SHEET 4 OF 5

STATE OF NORTH CAROLINA
DEPARTMENT OF TRANSPORTATION
RALEIGH

SUBSTRUCTURE

END BENT 2
WING DETAILS

RIGHT LANE

ASSEMBLED BY :	T. KIRSCHBAUM	DATE : 12/11/13	
CHECKED BY :	R.P. PATEL	DATE : 12/13/13	
DESIGN ENGINEER OF RECORD:	E. I. OMILE	DATE : 1-7-14	
DRAWN BY : WJH 12/11			
CHECKED BY : AAC 12/11			

WING DETAILS

NORTH CAROLINA PROFESSIONAL SEAL 16301 ENGINEER TING HSIUNG FANG

DocuSigned by: Ting H. Fang
E72088400977435...
12/3/2014

REVISIONS						SHEET NO.
NO.	BY:	DATE:	NO.	BY:	DATE:	S-89
1			3			TOTAL SHEETS
2			4			91

03-DEC-2014 12:07
K:\TIPProjects-U\U3615b\Structures\Plans\Str3\Final plans\u3615b3_sd_ebts.dgn
ttfang

STR. #3 STD. NO. EB_39_120S4_39BB