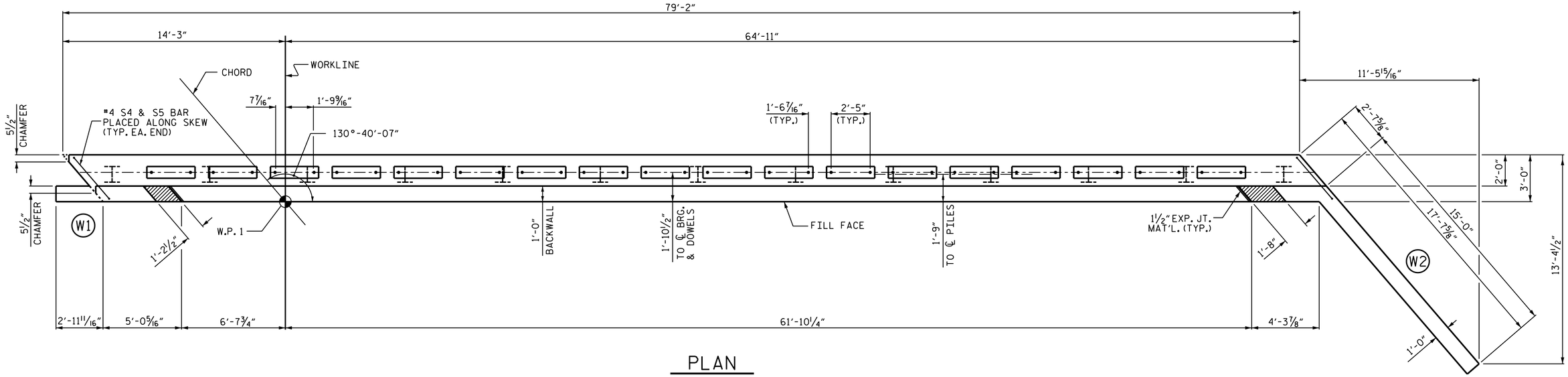

PLAN

TOP OF PILE ELEVATIONS	
1	814.19
2	814.32
3	814.45
4	814.58
5	814.72
6	814.85
7	814.99
8	815.12
9	815.26
10	815.39
11	815.53
12	815.67
13	815.80

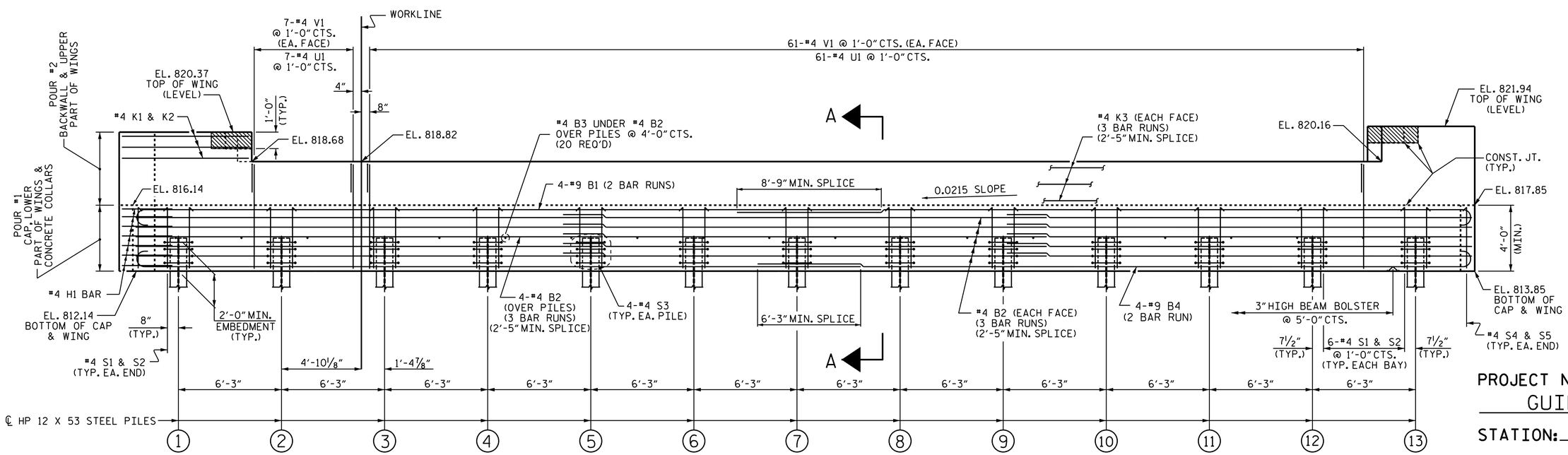

ELEVATION

RIGHT WING NOT SHOWN FOR CLARITY. FOR SECTION A-A, SEE SHEET 5 OF 5.
CONCRETE COLLARS FOR STEEL PILES NOT SHOWN IN PLAN AND ELEVATION VIEWS FOR CLARITY.
SEE "CORROSION PROTECTION FOR STEEL PILES DETAIL", SHEET 5 OF 5.

NOTES

STIRRUPS IN CAP MAY BE SHIFTED AS NECESSARY TO CLEAR DOWELS.

THE CONCRETE IN THE SHADED AREA OF THE WING SHALL BE POURED AFTER THE SIDEWALK OR CONCRETE BARRIER RAIL IS CAST IF SLIP FORMING IS UDED.

FOR PILE SPLICE DETAILS, SEE SHEET 5 OF 5.

FOR WING DETAILS, SEE SHEET 2 OF 5.

NORTH CAROLINA PROFESSIONAL SEAL 16301 ENGINEER TING-HSIUNG FANG

DocuSigned by: Ting H. Fang
E72088400977435...
12/3/2014

PROJECT NO. U-3615B
GUILFORD COUNTY
STATION: 233+87.56 -L-

SHEET 1 OF 5

STATE OF NORTH CAROLINA
DEPARTMENT OF TRANSPORTATION
RALEIGH

SUBSTRUCTURE

END BENT 1

RIGHT LANE

REVISIONS						SHEET NO.
NO.	BY:	DATE:	NO.	BY:	DATE:	S-86
1			3			TOTAL SHEETS
2			4			91

ASSEMBLED BY : T. KIRSCHBAUM	DATE : 12/11/13
CHECKED BY : R.P. PATEL	DATE : 12/13/13
DESIGN ENGINEER OF RECORD: E. I. OMILE	DATE : 1/7/14
DRAWN BY : WJH 12/11	
CHECKED BY : AAC 12/11	

03-DEC-2014 12:06
K:\TIPProjects-U\U3615b\Structures\Plans\Str3\Finalplans\u3615b3_sd_ebts.dgn
tfang

STR. #3 STD. NO. EB_39_120S4_39BB