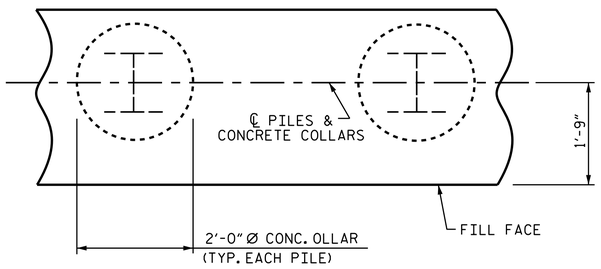

PLAN

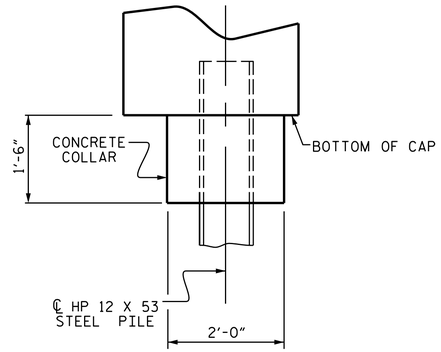

ELEVATION

CORROSION PROTECTION FOR STEEL PILES DETAIL

END BENT 1 SHOWN, END BENT 2 SIMILAR BY ROTATION

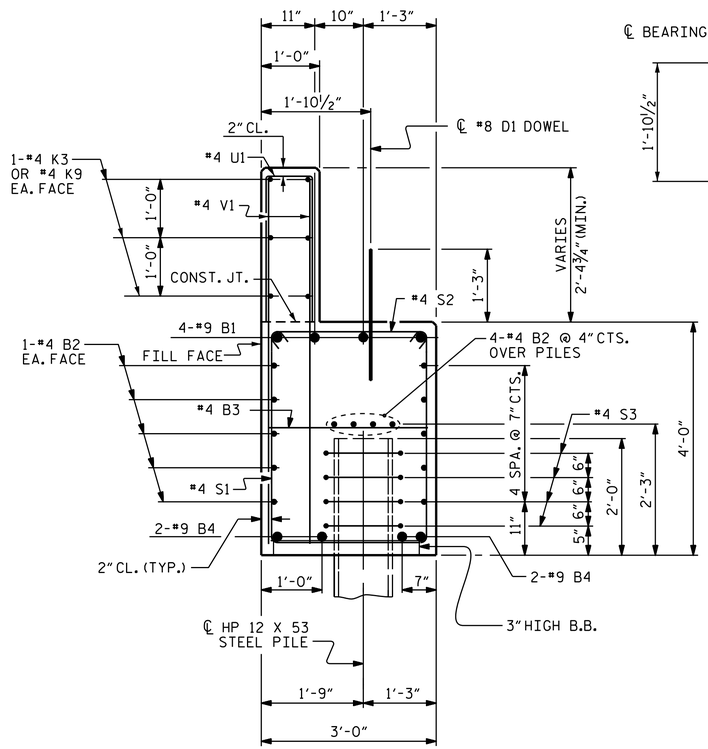

SECTION A-A

(CONCRETE COLLAR NOT SHOWN FOR CLARITY.
SEE "CORROSION PROTECTION FOR STEEL PILES DETAIL.")

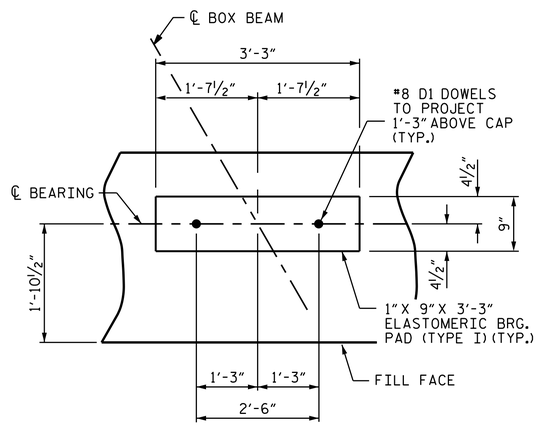

DETAIL "A"

END BENT 1 SHOWN, END BENT 2 SIMILAR BY ROTATION

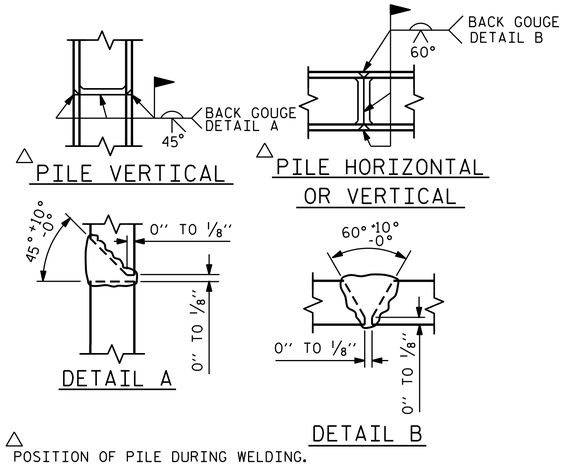

△ POSITION OF PILE DURING WELDING.

PILE SPLICE DETAILS

BAR TYPES

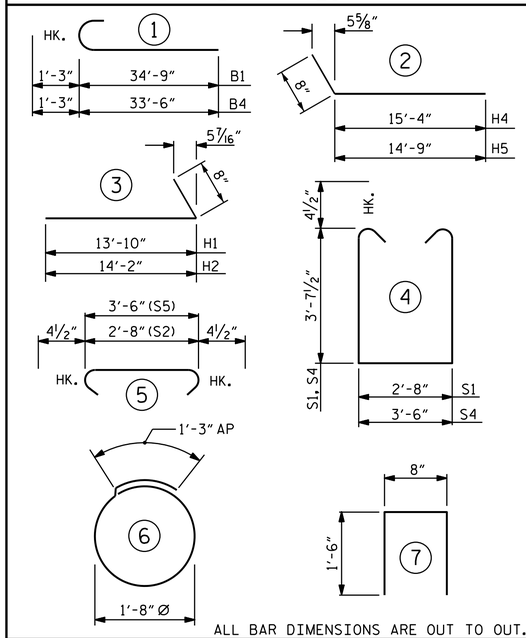

ALL BAR DIMENSIONS ARE OUT TO OUT.

END BENT 1	
HP 12 X 53 STEEL PILES	
NO: 10	LIN. FT. = 185
PILE EXCAVATION	
IN SOIL	LIN. FT. = 135
NOT IN SOIL	LIN. FT. = 27

END BENT 2	
HP 12 X 53 STEEL PILES	
NO: 10	LIN. FT. = 250
PILE EXCAVATION	
IN SOIL	LIN. FT. = 180
NOT IN SOIL	LIN. FT. = 36

BILL OF MATERIAL
END BENT 1

BAR	NO.	SIZE	TYPE	LENGTH	WEIGHT
B1	8	#9	1	36'-0"	979
B2	42	#4	STR	21'-11"	615
B3	16	#4	STR	2'-8"	29
B4	8	#9	1	34'-9"	945
D1	26	#8	STR	2'-3"	156
H1	17	#6	3	14'-6"	370
H2	17	#6	3	14'-10"	379
H3	14	#4	STR	6'-6"	61
K1	3	#4	STR	5'-1"	10
K2	3	#4	STR	5'-4"	11
K3	18	#4	STR	23'-4"	281
K4	3	#4	STR	9'-2"	18
K5	3	#4	STR	8'-8"	17
S1	56	#4	4	10'-8"	399
S2	56	#4	5	3'-5"	128
S3	40	#4	6	6'-6"	174
S4	2	#4	4	11'-6"	15
S5	2	#4	5	4'-3"	6
U1	50	#4	7	3'-8"	122
V1	100	#4	STR	6-1"	406
V2	41	#4	STR	8'-3"	226
V3	20	#4	STR	7'-7"	101

REINFORCING STEEL 5448 LBS.

CLASS A CONCRETE BREAKDOWN (FOR ONE END BENT No. 1)

POUR #1	CAP, LOWER PART OF WINGS & COLLARS	31.6 C.Y.
POUR #2	BACKWALL & UPPER PART OF WINGS	9.2 C.Y.
TOTAL CLASS A CONCRETE		40.8 C.Y.

BILL OF MATERIAL
END BENT 2

BAR	NO.	SIZE	TYPE	LENGTH	WEIGHT
B1	8	#9	1	36'-0"	979
B2	42	#4	STR	21'-11"	615
B3	16	#4	STR	2'-8"	29
B4	8	#9	1	34'-9"	945
D1	26	#8	STR	2'-3"	156
H4	17	#6	2	16'-0"	409
H5	17	#6	2	15'-5"	394
H6	14	#4	STR	4'-5"	41
K6	6	#4	STR	5'-5"	22
K7	3	#4	STR	7'-1"	14
K8	3	#4	STR	6'-7"	13
K9	18	#4	STR	22'-9"	274
S1	56	#4	4	10'-8"	399
S2	56	#4	5	3'-5"	128
S3	40	#4	6	6'-6"	174
S4	2	#4	4	11'-6"	15
S5	2	#4	5	4'-3"	6
U1	50	#4	7	3'-8"	122
V1	100	#4	STR	6-1"	406
V2	43	#4	STR	8'-4"	239
V3	15	#4	STR	7'-7"	76

REINFORCING STEEL 5456 LBS.

CLASS A CONCRETE BREAKDOWN (FOR ONE END BENT No. 2)

POUR #1	CAP, LOWER PART OF WINGS & COLLARS	31.3 C.Y.
POUR #2	BACKWALL & UPPER PART OF WINGS	9.2 C.Y.
TOTAL CLASS A CONCRETE		40.5 C.Y.

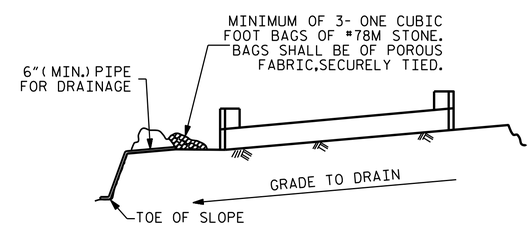

BAGGED STONE AND PIPE SHALL BE PLACED IMMEDIATELY AFTER COMPLETION OF END BENT EXCAVATION. PIPE MAY BE EITHER CONCRETE, CORRUGATED STEEL, CORRUGATED ALUMINUM ALLOY, OR CORRUGATED PLASTIC. PERFORATED PIPE WILL NOT BE ALLOWED.

BAGGED STONE SHALL REMAIN IN PLACE UNTIL THE ENGINEER DIRECTS THAT IT BE REMOVED. THE CONTRACTOR SHALL REMOVE AND DISPOSE OF SILT ACCUMULATIONS AT BAGGED STONE WHEN SO DIRECTED BY THE ENGINEER. BAGS SHALL BE REMOVED AND REPLACED WHENEVER THE ENGINEER DETERMINES THAT THEY HAVE DETERIORATED AND LOST THEIR EFFECTIVENESS.

NO SEPARATE PAYMENT WILL BE MADE FOR THIS WORK AND THE ENTIRE COST OF THIS WORK SHALL BE INCLUDED IN THE UNIT CONTRACT PRICE BID FOR THE SEVERAL PAY ITEMS.

TEMPORARY DRAINAGE AT END BENT

DocuSigned by: Ting H. Fang
E72088A0097435...
12/3/2014

PROJECT NO. U-3615B
GUILFORD COUNTY
STATION: 233+87.56 -L-

SHEET 5 OF 5

STATE OF NORTH CAROLINA
DEPARTMENT OF TRANSPORTATION
RALEIGH

SUBSTRUCTURE

END BENTS 1 & 2 DETAILS

LEFT LANE

REVISIONS						SHEET NO.
NO.	BY:	DATE:	NO.	BY:	DATE:	S-67
1			3			TOTAL SHEETS
2			4			91

ASSEMBLED BY :	E. I. OMILE	DATE : 9-25-13	
CHECKED BY :	T. H. FANG	DATE : 12-9-13	
DESIGN ENGINEER OF RECORD:	E. I. OMILE	DATE : 1-7-14	
DRAWN BY : WJH 12/11			
CHECKED BY : AAC 12/11			

03-DEC-2014 11:41
K:\TIPProjects-U\U3615b\Structures\Plans\Str2\Final plans\u3615b2_sd_ebts.dgn
ttfang

STR. #2 STD. NO. EB_39_120S4_39BB