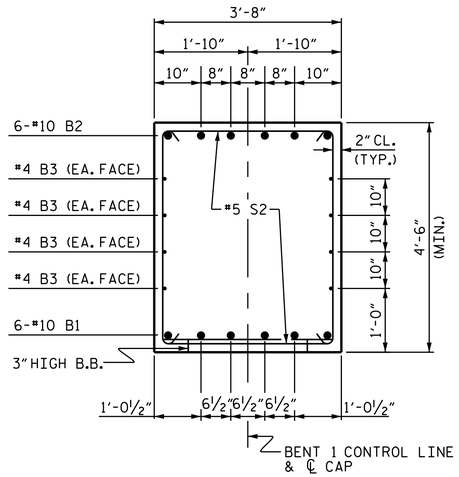

SECTION A-A

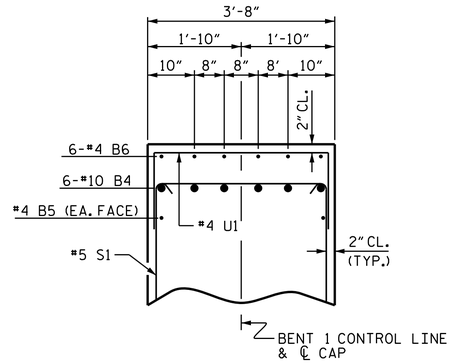

PARTIAL SECTION B-B

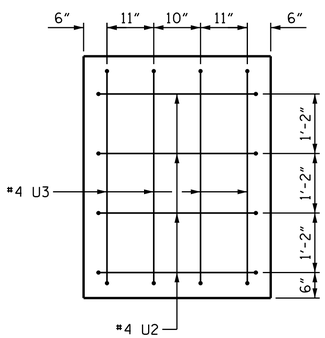

SECTION X-X

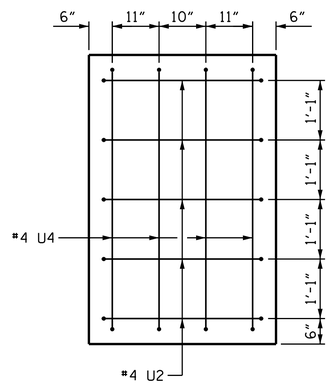

SECTION Y-Y

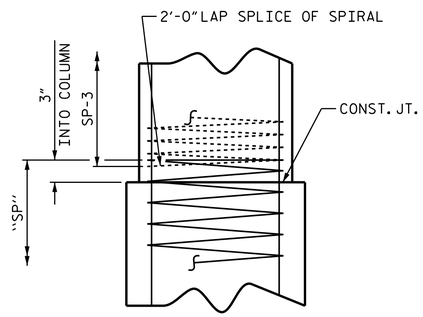

CONSTRUCTION JOINT DETAIL

BAR TYPES

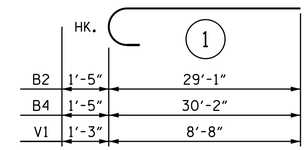

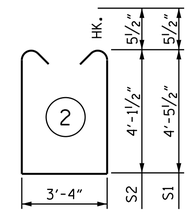

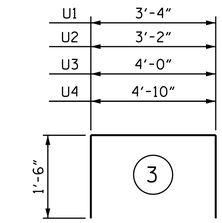

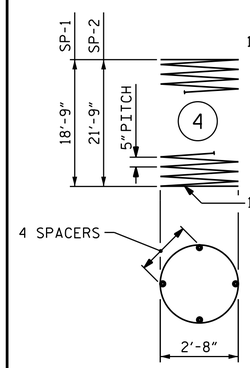

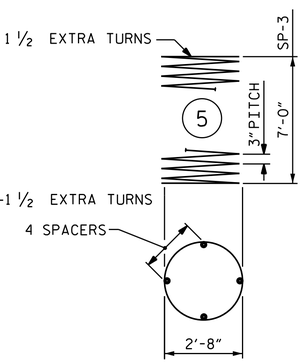

ALL BAR DIMENSIONS ARE OUT TO OUT.

BILL OF MATERIAL

BENT 1 - STAGE I

BAR	NO.	SIZE	TYPE	LENGTH	WEIGHT
B1	6	#10	STR	48'-4"	1248
B2	6	#10	1	30'-6"	787
B3	16	#4	STR	25'-5"	272
B4	6	#10	1	31'-7"	815
B5	2	#4	STR	21'-7"	29
B6	6	#4	STR	12'-5"	50
B13	3	#4	STR	3'-4"	7
M1	12	#9	STR	26'-9"	1091
M2	24	#9	STR	29'-9"	2428
S1	35	#5	2	13'-2"	481
S2	18	#5	2	12'-6"	235
U1	45	#4	3	6'-4"	190
U2	9	#4	3	6'-2"	37
U3	4	#4	3	7'-0"	19
U4	4	#4	3	7'-10"	21
V1	36	#9	1	9'-11"	1214
REINFORCING STEEL				LBS.	8,925
SP-1	1	*	4	385'-10"	402
SP-2	2	*	4	443'-3"	924
SP-3	3	**	5	249'-0"	499
SPIRAL COLUMN REINFORCING STEEL				LBS.	1,825

CLASS A CONCRETE		
POUR #2 - COLUMNS	CU. YDS.	5.5
POUR #3 - CAP	CU. YDS.	32.4
TOTAL	CU. YDS.	37.9
DRILLED PIER QUANTITIES:		
DRILLED PIER CONCRETE		
POUR #1 - DRILLED PIERS	CU. YDS.	22.7
3'-6" Ø DRILLED PIERS IN SOIL	LIN. FT.	45.75
3'-6" Ø DRILLED PIERS NOT IN SOIL	LIN. FT.	18.0
PERMANENT STEEL CASING FOR 3'-6" Ø DRILLED PIERS	LIN. FT.	48.8
CSL TUBES	LIN. FT.	273.0

* THE SP-1 & SP-2 SPIRAL REINFORCING STEEL SHALL BE W31 OR D-31 COLD DRAWN WIRE OR #5 PLAIN OR DEFORMED BAR.

** THE SP-3 SPIRAL REINFORCING STEEL SHALL BE W20 OR D-20 COLD DRAWN WIRE OR #4 PLAIN OR DEFORMED BAR.

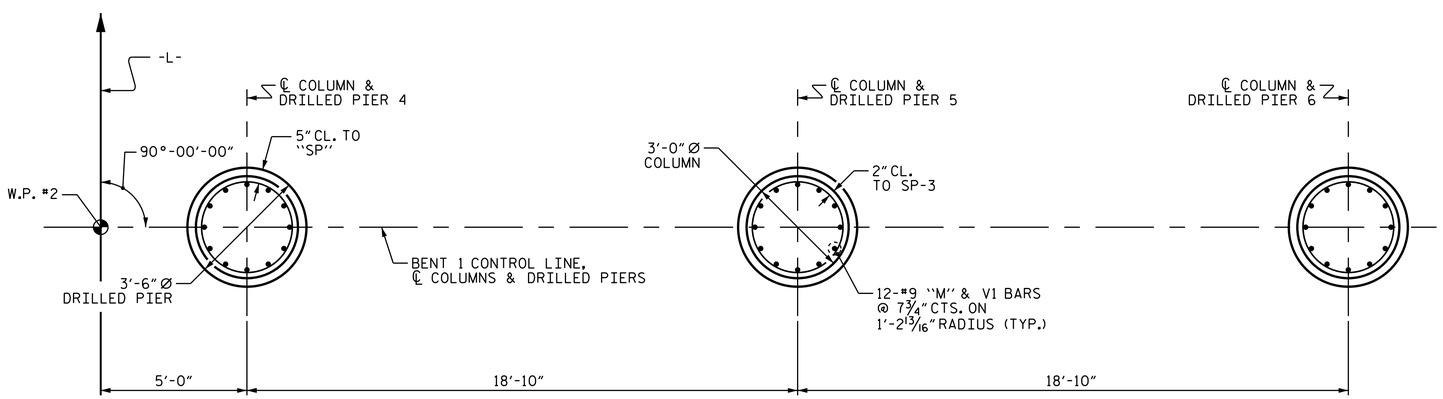

PLAN OF DRILLED PIERS

(REINFORCING STEEL AND DIMENSIONS ARE TYPICAL FOR EACH DRILLED PIER AND COLUMN)

PROJECT NO. U-3615B

GUILFORD COUNTY

STATION: 238+33.00 -L-

SHEET 2 OF 4

STATE OF NORTH CAROLINA
DEPARTMENT OF TRANSPORTATION
RALEIGH

SUBSTRUCTURE

BENT 1

STAGE I

NORTH CAROLINA PROFESSIONAL SEAL 16301 ENGINEER TING HSIUNG FANG

DocuSigned by: Ting H. Fang
E720884009774 35...
12/3/2014

REVISIONS						SHEET NO.
NO.	BY:	DATE:	NO.	BY:	DATE:	S-33
1			3			TOTAL SHEETS
2			4			91

DRAWN BY : QT NGUYEN DATE : 9/10
CHECKED BY : E.C. LOCKLER DATE : 10/10
DESIGN ENGINEER OF RECORD: E. I. OMILE DATE : 1-7-14

03-DEC-2014 11:04
K:\TIPProjects-U\U3615b\Structures\Plans\str1\FinalPlans\U3615B_SD_B*.dgn
ttfang