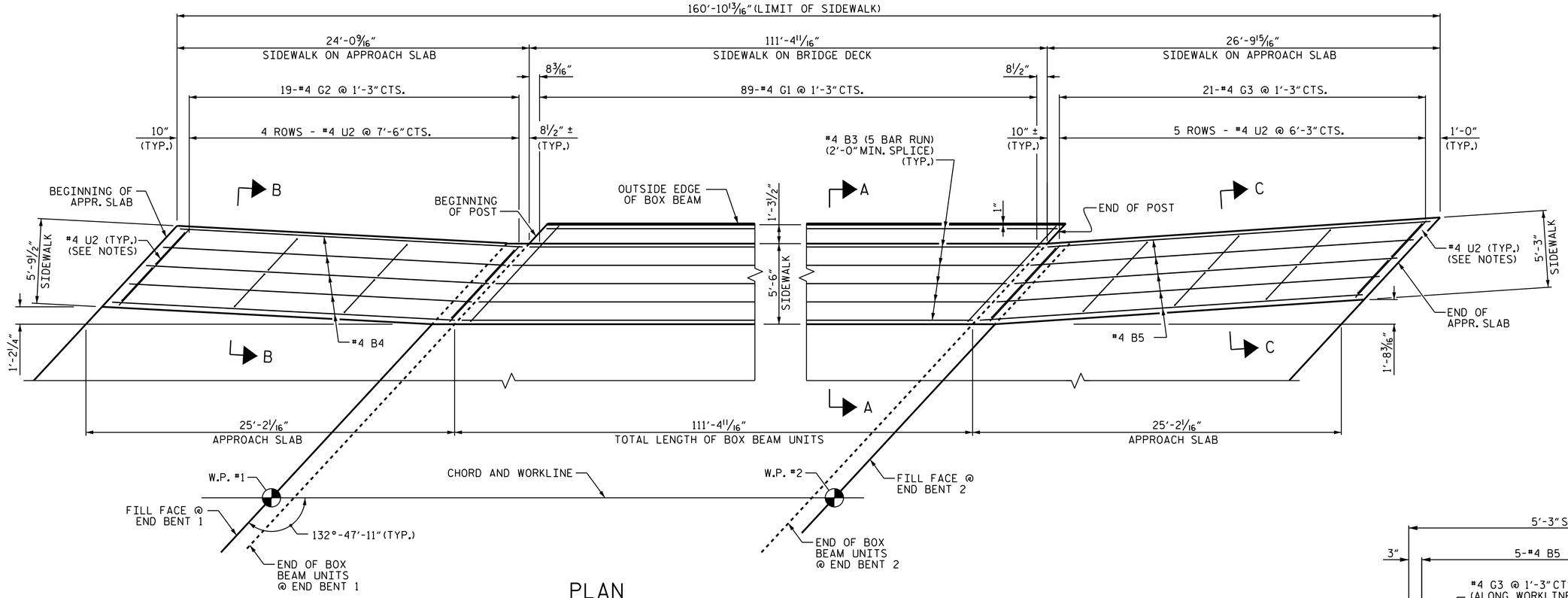

PLAN

ALL LONGITUDINAL DIMENSIONS ARE MEASURED ALONG WORKLINE.

BILL OF MATERIAL

BAR	NO.	SIZE	TYPE	LENGTH	WEIGHT
✱ B3	30	#4	STR	23'-8"	474
✱ B4	5	#4	STR	24'-7"	164
✱ B5	5	#4	STR	26'-3"	175
✱ G1	89	#4	STR	8'-6"	505
✱ G2	19	#4	STR	7'-1"	90
✱ G3	21	#4	STR	6'-3"	88
✱ U2	18	#4	1	4'-4"	52

✱ EPOXY COATED REINF. STEEL 1,594 LBS

CLASS AA CONCRETE 41.2 C. Y.

BAR TYPE

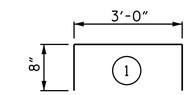

BAR DIMENSIONS ARE OUT TO OUT

NOTES:

ALL REINFORCING STEEL IN THE SIDEWALK SHALL BE EPOXY COATED.

GROOVED CONTRACTION JOINTS, 1/2" IN DEPTH, SHALL BE TOOLED IN ALL EXPOSED FACES OF THE SIDEWALK IN ACCORDANCE WITH ARTICLE 825-10(B) OF THE STANDARD SPECIFICATIONS, EXCEPT THAT THE CONTRACTION JOINTS SHALL BE ORIENTED ALONG THE SKEW. THE CONTRACTION JOINT SHALL BE LOCATED AT A SPACING OF 8 TO 10 FT. IN ADDITION, A CONTRACTION JOINT SHALL BE LOCATED AT THE CONSTRUCTION OR PERMITTED JOINT AT THE END BENTS AND ALONG THE BENT CONTROL LINES. NO CONTRACTION JOINT WILL BE REQUIRED FOR SEGMENTS LESS THAN 10 FEET IN LENGTH.

PAYMENT FOR SIDEWALK SHALL BE INCLUDED IN THE PAY ITEMS IN THE "TOTAL OF BILL OF MATERIAL" FOR CLASS AA CONCRETE AND EPOXY COATED REINFORCING STEEL.

✱✱ THE #4 U2 BARS MAY BE PUSHED INTO GREEN CONCRETE AFTER APPROACH SLAB HAS BEEN SCREEDED OFF.

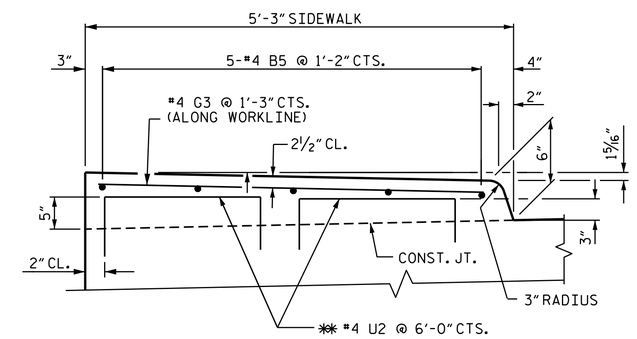

SECTION C-C

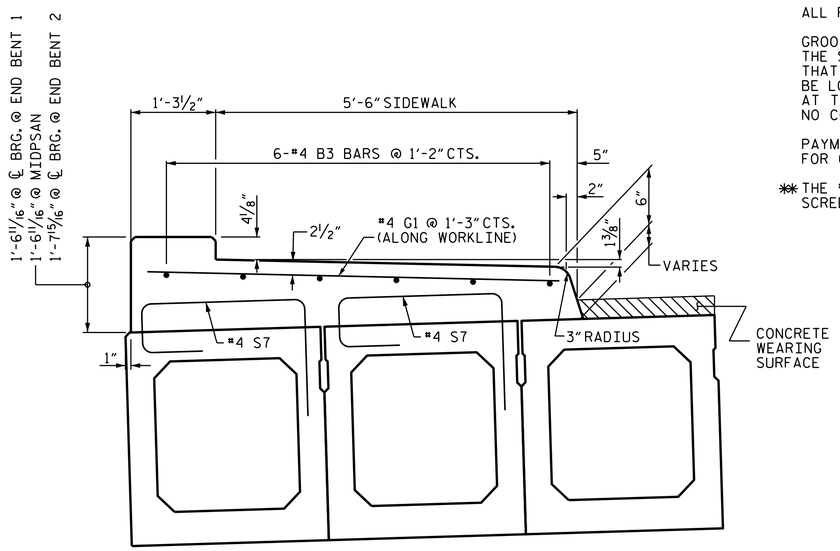

SECTION A-A

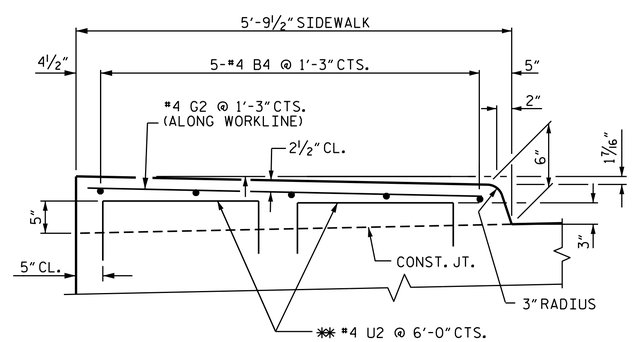

SECTION B-B

PROJECT NO. U-3615B

GUILFORD COUNTY

STATION: 233+87.56 -L-

STATE OF NORTH CAROLINA
DEPARTMENT OF TRANSPORTATION
RALEIGH

SUPERSTRUCTURE

SIDEWALK DETAILS

LEFT LANE

NORTH CAROLINA PROFESSIONAL SEAL 16301 ENGINEER TING HSIUNG FANG

DocuSigned by: Ting H. Fang E7208840097435...

12/3/2014

REVISIONS							SHEET NO.
NO.	BY:	DATE:	NO.	BY:	DATE:		S-56
1			3				TOTAL SHEETS
2			4				91

STR. #2

DRAWN BY :	P. K. NEWTON	DATE :	11/6/14
CHECKED BY :	T. H. FANG	DATE :	11/10/14
DESIGN ENGINEER OF RECORD:	T. H. FANG	DATE :	11/12/14

03-DEC-2014 11:41
K:\TIPProjects-U\U3615b\Structures\Plans\Str2\Finalplans\u3615b2_sd_sw.dgn
ttfang