DocuSign Envelope ID: F68F4E35-E0B7-4828-B448-2CD19804A9AE

PROJ. REFERENCE NO.	SHEET NO.
U-3615B	TMP-5C

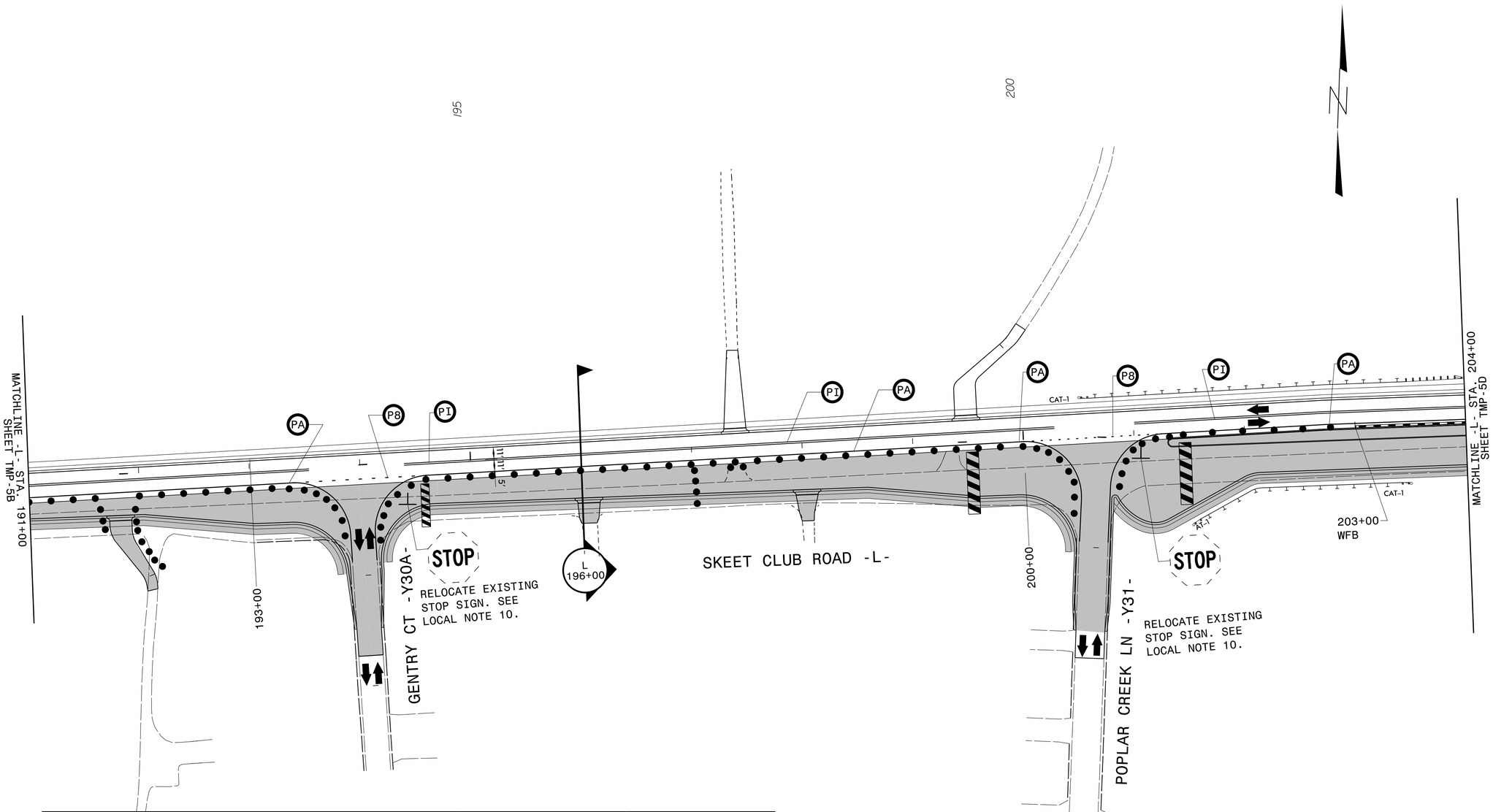

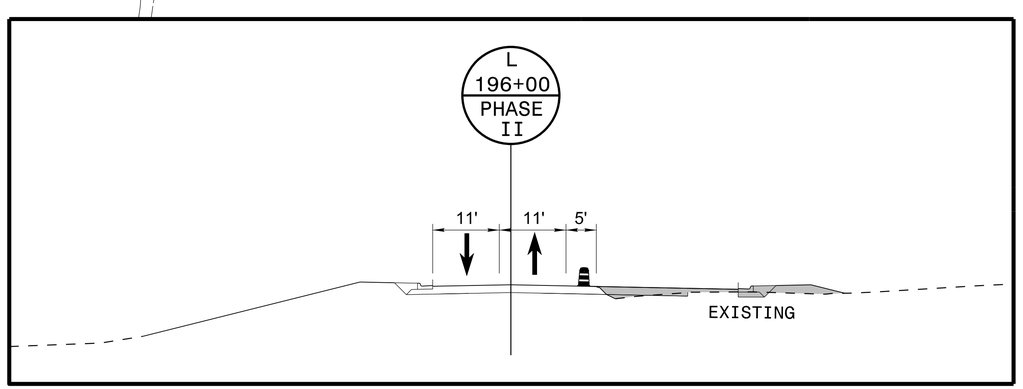

Stantec

Stantec Consulting Services Inc.
801 Jones Franklin Road-Suite 300
Raleigh, NC 27606
Tel. (919) 851-6866
Fax. (919) 851-7024
www.stantec.com
License No. F-0672

APPROVED: Betsy L. Watson DATE: 9/29/2014

SEAL

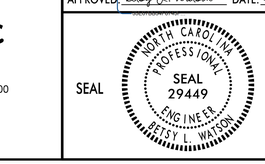

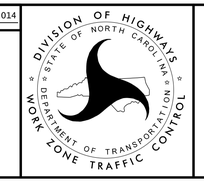

PHASE II

9/26/2014
U:\U3615B\Traffic\TrafficControl\TCP\Plan_Sheets\U-3615B_TC_TMP_05c.dgn
rcullen