DocuSign Envelope ID: F68F4E35-E0B7-4828-B448-2CD19804A9AE

PROJ. REFERENCE NO.	SHEET NO.
U-3615B	TMP-6M

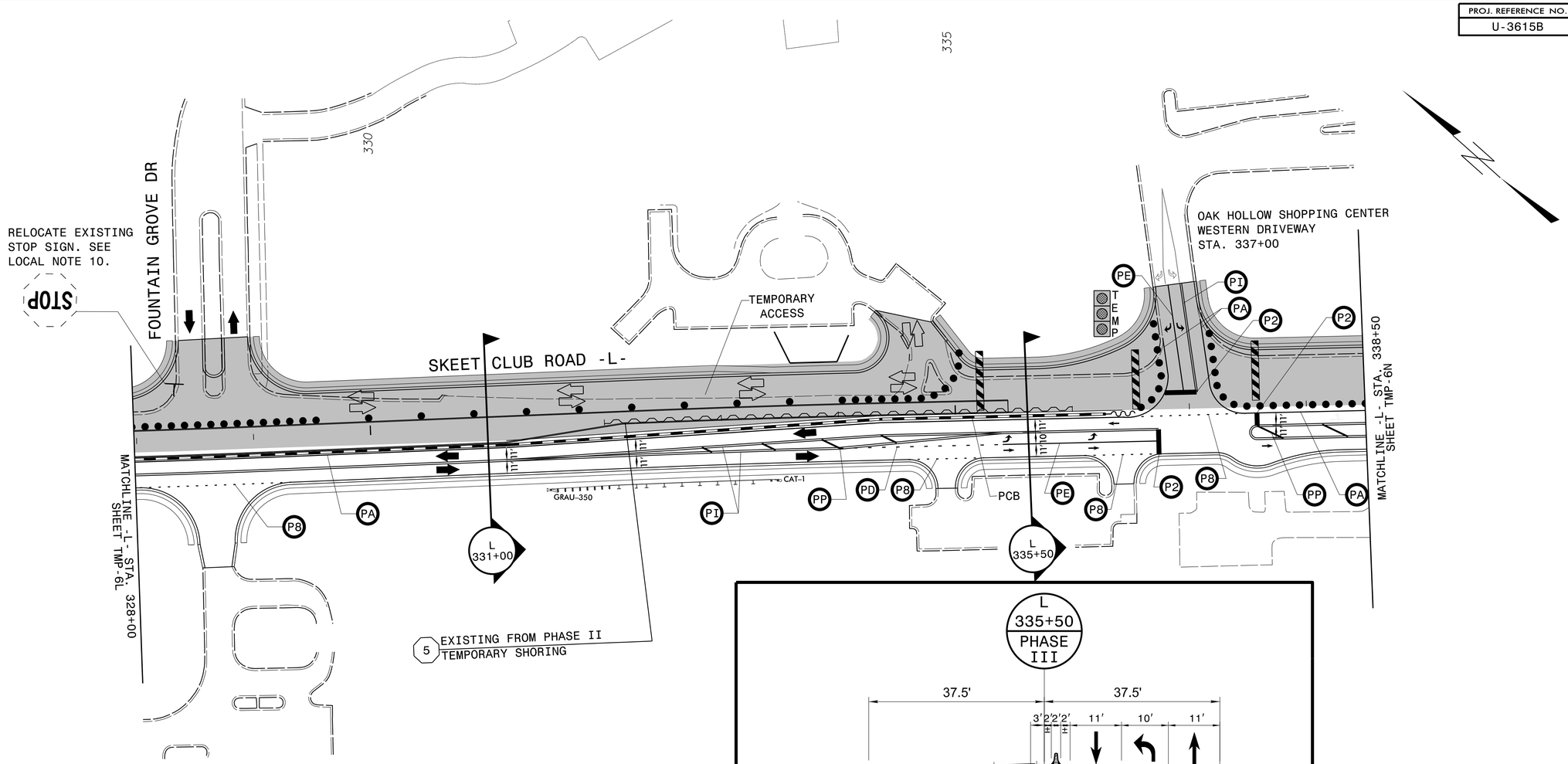

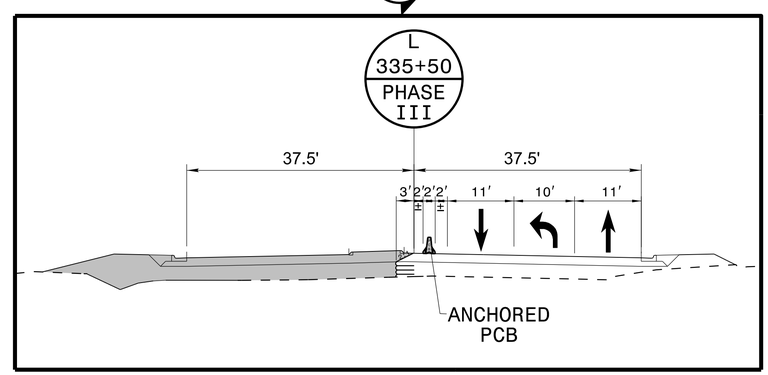

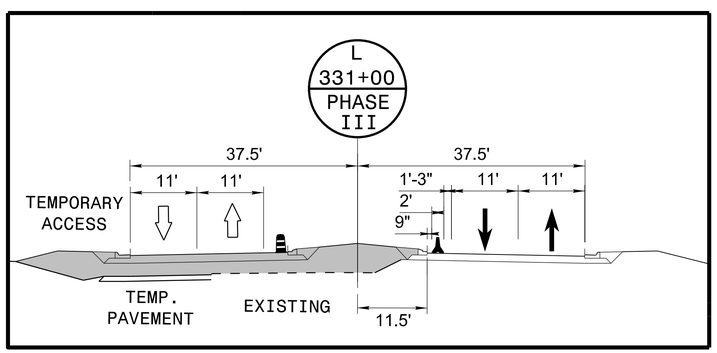

Stantec
Stantec Consulting Services Inc.
801 Jones Franklin Road-Suite 300
Raleigh, NC 27606
Tel. (919) 851-6866
Fax. (919) 851-7024
www.stantec.com
License No. F-0672

APPROVED: Betsy L. Watson DATE: 9/29/2014

SEAL

NORTH CAROLINA PROFESSIONAL SEAL 29449 ENGINEER BETSY L. WATSON

DIVISION OF HIGHWAYS STATE OF NORTH CAROLINA DEPARTMENT OF TRANSPORTATION WORK ZONE TRAFFIC CONTROL

PHASE III

9/26/2014
U:\U3615B\Traffic\TrafficControl\TCP\Plan_Sheets\U-3615B_TC_TMP_06M.dgn
rcullen