| PROJECT REFERENCE NO. | SHEET NO. |
|---|---|
| U-3615B | NS-7 |
| R/W SHEET NO. | |

HYDRAULICS ENGINEER
NORTH CAROLINA PROFESSIONAL SEAL 012575 ENGINEER Paul F. Fisher
1/6/2015
DocuSigned by: Paul Fisher
E3434BA8B9BA4FC...

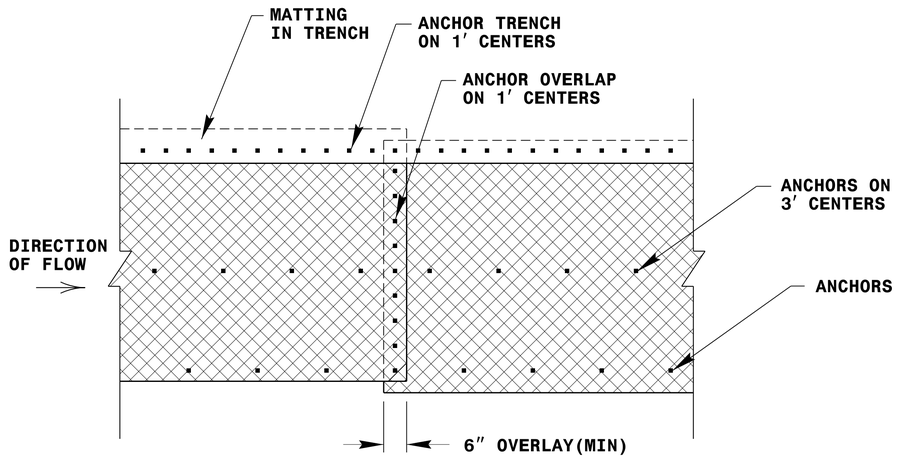


## PLAN VIEW

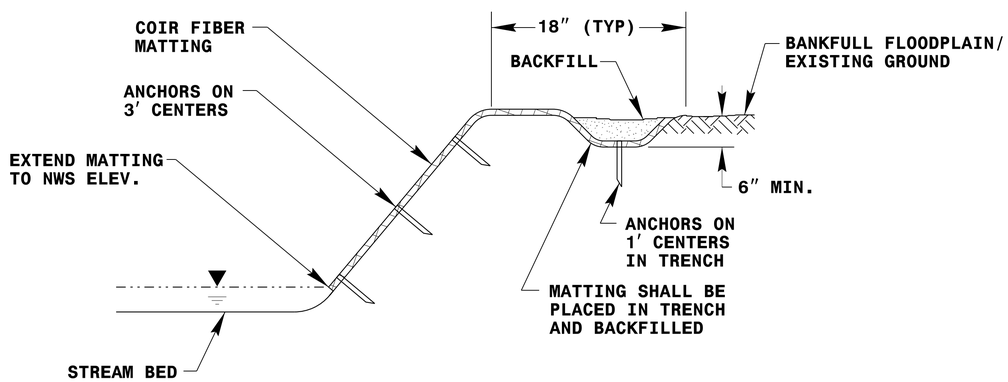


## TYPICAL CROSS SECTION

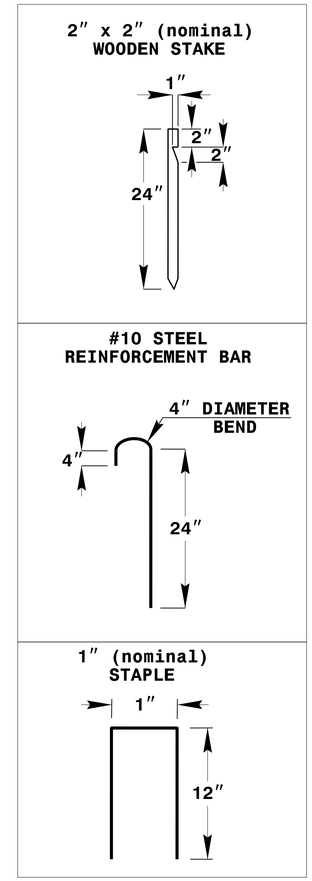


## ANCHOR OPTIONS

| ESTIMATED QUANTITIES | |
|---|---|
| REACH | COIR FIBER MATTING |
| 1 | 900 S.Y. |
| 2 | 1400 S.Y. |
| TOTAL | 2300 S.Y. |

NOTES:
1. IN AREAS TO BE MATTED, ALL SEEDING, SOIL AMENDMENTS, AND SOIL PREPARATION MUST BE COMPLETED IN ACCORDANCE WITH THE PROJECT SPECIFICATIONS PRIOR TO PLACEMENT OF COIR FIBER MATTING.
2. REBAR OR STAPLES MAY BE USED IN PLACE OF WOODEN STAKES AS DIRECTED BY THE ENGINEER.

# COIR FIBER MATTING DETAIL

NOT TO SCALE

NATURAL STREAM DESIGN
COIR FIBER MATTING DETAIL

5/14/99
06-JAN-2015 07:04
S:\Hydraulics\Hydro_Design 2014\ns-3_to_ns-10 2014.dgn