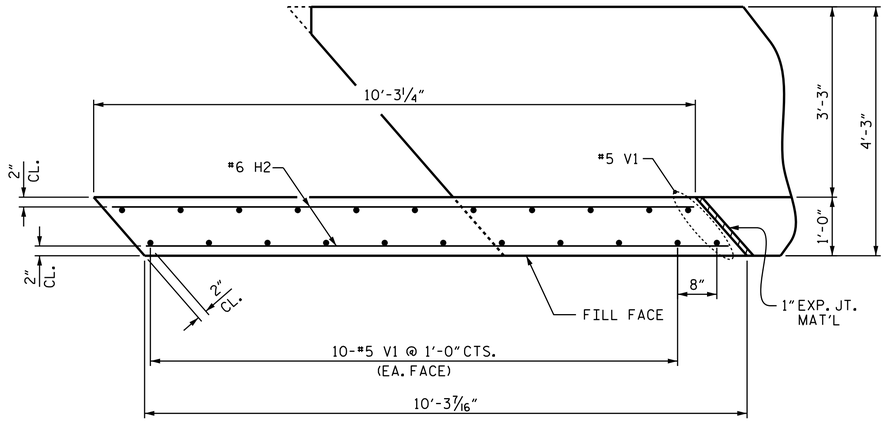

PLAN OF WING (W1)

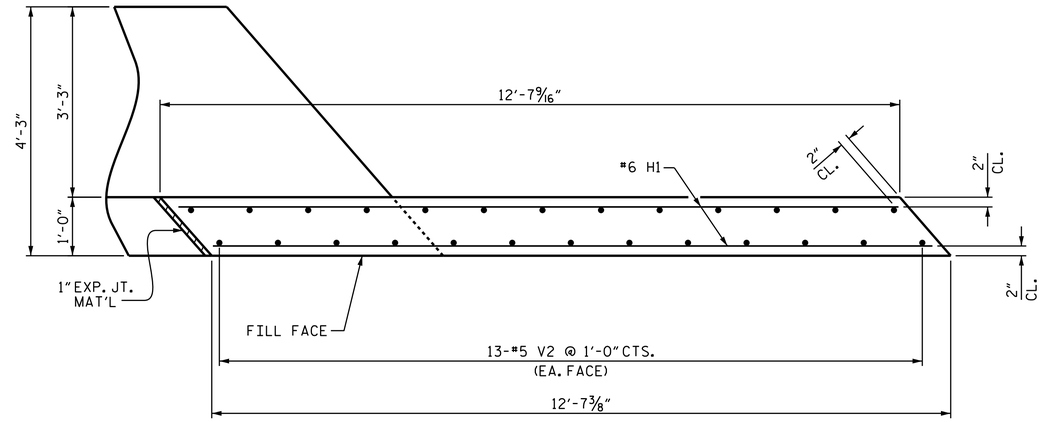

PLAN OF WING (W2)

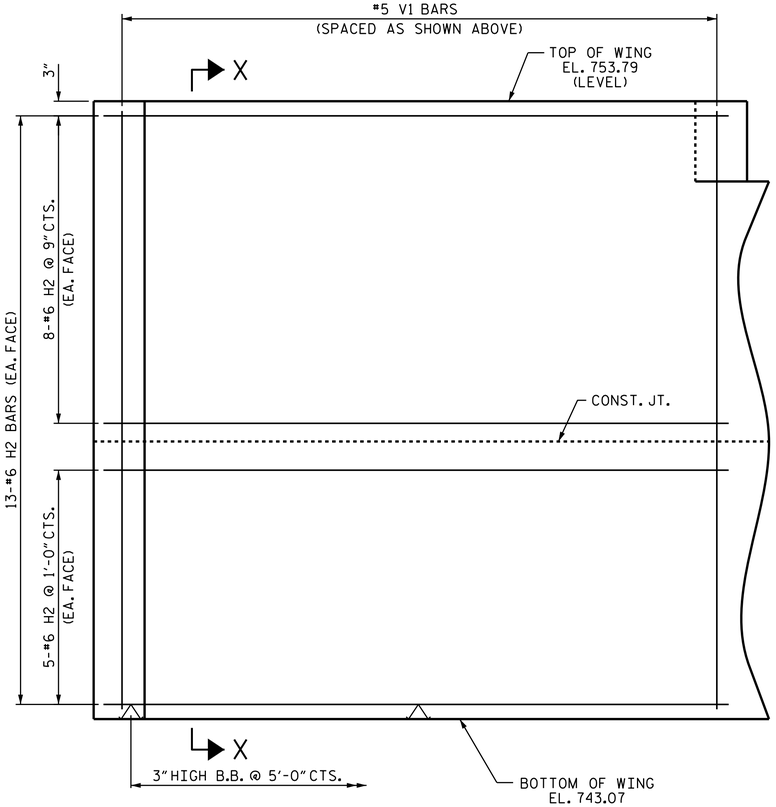

ELEVATION OF WING (W1)

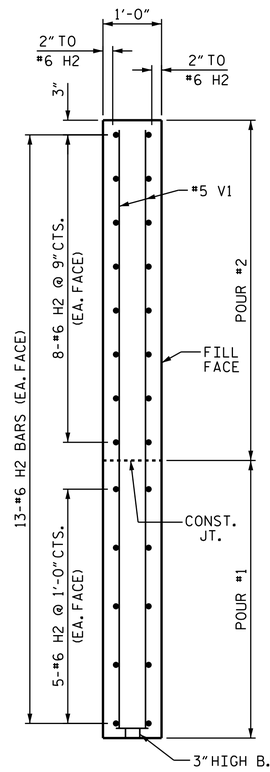

SECTION X-X

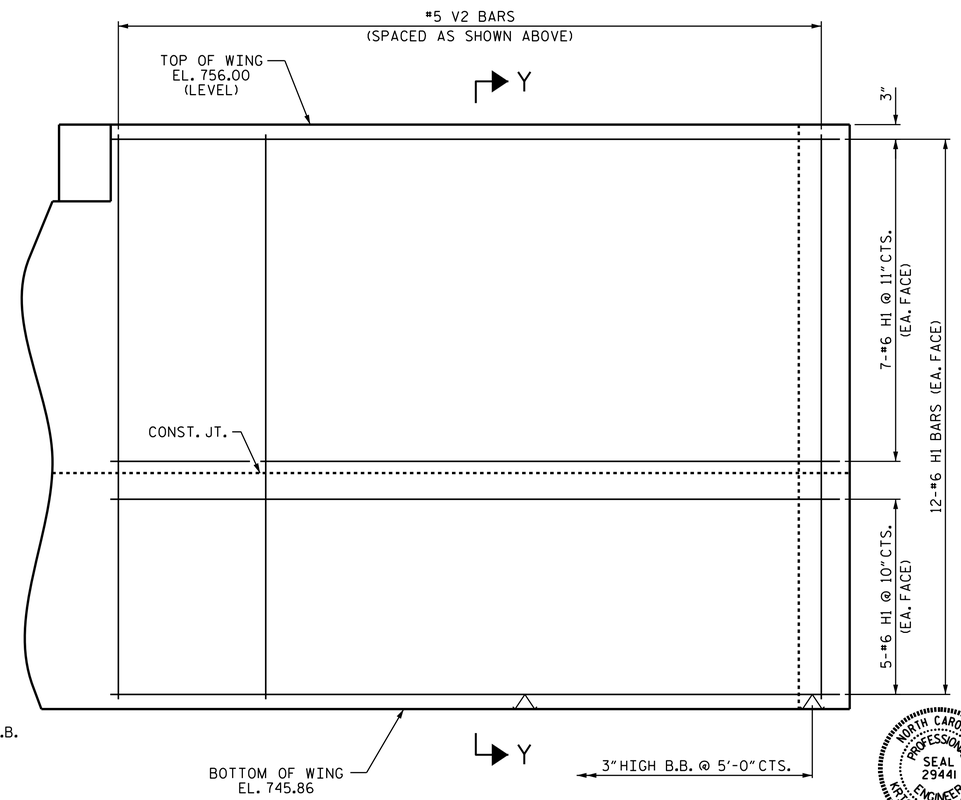

ELEVATION OF WING (W2)

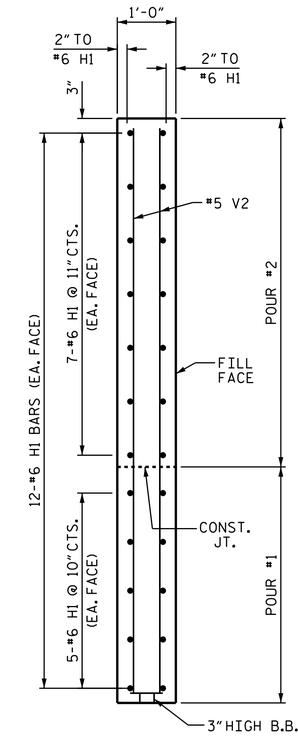

SECTION Y-Y

PROJECT NO. B-5119

GUILFORD COUNTY

STATION: 12+32.31 -RP-

SHEET 2 OF 3

STATE OF NORTH CAROLINA
DEPARTMENT OF TRANSPORTATION
RALEIGH

SUBSTRUCTURE

END BENT 1

NORTH CAROLINA PROFESSIONAL SEAL 29441 ENGINEER KRISTY W. ALFORD

DocuSigned by: F245838930BF40E...

11/25/2014

REVISIONS						SHEET NO.
NO.	BY:	DATE:	NO.	BY:	DATE:	S-68
1			3			TOTAL SHEETS
2			4			77

DRAWN BY : J.P. ADAMS DATE : 10/2014
CHECKED BY : D.R. SHACKELFORD DATE : 10/2014
DESIGN ENGINEER OF RECORD: R.L. CHESSON DATE : 11/04/14

25-NOV-2014 10:59
T:\Structures\Plans\New Plans\B-5119_SD_E*.dgn
jpadams