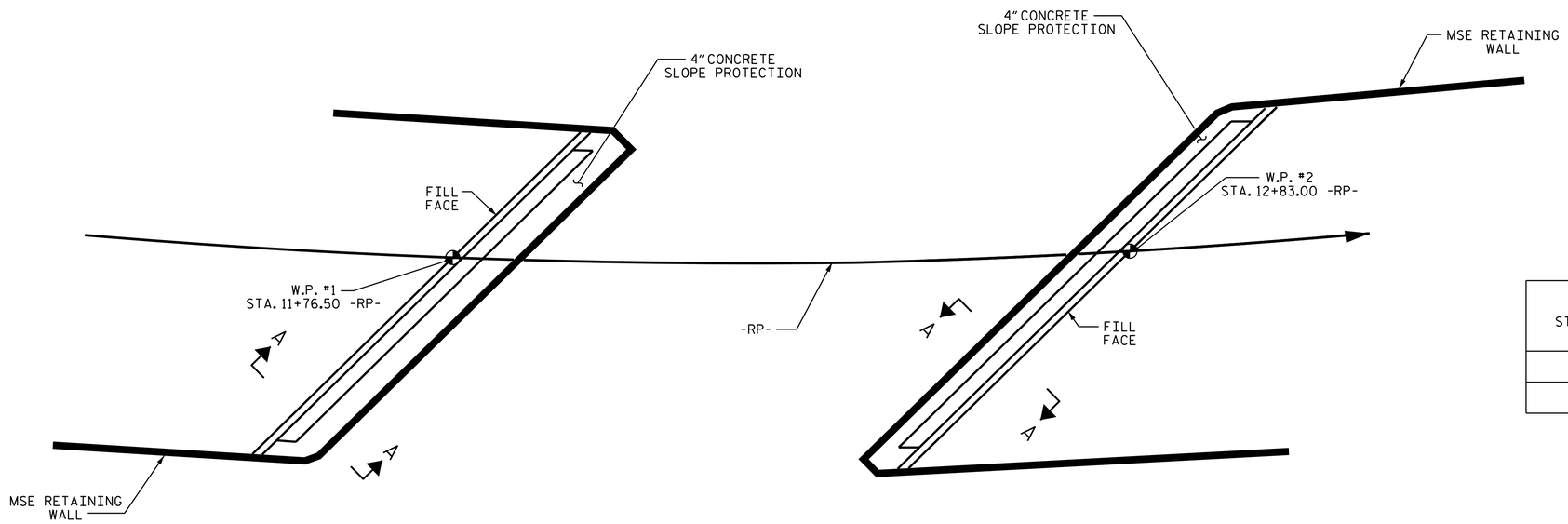

PLAN

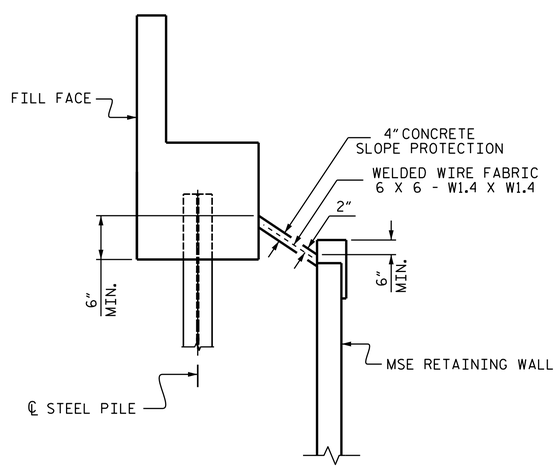

SECTION A-A

NOTES

SLOPE PROTECTION SHALL BE PLACED UNDER THE ENDS OF THE BRIDGE AS SHOWN IN THE DETAILS. MEASUREMENT AND PAYMENT SHALL BE AS PRESCRIBED IN SECTION 462 OF THE STANDARD SPECIFICATIONS.

SLOPE PROTECTION SHALL CONSIST OF 4" POURED-IN-PLACE CONCRETE PAVING AS SHOWN IN THE DETAILS ON THIS SHEET. CONCRETE SHALL BE CLASS "B". THE CONCRETE SURFACE SHALL BE FINISHED TO THE SATISFACTION OF THE ENGINEER. WELDED WIRE FABRIC REINFORCING SHALL BE 6 X 6 - W1.4 X W1.4. 20" WIDE. THE COST OF THE WELDED WIRE FABRIC SHALL BE INCLUDED IN THE CONTRACT UNIT PRICE BID PER QUARE YARD FOR SLOPE PROTECTION.

BRIDGE @ STA. 12+32.31 -RP-	4" SLOPE PROTECTION	WELDED WIRE FABRIC 20 INCHES WIDE
	SQUARE YARDS	APPROX. L.F.
END BENT 1	29	60
END BENT 2	31	60

PROJECT NO. B-5119
GUILFORD COUNTY
STATION: 12+32.31 -RP-

NORTH CAROLINA PROFESSIONAL SEAL 29441 ENGINEER KRISTY W. ALFORD

DocuSigned by:
F245838930BF40E...
11/25/2014

STATE OF NORTH CAROLINA
DEPARTMENT OF TRANSPORTATION
RALEIGH

SLOPE PROTECTION DETAILS

REVISIONS						
NO.	BY:	DATE:	NO.	BY:	DATE:	
1			3			
2			4			

SHEET NO. S-73
TOTAL SHEETS 77

DRAWN BY : J.P. ADAMS DATE : 10/2014
CHECKED BY : D.R. SHACKELFORD DATE : 10/2014
DESIGN ENGINEER OF RECORD : R.L. CHESSON DATE : 11/04/14

25-NOV-2014 10:59
T:\Structures\Plans\New Plans\B-5119_SD_SP.dgn
jpadams