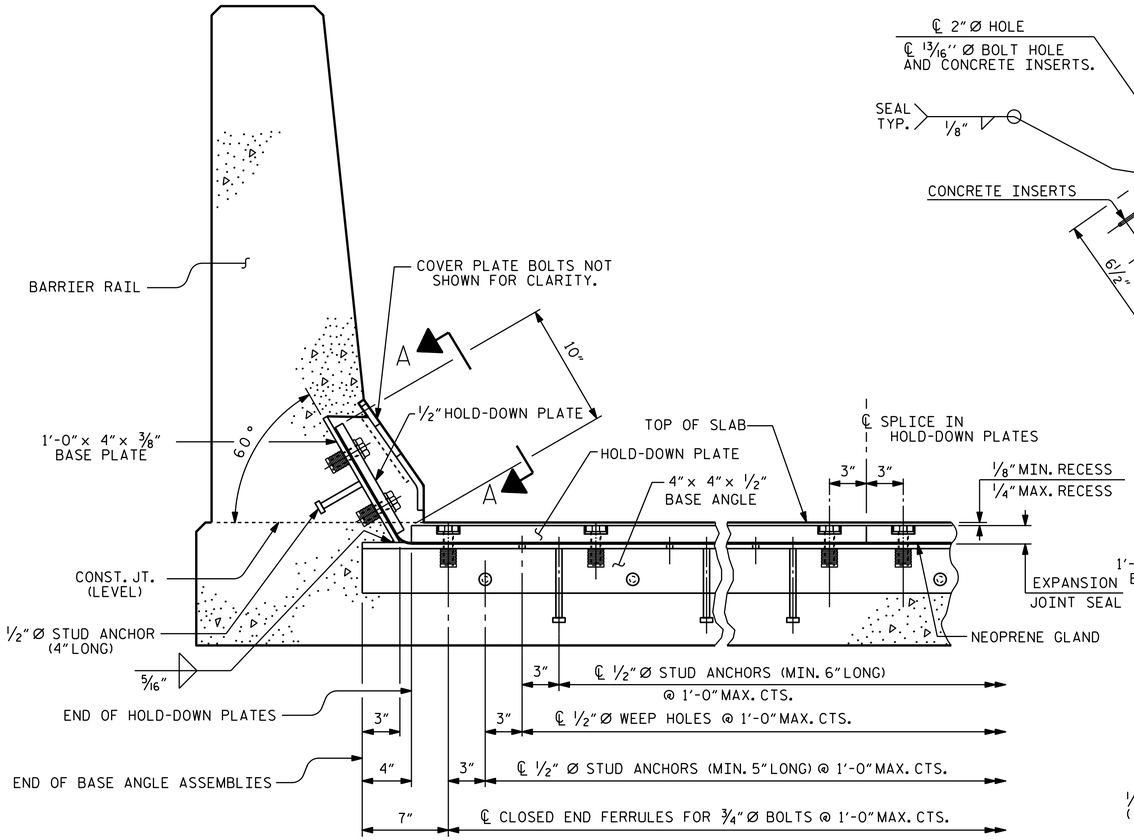

SECTION THRU RAIL NORMAL TO JOINT

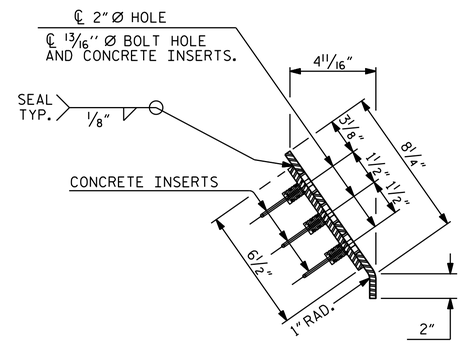

END VIEW

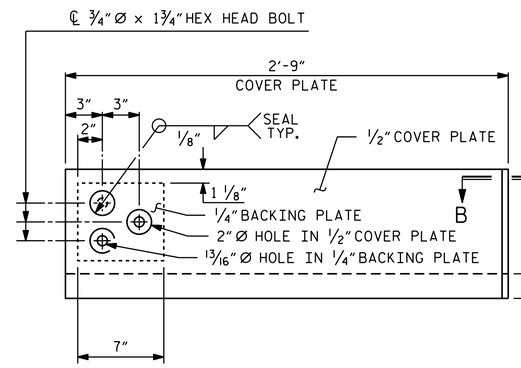

TYPE I - ELEVATION VIEW

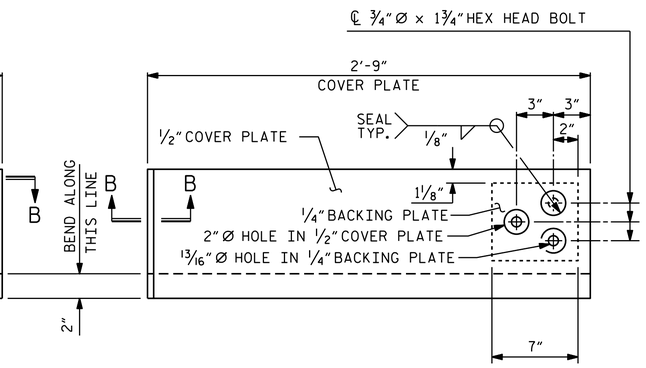

TYPE II - ELEVATION VIEW

COVER PLATE DETAILS

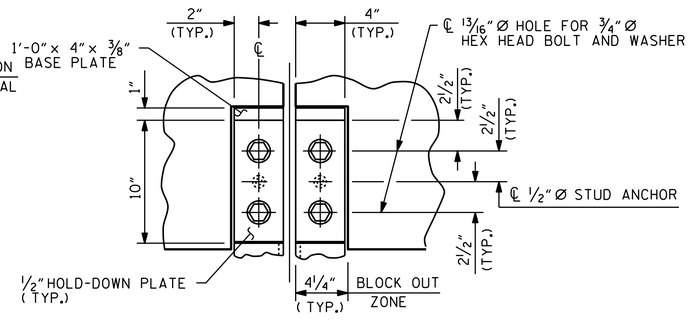

SECTION A-A

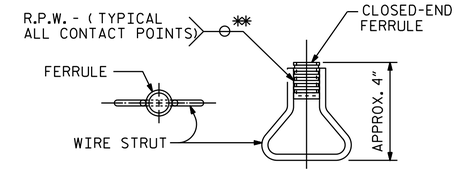

PLAN ELEVATION

CONCRETE INSERT

** EACH WELDED ATTACHMENT OF WIRE TO FERRULE SHALL DEVELOP THE TENSILE STRENGTH OF THE WIRE.

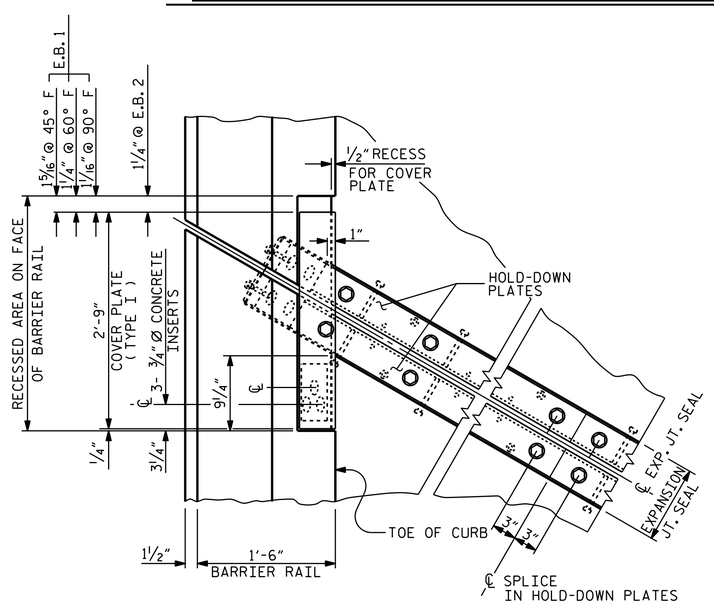

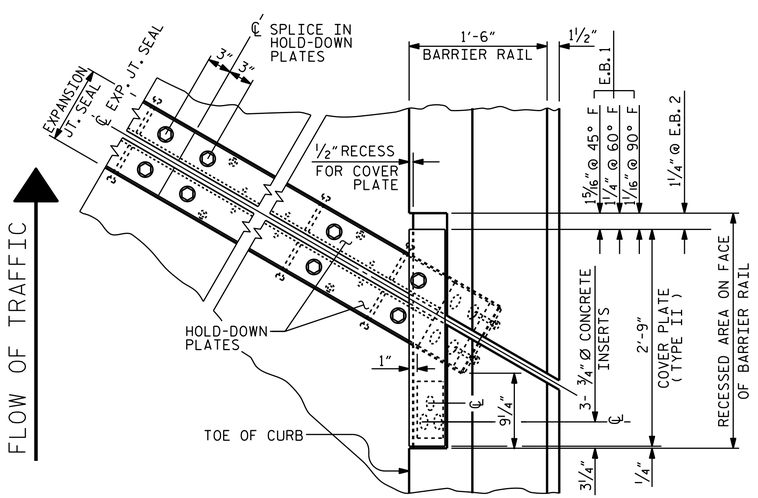

PLAN OF EXPANSION JOINT SEAL

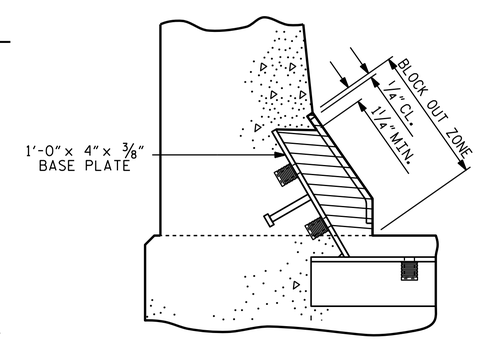

BLOCK OUT DETAIL

SEE "SECTION A-A" FOR OTHER DETAILS.

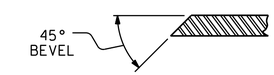

SECTION B-B

PROJECT NO. B-5119

GUILFORD COUNTY

STATION: 12+32.31 -RP-

SHEET 2 OF 2

NORTH CAROLINA PROFESSIONAL SEAL 29441 ENGINEER KRISTY W. ALFORD

DocuSigned by: F245838930BF40E...

11/25/2014

STATE OF NORTH CAROLINA
DEPARTMENT OF TRANSPORTATION
RALEIGH

STANDARD

EXPANSION JOINT SEAL DETAILS FOR BARRIER RAIL

REVISIONS						SHEET NO.
NO.	BY:	DATE:	NO.	BY:	DATE:	S-65
1			3			TOTAL SHEETS
2			4			77

ASSEMBLED BY : J.P. ADAMS		DATE : 9/16/14	
CHECKED BY : D.R. SHACKELFORD		DATE : 10/2014	
DRAWN BY : REK 9/87	REV. 10/1/11	MAA/GM	
CHECKED BY : CRK 10/87	REV. 7/12	MAA/GM	
	REV. 6/13	MAA/GM	

25-NOV-2014 10:59
T:\Structures\Plans\New Plans\B-5119_SD_JS.dgn
jpadams

STD. NO. EJS2 SHT 2b