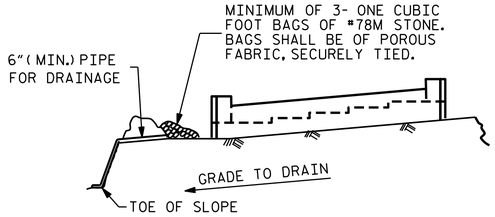

BAGGED STONE AND PIPE SHALL BE PLACED IMMEDIATELY AFTER COMPLETION OF END BENT EXCAVATION. PIPE MAY BE EITHER CONCRETE, CORRUGATED STEEL, CORRUGATED ALUMINUM ALLOY, OR CORRUGATED PLASTIC. PERFORATED PIPE WILL NOT BE ALLOWED.

BAGGED STONE SHALL REMAIN IN PLACE UNTIL THE ENGINEER DIRECTS THAT IT BE REMOVED. THE CONTRACTOR SHALL REMOVE AND DISPOSE OF SILT ACCUMULATIONS AT BAGGED STONE WHEN SO DIRECTED BY THE ENGINEER. BAGS SHALL BE REMOVED AND REPLACED WHENEVER THE ENGINEER DETERMINES THAT THEY HAVE DETERIORATED AND LOST THEIR EFFECTIVENESS.

NO SEPARATE PAYMENT WILL BE MADE FOR THIS WORK AND THE ENTIRE COST OF THIS WORK SHALL BE INCLUDED IN THE UNIT CONTRACT PRICE BID FOR THE SEVERAL PAY ITEMS.

TEMPORARY DRAINAGE AT END BENT

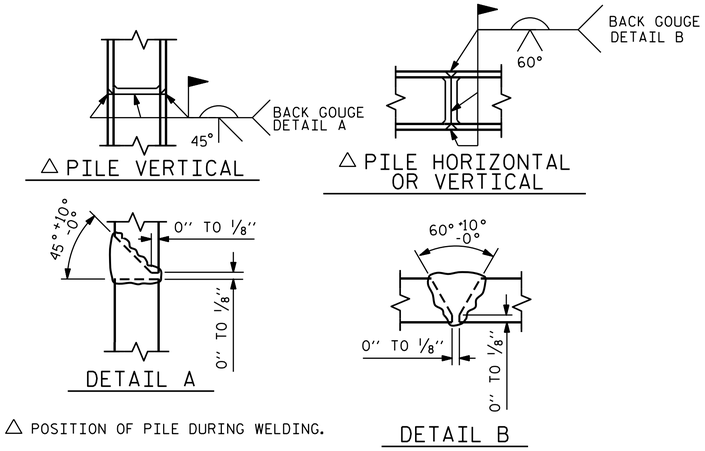

PILE SPLICE DETAILS

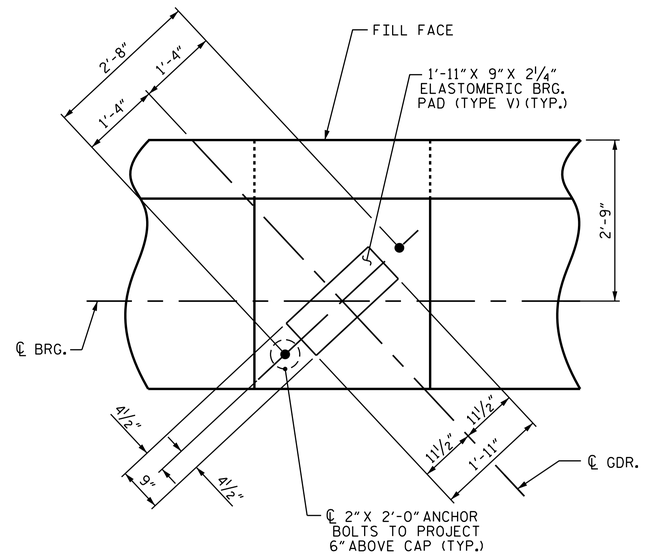

DETAIL "A"

(TYP. EACH GIRDER)

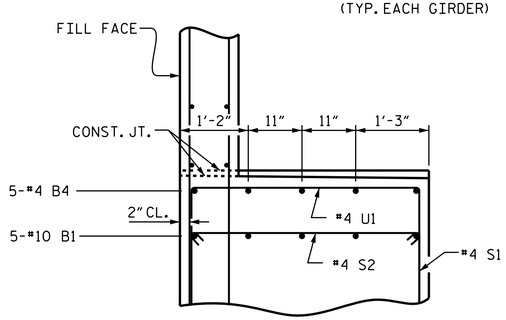

SECTION B-B

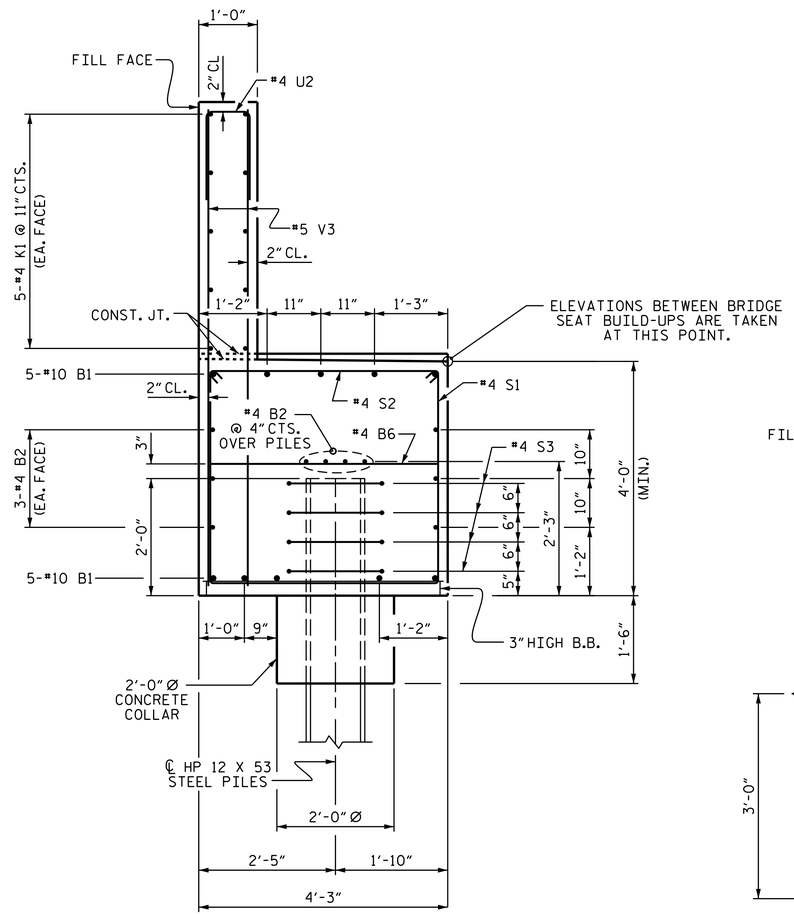

SECTION A-A

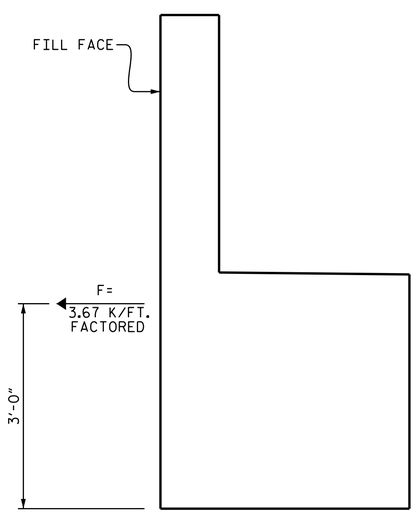

TIEBACK DETAILS

(DETAIL SHOWING TIEBACK RESTRAINT FOR END BENT 2)

BAR TYPES

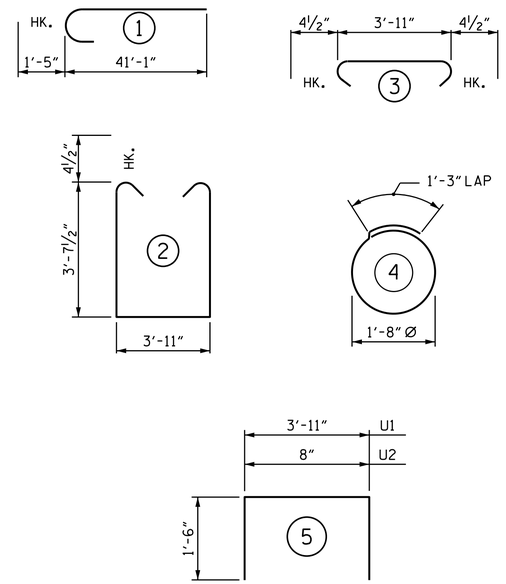

ALL BAR DIMENSIONS ARE OUT TO OUT

BILL OF MATERIAL
END BENT 2

BAR	NO.	SIZE	TYPE	LENGTH	WEIGHT
B1	20	#10	1	42'-6"	3658
B2	30	#4	STR	25'-4"	508
B3	5	#4	STR	20'-0"	67
B4	15	#4	STR	13'-0"	130
B5	5	#4	STR	5'-9"	19
B6	18	#4	STR	3'-11"	47
H1	12	#6	STR	10'-3"	185
H2	24	#6	STR	11'-3"	406
H3	12	#6	STR	11'-1"	200
K1	30	#4	STR	22'-4"	448
S1	119	#4	2	11'-11"	947
S2	119	#4	3	4'-8"	371
S3	40	#4	4	6'-6"	174
U1	38	#4	5	6'-11"	176
U2	63	#4	5	3'-8"	154
V1	26	#5	STR	10'-7"	287
V2	23	#5	STR	9'-11"	238
V3	126	#5	STR	8'-10"	1161
REINFORCING STEEL					9176 LBS.

CLASS A CONCRETE BREAKDOWN

POUR #1 (CAP, LOWER WINGS & CONCRETE COLLARS)	55.1 C.Y.
POUR #2 (BACKWALL & UPPER WINGS)	16.3 C.Y.
TOTAL CLASS A CONCRETE	71.4 C.Y.

HP 12 X 53 STEEL PILES

No. = 10	450 LIN FT.
PILE REDRIVES	10 EA.

NOTES

STIRRUPS IN CAP MAY BE SHIFTED AS NECESSARY TO CLEAR ANCHOR BOLTS.

BACKWALL SHALL BE PLACED BEFORE APPLYING THE EPOXY PROTECTIVE COATING.

THE TOP SURFACE OF THE CAP EXCEPT THE BRIDGE SEAT BUILDUPS SHALL BE SLOPED TRANSVERSELY FROM THE FILL FACE TO THE BACK FACE AT THE RATE OF 2%.

THE TOP SURFACE OF THE END BENT CAP SHALL BE CURED IN ACCORDANCE WITH THE STANDARD SPECIFICATIONS EXCEPT THE MEMBRANE CURING COMPOUND SHALL NOT BE USED.

PROJECT NO. B-5119
GUILFORD COUNTY
STATION: 12+32.31 -RP-

SHEET 3 OF 3

NORTH CAROLINA PROFESSIONAL SEAL 29441 ENGINEER KRISTY W. ALFORD

DocuSigned by: F245838930BF40E...
11/25/2014

STATE OF NORTH CAROLINA
DEPARTMENT OF TRANSPORTATION
RALEIGH

SUBSTRUCTURE

END BENT 2

REVISIONS						SHEET NO.
NO.	BY:	DATE:	NO.	BY:	DATE:	S-72
1			3			TOTAL SHEETS
2			4			77

DRAWN BY : J.P. ADAMS DATE : 10/2014
CHECKED BY : D.R. SHACKELFORD DATE : 10/2014
DESIGN ENGINEER OF RECORD: R.L. CHESSON DATE : 11/04/14

25-NOV-2014 10:59
I:\Structures\Plans\New Plans\B-5119_SD_E*.dgn
jpadams