DocuSign Envelope ID: 15D54574-765E-4509-A721-DEE3FD812A7F

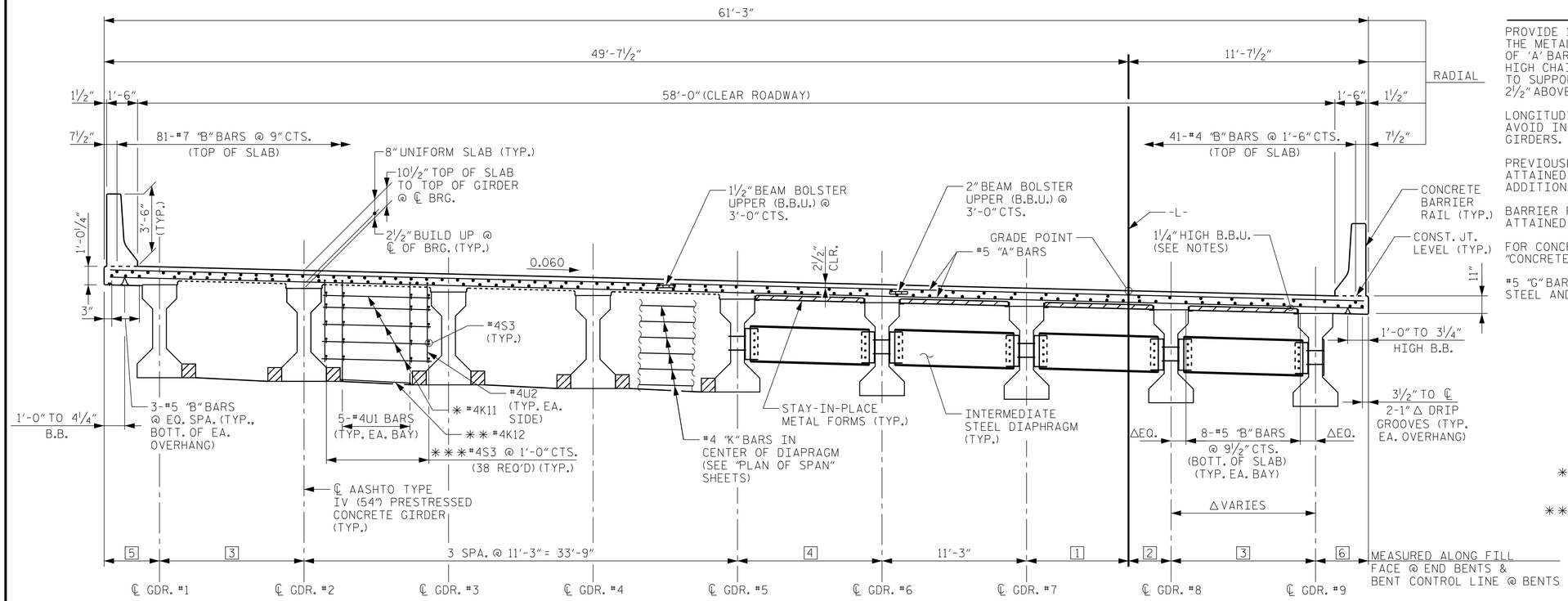

HALF TYPICAL SECTION
(SHOWING CONTINUOUS BENT DIAPHRAGMS)

HALF TYPICAL SECTION
(SHOWING INTERMEDIATE DIAPHRAGMS)

△ NORMAL TO ℄ GIRDER

NOTES

PROVIDE 1¼" HIGH BEAM BOLSTERS UPPER AT 4'-0" CTS. ATOP THE METAL STAY-IN-PLACE FORMS TO SUPPORT THE BOTTOM MAT OF 'A' BARS. WHEN USING REMOVABLE FORMS, PROVIDE CONTINUOUS HIGH CHAIRS FOR METAL DECK (C.H.C.M.) @ 4'-0" CTS. WITH A HEIGHT TO SUPPORT THE BOTTOM MAT OF 'A' BARS A CLEAR DISTANCE OF 2½" ABOVE THE TOP OF THE REMOVABLE FORM.

LONGITUDINAL STEEL MAY BE SHIFTED SLIGHTLY, AS NECESSARY, TO AVOID INTERFERENCE WITH STIRRUPS IN PRESTRESSED CONCRETE GIRDERS.

PREVIOUSLY CAST CONCRETE IN A CONTINUOUS SPAN SHALL HAVE ATTAINED A MINIMUM COMPRESSIVE STRENGTH OF 3,000 PSI BEFORE ADDITIONAL CONCRETE IS CAST IN THE UNIT.

BARRIER RAIL SHALL NOT BE CAST UNTIL ALL SLAB CONCRETE HAS ATTAINED A MINIMUM COMPRESSIVE STRENGTH OF 3,000 PSI.

FOR CONCRETE BARRIER RAIL REINFORCING STEEL DETAILS, SEE "CONCRETE BARRIER RAIL" SHEET.

#5 "G" BARS MAY BE SHIFTED AS NECESSARY TO CLEAR REINFORCING STEEL AND STIRRUPS.

✱ IN BAY BTWN. GDRS. 5 & 6 AT BENT 2 USE #4K14.

✱✱ IN BAY BTWN. GDRS. 5 & 6 AT BENT 2 USE #4K15.

✱✱✱ IN BAY BTWN. GDRS 5 & 6 AT BENT 2 USE 23-#4S3.

DIMENSIONS ALONG FILL FACE OR BENT CONTROL LINE						
	1	2	3	4	5	6
FILL FACE END BENT 1	10'-4 11/16"	10 5/16"	13'-2"	11'-3"	5'-9 7/8"	6'-9 1/8"
BENT 1 CONTROL LINE	9'-0 13/16"	2'-2 3/16"	11'-3"	11'-3"	5'-7 7/16"	6'-5 1/4"
BENT 2 CONTROL LINE	8'-9 7/16"	2'-5 9/16"	11'-3"	7'-11"	3'-6 7/16"	4'-7 13/16"
FILL FACE END BENT 2	8'-0 1/8"	3'-2 7/8"	11'-3"	7'-0"	3'-3 9/16"	3'-4 1/2"

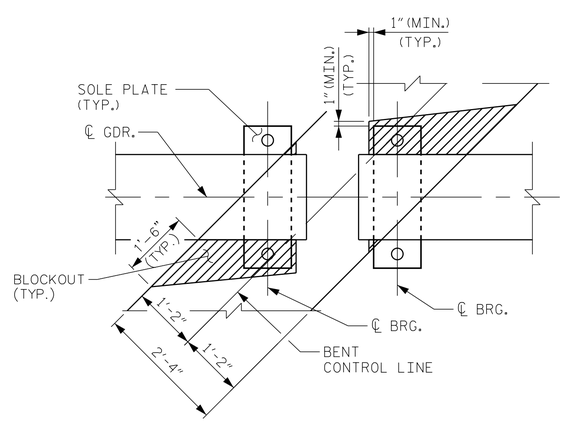

PLAN

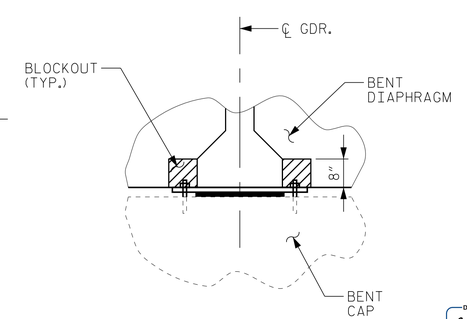

ELEVATION

BENT DIAPHRAGM BLOCKOUT DETAIL

PROJECT NO. B-5119
GUILFORD COUNTY
STATION: 26+31.94 -L-
16+43.93 -Y1-

SHEET 1 OF 2

STATE OF NORTH CAROLINA
DEPARTMENT OF TRANSPORTATION
RALEIGH

SUPERSTRUCTURE
TYPICAL SECTION

NORTH CAROLINA PROFESSIONAL SEAL 12186 ENGINEER CECIL L. NARRON

DocuSigned by: Cecil L. Narron C169A3D64502 4DD... 11/3/2014

Kimley»Horn
333 Fayetteville Street, Suite 600
Raleigh, NC 27601-1772
Phone (919) 835-1494
NC LICENSE # F-0102

This document, together with the concepts and designs presented herein, as an instrument of services, is intended only for the specific purpose and client for which it was prepared. Reuse of and improper reliance of this document without written authorization and adaption by Kimley-Horn and Associates, Inc. shall be without liability to Kimley-Horn and Associates, Inc.

Copyright Kimley-Horn and Associates, Inc., 2014

REVISIONS						SHEET NO.
NO.	BY:	DATE:	NO.	BY:	DATE:	S-6
1			3			TOTAL SHEETS
2			4			77

DRAWN BY: J. I. KIMBLE DATE: 10/14
CHECKED BY: J. C. WILSON DATE: 10/14
DESIGN ENGINEER OF RECORD: C.L. NARRON DATE: 10/14

10/31/2014 K:\RDT_Structures_Bridge\NC\01\036186_B-5119 I40-85 Bridges\Cad\dgn\B-5119_349_S06.dgn