DocuSign Envelope ID: 15D54574-765E-4509-A721-DEE3FD812A7F

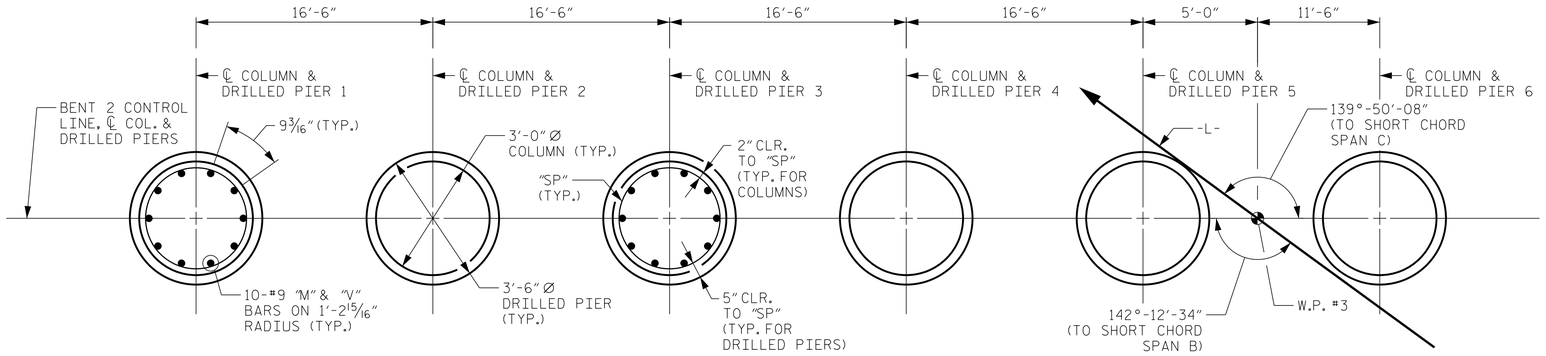

PLAN OF DRILLED PIERS & COLUMNS

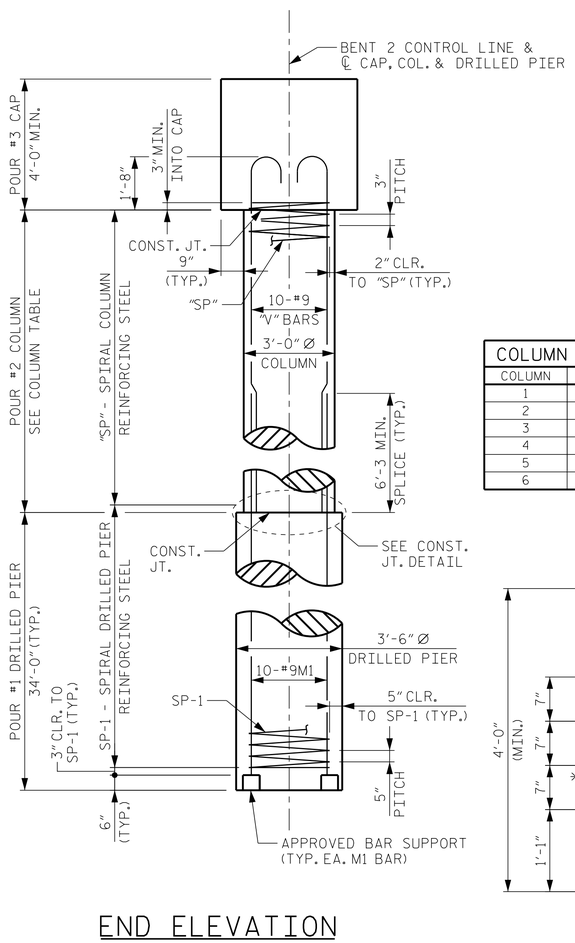

END ELEVATION

COLUMN TABLE	
COLUMN	LENGTH
1	17'-4 7/16"
2	16'-8 5/8"
3	16'-0 13/16"
4	15'-4 15/16"
5	14'-9 1/8"
6	14'-1 5/16"

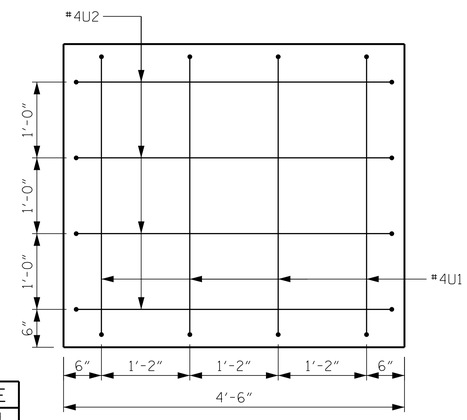

VIEW X-X

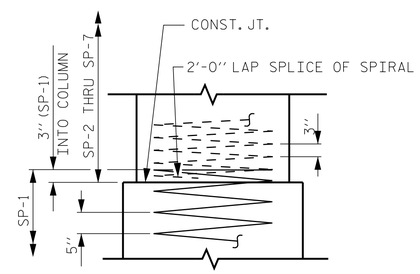

CONSTRUCTION JOINT DETAIL

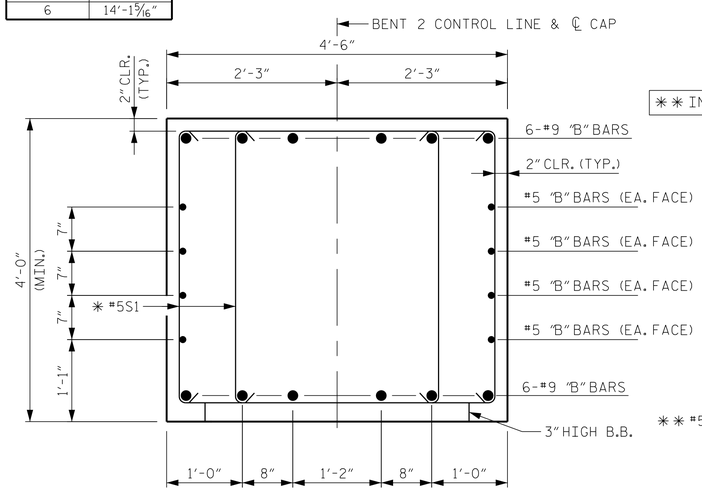

SECTION A-A

** INVERT ALTERNATE STIRRUPS

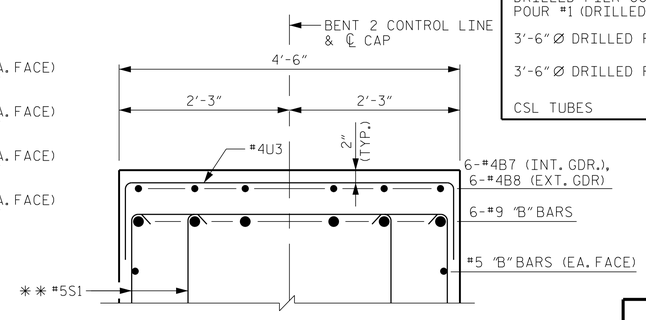

SECTION B-B

BAR TYPES

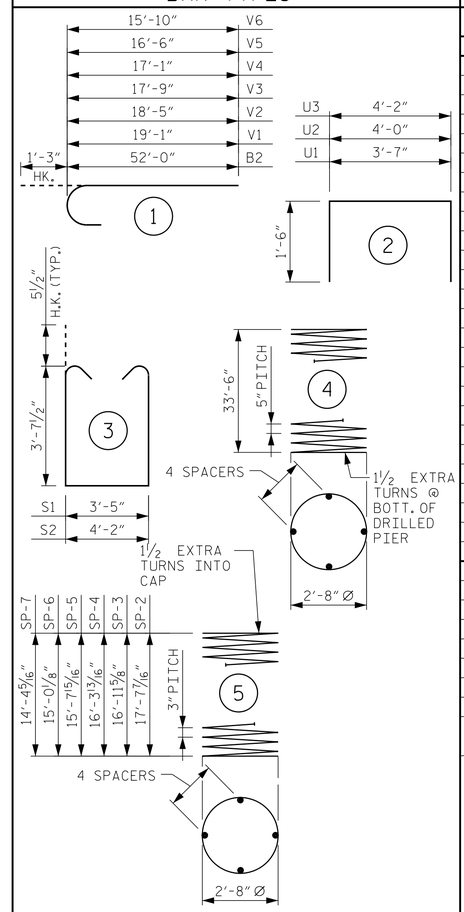

ALL BAR DIMENSIONS ARE OUT TO OUT

BILL OF MATERIAL

BENT 2

BAR	NO.	SIZE	TYPE	LENGTH	WEIGHT
B1	6	9	STR	47'-7"	971
B2	6	9	STR	50'-5"	1,029
B3	6	9	1	51'-4"	1,047
B4	6	9	1	51'-8"	1,054
B5	8	5	STR	44'-4"	370
B6	8	5	STR	50'-5"	421
B7	42	4	STR	4'-2"	117
B8	12	4	STR	4'-8"	37
M1	60	9	STR	42'-9"	8,721
S1	164	5	3	11'-7"	1,981
S2	6	5	3	12'-4"	77
U1	8	4	2	6'-7"	35
U2	8	4	2	7'-0"	37
U3	81	4	2	7'-2"	388
V1	10	9	1	20'-4"	691
V2	10	9	1	19'-8"	669
V3	10	9	1	19'-0"	646
V4	10	9	1	18'-4"	623
V5	10	9	1	17'-9"	604
V6	10	9	1	17'-1"	581
REINFORCING STEEL					20,099 LBS.
SP-1	6	*	4	686'-9"	4,298
SP-2	1	**	5	606'-5"	405
SP-3	1	**	5	585'-9"	391
SP-4	1	**	5	565'-2"	378
SP-5	1	**	5	540'-5"	361
SP-6	1	**	5	519'-9"	347
SP-7	1	**	5	499'-2"	333
SPIRAL COLUMN REINFORCING STEEL (FOR BENT 1)					6,513 LBS.

* THE SP-1 SPIRAL REINFORCING STEEL SHALL BE W31 OR D-31 COLD DRAWN WIRE OR #5 PLAIN OR DEFORMED BAR

** THE SPIRAL REINFORCING STEEL SHALL BE W20 OR D-20 COLD DRAWN WIRE OR #4 PLAIN OR DEFORMED BAR

CLASS A CONCRETE BREAKDOWN (FOR BENT 2)	
POUR #2 (COLUMNS)	24.7 C.Y.
POUR #3A (CAP)	28.2 C.Y.
POUR #3B (CAP)	34.7 C.Y.
TOTAL CLASS A CONCRETE	87.6 C.Y.

DRILLED PIERS: (FOR BENT 2)	
DRILLED PIER CONCRETE POUR #1 (DRILLED PIERS)	72.7 C.Y.
3'-6" Ø DRILLED PIER NOT IN SOIL	32 LIN. FT.
3'-6" Ø DRILLED PIER IN SOIL	172 LIN. FT.
CSL TUBES	852 LIN. FT.

PROJECT NO. B-5119

GUILFORD COUNTY

STATION: 26+31.94 -L-
16+43.93 -Y1-

SHEET 3 OF 3

NORTH CAROLINA PROFESSIONAL SEAL 12186 ENGINEER CECIL L. NARRON

DocuSigned by: Cecil L. Narron C169A3D64502 4DD... 11/3/2014

STATE OF NORTH CAROLINA
DEPARTMENT OF TRANSPORTATION
RALEIGH

SUBSTRUCTURE

BENT 2

Kimley»Horn
333 Fayetteville Street, Suite 600
Raleigh, NC 27601-1772
Phone (919) 835-1494
NC LICENSE # F-0102

This document, together with the concepts and designs presented herein, as an instrument of service, is intended only for the specific purpose and client for which it was prepared. Reuse of and improper reliance on this document without written authorization and adoption by Kimley-Horn and Associates, Inc. shall be without liability to Kimley-Horn and Associates, Inc.

Copyright Kimley-Horn and Associates, Inc., 2014

REVISIONS						SHEET NO.
NO.	BY:	DATE:	NO.	BY:	DATE:	S-38
1			3			TOTAL SHEETS
2			4			77

DRAWN BY: J. I. KIMBLE DATE: 10/14
CHECKED BY: J. C. WILSON DATE: 10/14
DESIGN ENGINEER OF RECORD: C.L. NARRON DATE: 10/14

10/31/2014 K:\RDT_Structures_Bridge\NC\01\036186_B-5119 I40-85 Bridges\Cad\dgn\B-5119_349_S38.dgn