DocuSign Envelope ID: 15D54574-765E-4509-A721-DEE3FD812A7F

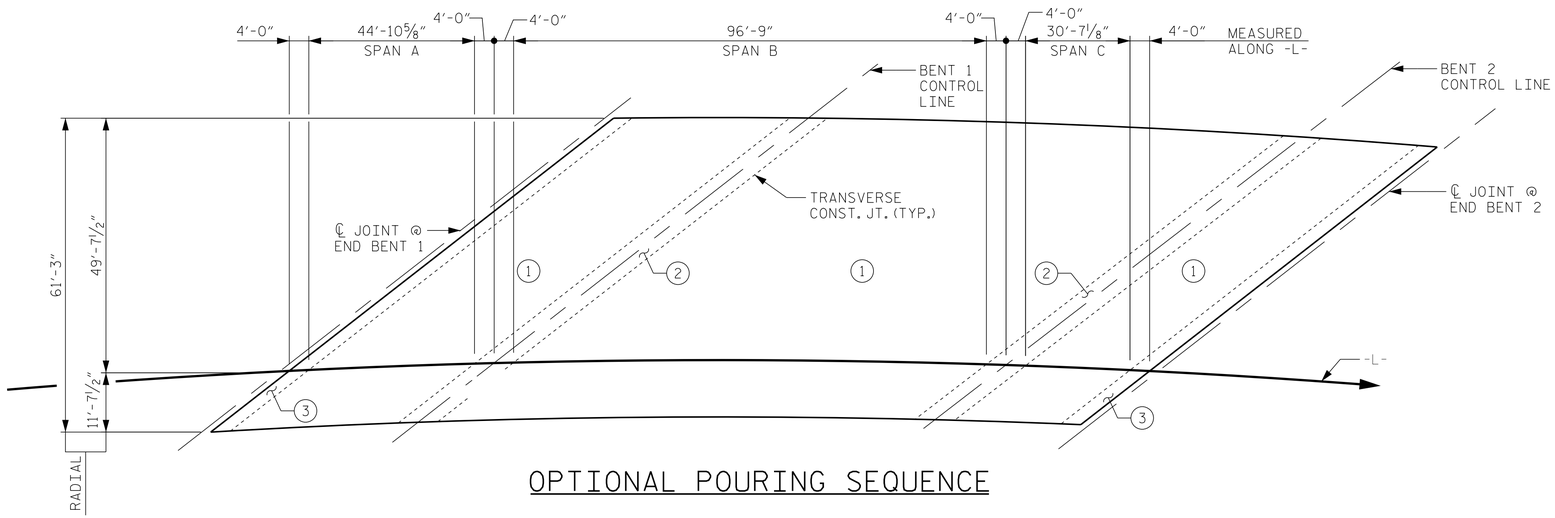

OPTIONAL POURING SEQUENCE

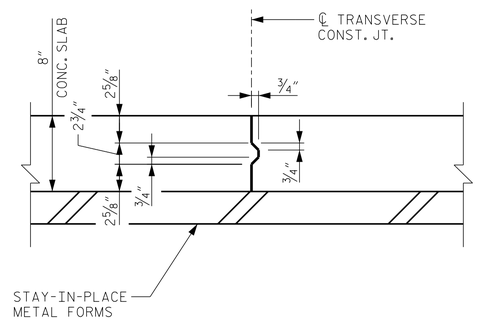

TRANSVERSE CONSTRUCTION JOINT

REINFORCING STEEL IN SLAB NOT SHOWN. LONGITUDINAL STEEL SHALL BE CONTINUOUS THROUGH JOINT.

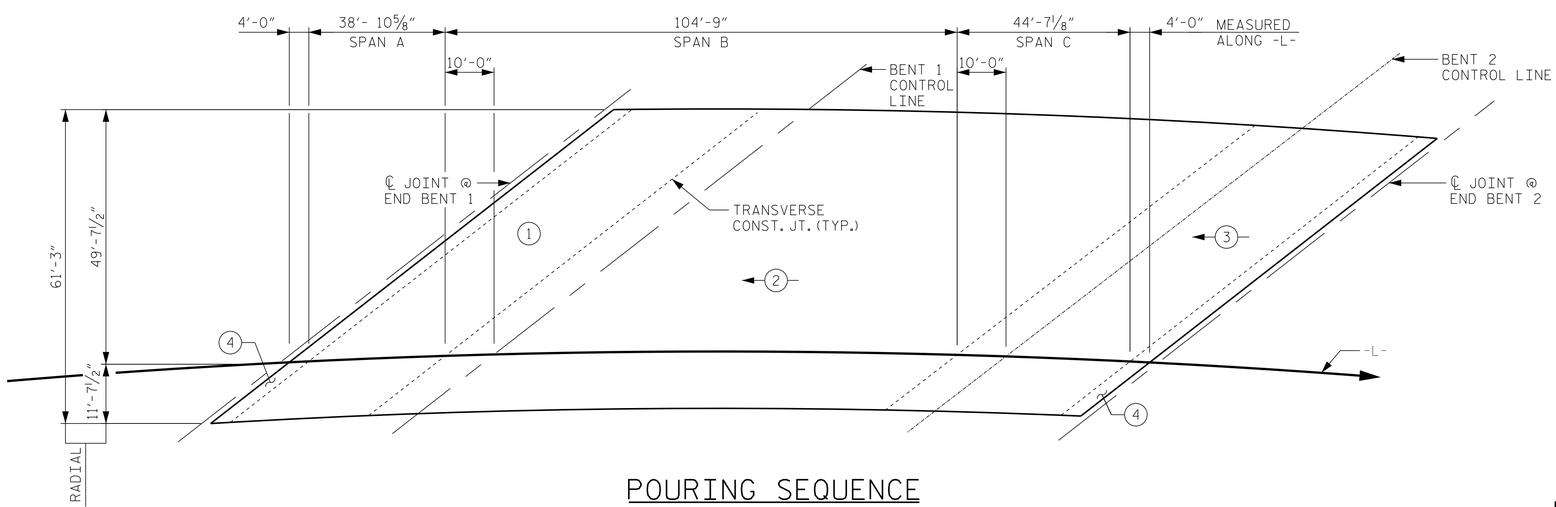

POURING SEQUENCE

(#) INDICATES POUR NUMBER AND DIRECTION

PROJECT NO. B-5119

GUILFORD COUNTY

STATION: 26+31.94 -L-
16+43.93 -Y1-

NORTH CAROLINA PROFESSIONAL SEAL 12186 ENGINEER CECIL L. NARRON

DocuSigned by: Cecil L. Narron C169A3D64502 4D0... 11/3/2014

STATE OF NORTH CAROLINA
DEPARTMENT OF TRANSPORTATION
RALEIGH

SUPERSTRUCTURE

POURING SEQUENCE

Kimley»Horn
333 Fayetteville Street, Suite 600
Raleigh, NC 27601-1772
Phone (919) 835-1494
NC LICENSE # F-0102

This document, together with the concepts and designs presented herein, as an instrument of services, is intended only for the specific purpose and client for which it was prepared. Reuse of and improper reliance of this document without written authorization and adoption by Kimley-Horn and Associates, Inc. shall be without liability to Kimley-Horn and Associates, Inc.

Copyright Kimley-Horn and Associates, Inc., 2014

REVISIONS						
NO.	BY:	DATE:	NO.	BY:	DATE:	
1			3			
2			4			

SHEET NO. S-25

TOTAL SHEETS 77

DRAWN BY: J. I. KIMBLE	DATE: 10/14	
CHECKED BY: J. C. WILSON	DATE: 10/14	
DESIGN ENGINEER OF RECORD: C.L. NARRON	DATE: 10/14	

10/31/2014 K:\RDT_Structures_Bridge\NC\01036186_B-5119 I40-85 Bridges\Cad\dgn\B-5119_349_S25.dgn