DocuSign Envelope ID: 15D54574-765E-4509-A721-DEE3FD812A7F

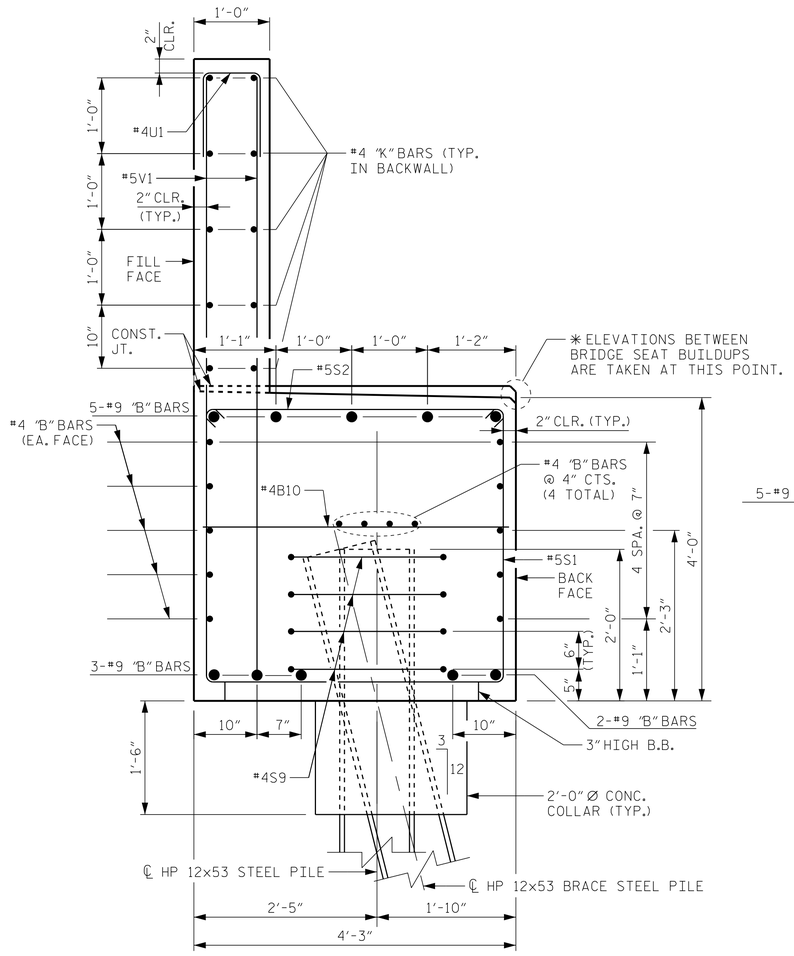

SECTION A-A

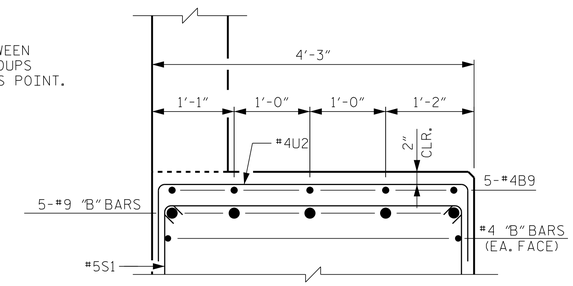

SECTION B-B

REINFORCEMENT IN BACKWALL NOT SHOWN FOR CLARITY.

BAR TYPES

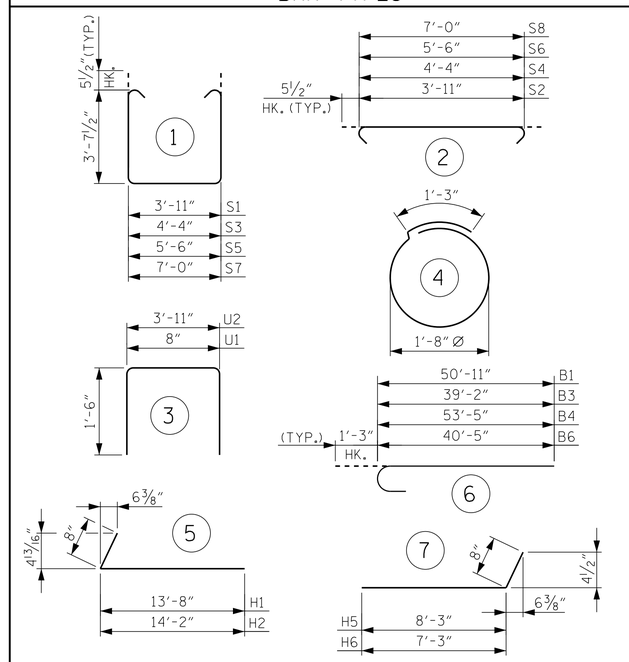

ALL BAR DIMENSIONS ARE OUT TO OUT

BILL OF MATERIAL

END BENT 1

BAR	NO.	SIZE	TYPE	LENGTH	WEIGHT
B1	5	9	6	52'-2"	887
B2	5	9	STR	39'-2"	666
B3	5	9	6	40'-5"	687
B4	5	9	6	54'-8"	929
B5	5	9	STR	40'-5"	687
B6	5	9	6	41'-8"	708
B7	28	4	STR	24'-9"	463
B8	42	4	STR	25'-8"	720
B9	45	4	STR	2'-6"	75
B10	28	4	STR	3'-11"	73
H1	19	6	5	14'-4"	409
H2	19	6	5	15'-0"	428
H3	10	6	STR	13'-1"	197
H4	7	6	7	8'-11"	94
H5	7	6	7	7'-11"	83
K1	20	4	STR	24'-9"	331
K2	30	4	STR	25'-8"	514
K3	6	4	STR	4'-0"	16
K4	6	4	STR	4'-7"	18
S1	121	5	1	12'-1"	1,525
S2	121	5	2	4'-10"	610
S3	1	5	1	12'-6"	13
S4	1	5	2	5'-3"	5
S5	1	5	1	13'-8"	14
S6	1	5	2	6'-5"	7
S7	1	5	1	15'-2"	16
S8	1	5	2	7'-11"	8
S9	44	4	4	6'-6"	191
U1	105	4	3	3'-8"	257
U2	27	4	3	6'-11"	125
V1	210	5	STR	8'-2"	1,789
V2	36	5	STR	9'-9"	366
V3	24	5	STR	10'-3"	257

REINFORCING STEEL	13,168 LBS.
CLASS A CONCRETE BREAKDOWN	
POUR #1A (CAP, LOWER WING, & COLLARS)	28.4 C.Y.
POUR #1B (CAP, LOWER WING, & COLLARS)	49.3 C.Y.
POUR #2A (UPPER PORTION OF WING)	9.5 C.Y.
POUR #2B (UPPER PORTION OF WING)	15.5 C.Y.
TOTAL CLASS A CONCRETE	102.7 C.Y.
HP 12x53 STEEL PILES	
NO. 11	565 LIN. FT.

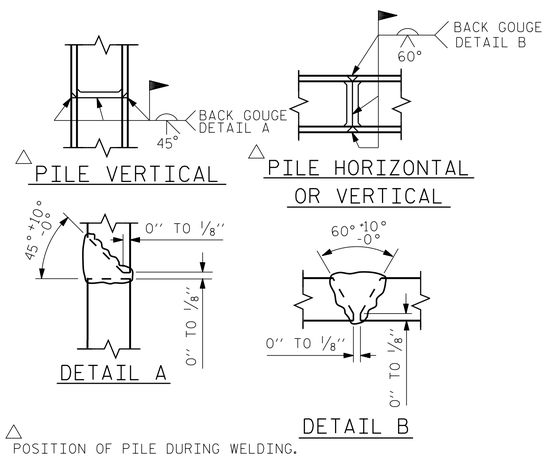

PILE SPLICE DETAILS

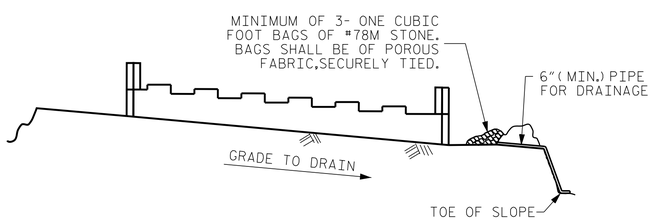

BAGGED STONE AND PIPE SHALL BE PLACED IMMEDIATELY AFTER COMPLETION OF END BENT EXCAVATION. PIPE MAY BE WITHER CONCRETE, CORRUGATED STEEL, CORRUGATED ALUMINUM ALLOY, OR CORRUGATED PLASTIC. PERFORATED PIPE WILL NOT BE ALLOWED.

BAGGED STONE SHALL REMAIN IN PLACE UNTIL THE ENGINEER DIRECTS THAT IT BE REMOVED. THE CONTRACTOR SHALL REMOVED AND DISPOSE OF SILT ACCUMULATIONS AT BAGGED STONE WHEN SO DIRECTED BY THE ENGINEER. BAGS SHALL BE REMOVED AND REPLACED WHENEVER THE ENGINEER DETERMINES THAT THEY HAVE DETERIORATED AND LOST THEIR EFFECTIVENESS.

NO SEPARATE PAYMENT WILL BE MADE FOR THIS WORK AND THE ENTIRE COST OF THIS WORK SHALL BE INCLUDED IN THE UNIT CONTRACT PRICE FOR THE SEVERAL PAY ITEMS.

TEMPORARY DRAINAGE AT END BENT

PROJECT NO. B-5119
GUILFORD COUNTY
STATION: 26+31.94 -L-
16+43.93 -Y1-

SHEET 4 OF 4

NORTH CAROLINA PROFESSIONAL SEAL 12186 ENGINEER CECIL L. NARRON

DocuSigned by: Cecil L. Narron C169A3D64502 4DD. 11/3/2014

Kimley»Horn
333 Fayetteville Street, Suite 600
Raleigh, NC 27601-1772
Phone (919) 835-1494
NC LICENSE # F-0102

This document, together with the concepts and designs presented herein, as an instrument of services, is intended only for the specific purpose and client for which it was prepared. Reuse of and improper reliance of this document without written authorization and adaption by Kimley-Horn and Associates, Inc. shall be without liability to Kimley-Horn and Associates, Inc.

Copyright Kimley-Horn and Associates, Inc., 2014

STATE OF NORTH CAROLINA
DEPARTMENT OF TRANSPORTATION
RALEIGH

SUBSTRUCTURE

END BENT 1

REVISIONS						SHEET NO.
NO.	BY:	DATE:	NO.	BY:	DATE:	S-32
1			3			TOTAL SHEETS
2			4			77

DRAWN BY: J. I. KIMBLE DATE: 10/14
CHECKED BY: J. C. WILSON DATE: 10/14
DESIGN ENGINEER OF RECORD: C.L. NARRON DATE: 10/14

10/31/2014 K:\RDT_Structures_Bridge\NC\01036186_B-5119 I40-85 Bridges\Cad\dgn\B-5119_349_S32.dgn