DocuSign Envelope ID: 15D54574-765E-4509-A721-DEE3FD812A7F

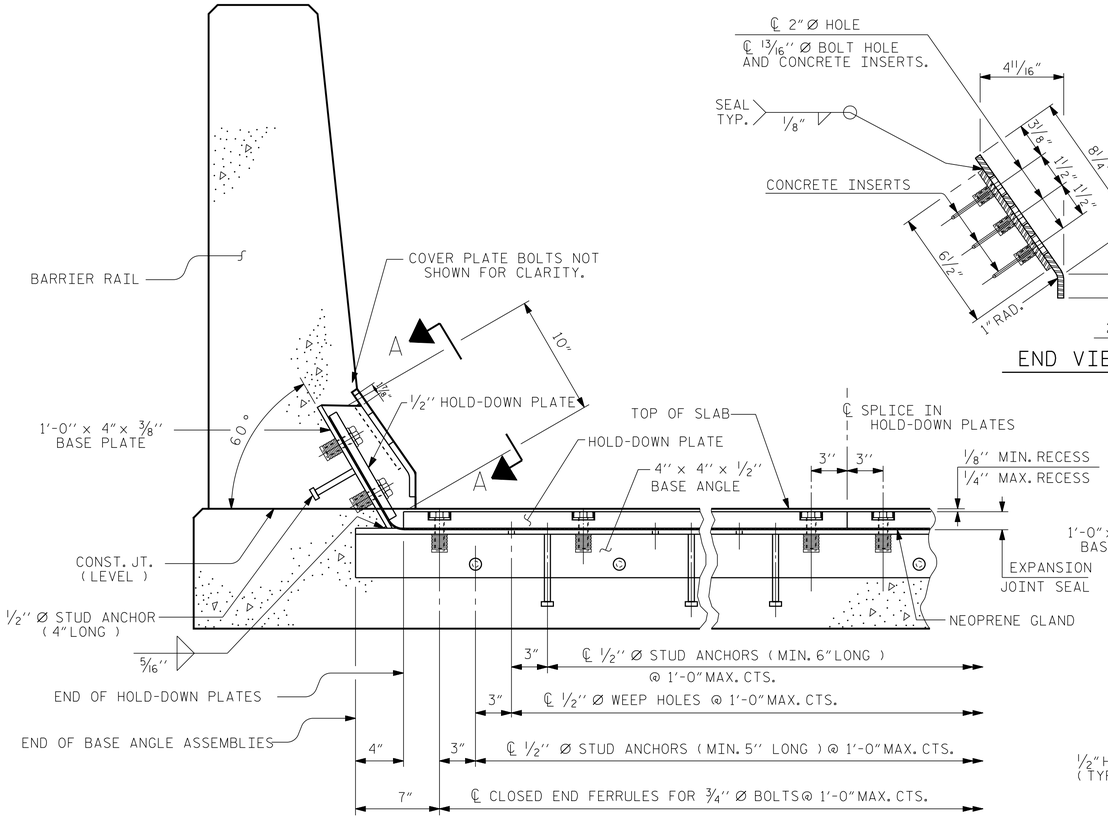

SECTION THRU RAIL NORMAL TO JOINT

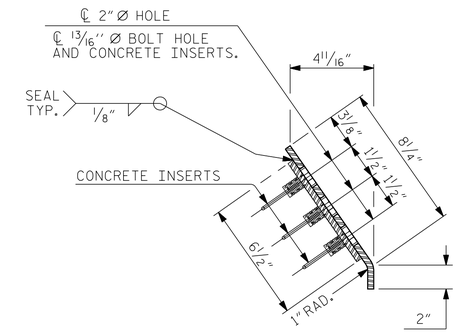

END VIEW

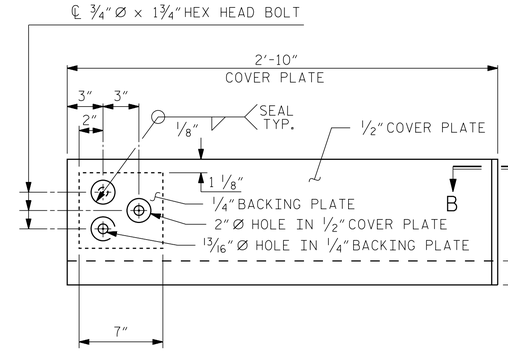

TYPE I - ELEVATION VIEW

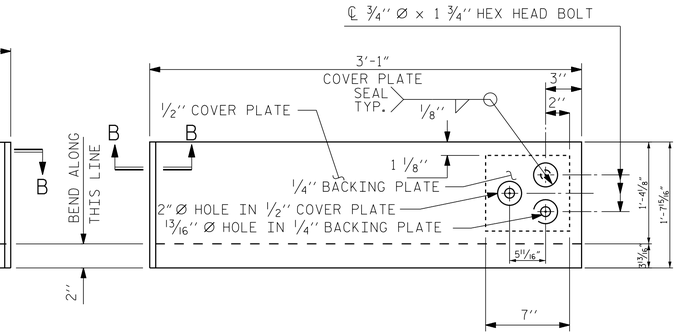

TYPE II - ELEVATION VIEW

BEND ALONG THIS LINE

2"

COVER PLATE DETAILS

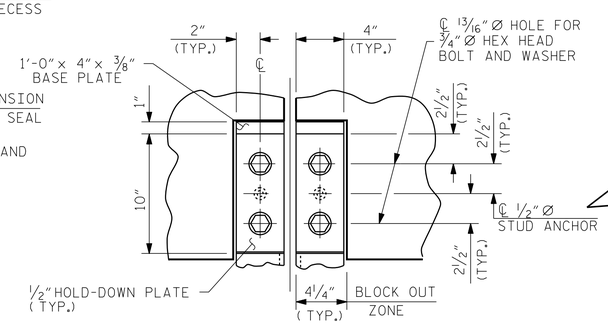

SECTION A - A

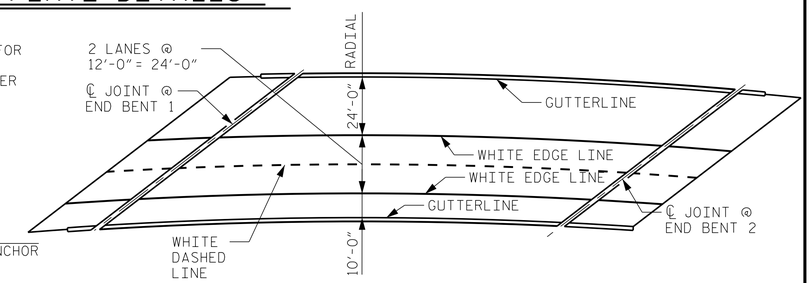

PAVEMENT MARKING ALIGNMENT

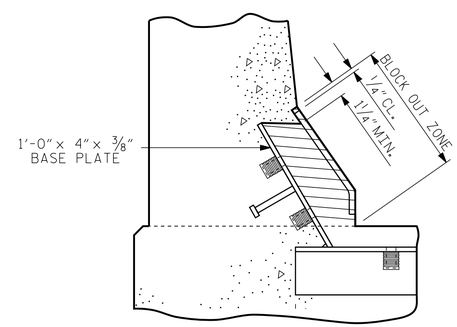

BLOCK OUT DETAIL

SEE "SECTION A - A" FOR OTHER DETAILS.

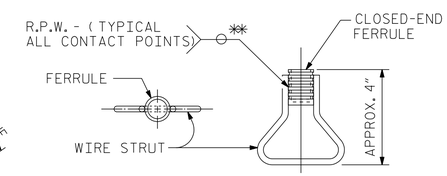

PLAN ELEVATION

CONCRETE INSERT

** EACH WELDED ATTACHMENT OF WIRE TO FERRULE SHALL DEVELOP THE TENSILE STRENGTH OF THE WIRE.

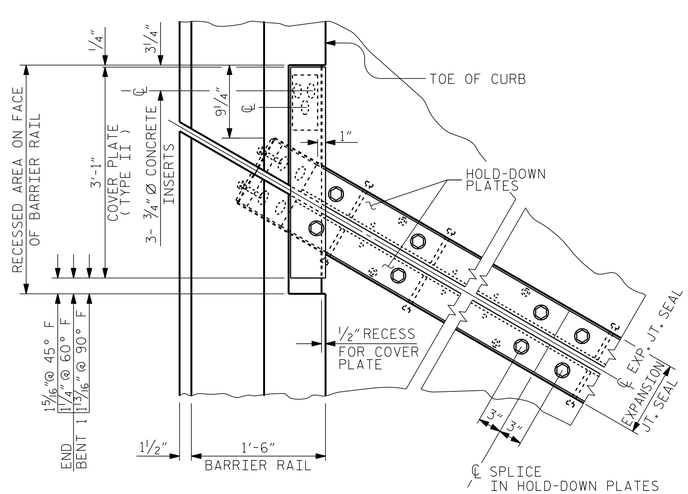

FLOW OF TRAFFIC

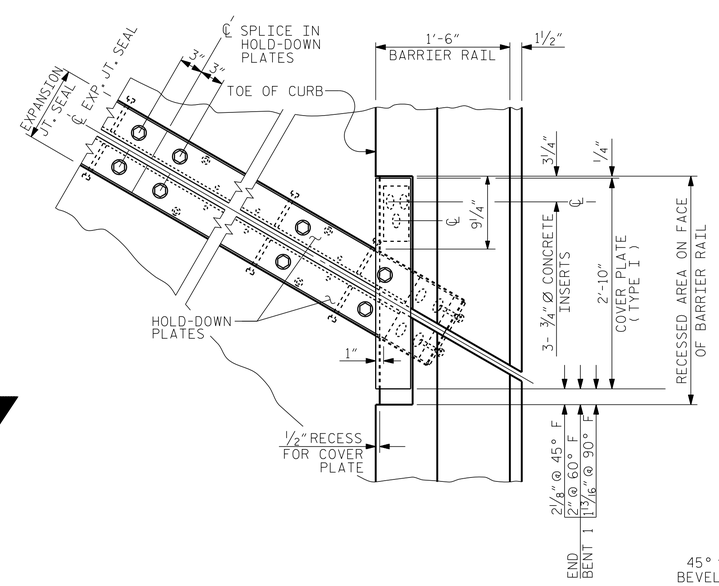

PLAN OF EXPANSION JOINT SEAL

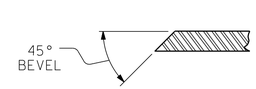

SECTION B - B

PROJECT NO. B-5119

GUILFORD COUNTY

STATION: 26+31.94 -L - 16+43.93 -Y1-

SHEET 2 OF 2

NORTH CAROLINA PROFESSIONAL SEAL 12186 ENGINEER CECIL L. NARRON

DocuSigned by: Cecil L. Narron C169A3D64502 4DD.

11/3/2014

Kimley»Horn

333 Fayetteville Street, Suite 600
Raleigh, NC 27601-1772
Phone (919) 835-1494

NC LICENSE # F-0102

This document, together with the concepts and designs presented herein, as an instrument of services, is intended only for the specific purpose and client for which it was prepared. Reuse of and improper reliance of this document without written authorization and adoption by Kimley-Horn and Associates, Inc. shall be without liability to Kimley-Horn and Associates, Inc.

Copyright Kimley-Horn and Associates, Inc., 2014

STATE OF NORTH CAROLINA
DEPARTMENT OF TRANSPORTATION
RALEIGH

STANDARD

EXPANSION JOINT SEAL DETAILS FOR BARRIER RAIL

REVISIONS							SHEET NO.
NO.	BY:	DATE:	NO.	BY:	DATE:		S-22
1			3				TOTAL SHEETS
2			4				77

STD. NO. EJS2

ASSEMBLED BY : JIK		DATE : 10/14	
CHECKED BY : JCW		DATE : 10/14	
DRAWN BY : REK 9/87	REV. 10/1/11	MAA/GM	
CHECKED BY : CRK 10/87	REV. 7/12	MAA/GM	
	REV. 6/13	MAA/GM	

10/31/2014 K:\RDT_Structures_Bridge\NC\0110336186_B-5119 I40-85 Bridges\Cad\dgn\B-5119_349_S22.dgn