DocuSign Envelope ID: 15D54574-765E-4509-A721-DEE3FD812A7F

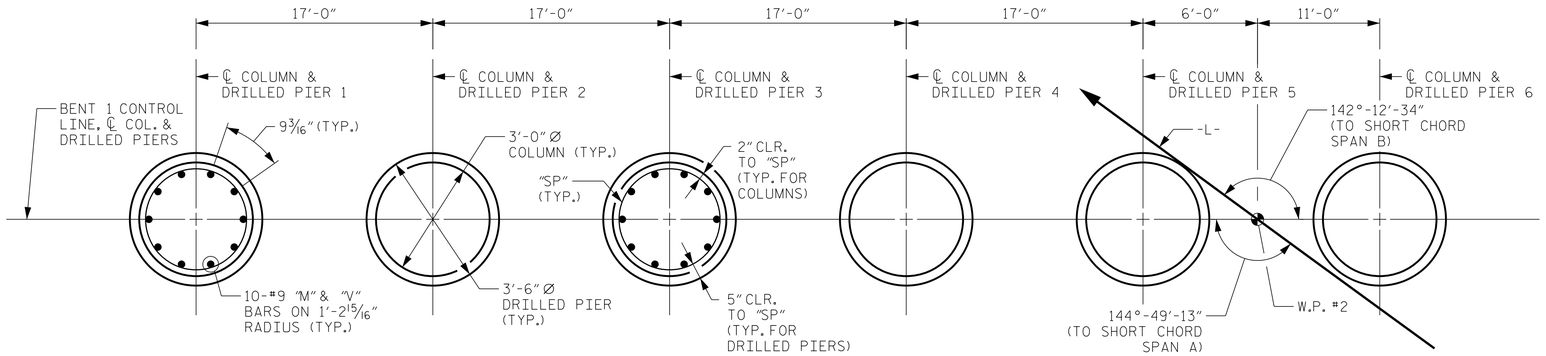

PLAN OF DRILLED PIERS & COLUMNS

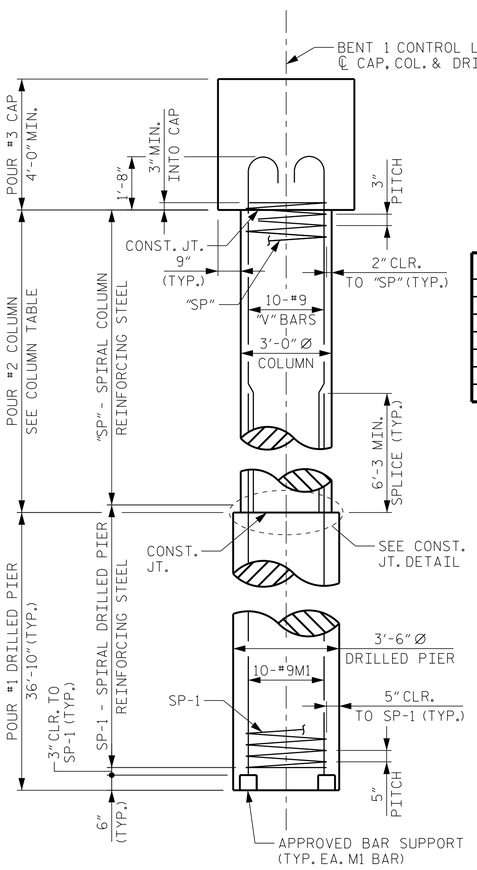

END ELEVATION

COLUMN TABLE	
COLUMN	LENGTH
1	21'-2 7/8"
2	20'-6 3/8"
3	19'-9 3/16"
4	19'-1 5/16"
5	18'-4 13/16"
6	17'-8 1/4"

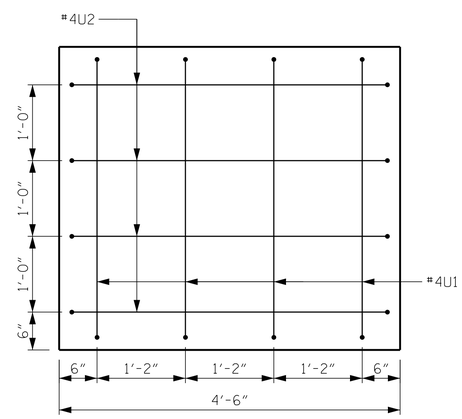

VIEW X-X

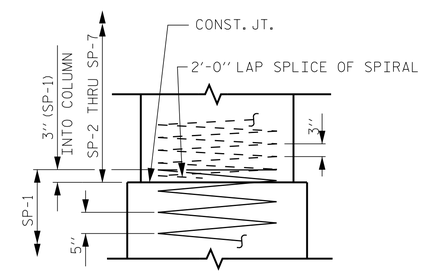

CONSTRUCTION JOINT DETAIL

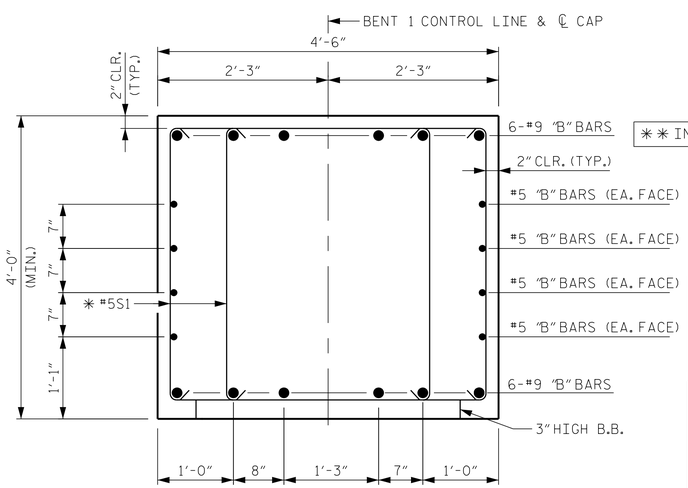

** INVERT ALTERNATE STIRRUPS

SECTION A-A

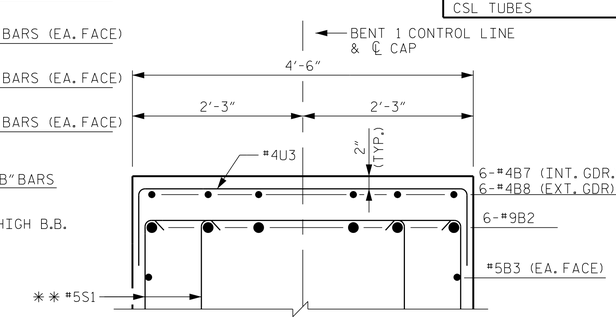

SECTION B-B

BAR TYPES

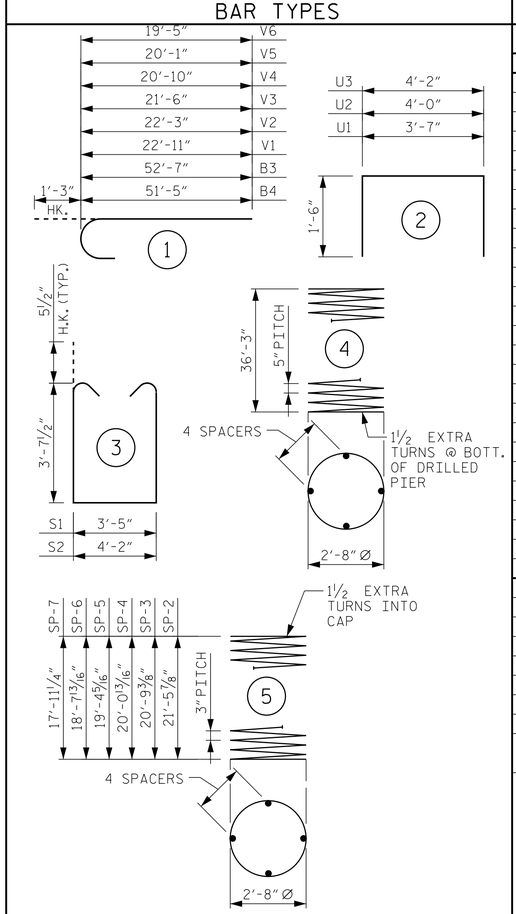

ALL BAR DIMENSIONS ARE OUT TO OUT

CLASS A CONCRETE BREAKDOWN (FOR BENT 1)	
POUR #2 (COLUMNS)	30.6 C.Y.
POUR #3A (CAP)	28.9 C.Y.
POUR #3B (CAP)	36.3 C.Y.
TOTAL CLASS A CONCRETE	95.8 C.Y.
DRILLED PIERS: (FOR BENT 1)	
DRILLED PIER CONCRETE POUR #1 (DRILLED PIERS)	78.8 C.Y.
3'-6" Ø DRILLED PIER NOT IN SOIL	21 LIN. FT.
3'-6" Ø DRILLED PIER IN SOIL	200 LIN. FT.
CSL TUBES	920 LIN. FT.

BILL OF MATERIAL

BENT 1

BAR	NO.	SIZE	TYPE	LENGTH	WEIGHT
B1	6	9	STR	50'-1"	1,022
B2	6	9	STR	51'-5"	1,049
B3	6	9	1	53'-10"	1,098
B4	6	9	1	52'-8"	1,074
B5	8	5	STR	46'-10"	391
B6	8	5	STR	51'-5"	429
B7	42	4	STR	4'-2"	117
B8	12	4	STR	4'-8"	37
M1	60	9	STR	45'-7"	9,299
S1	168	5	3	11'-7"	2,030
S2	6	5	3	12'-4"	77
U1	8	4	2	6'-7"	35
U2	8	4	2	7'-0"	37
U3	81	4	2	7'-2"	388
V1	10	9	1	24'-2"	822
V2	10	9	1	23'-6"	799
V3	10	9	1	22'-9"	774
V4	10	9	1	22'-1"	751
V5	10	9	1	21'-4"	725
V6	10	9	1	20'-8"	703
REINFORCING STEEL					21,657 LBS.

SP-1	6	*	4	744'-4"	4,658
SP-2	1	**	5	734'-4"	491
SP-3	1	**	5	709'-7"	474
SP-4	1	**	5	688'-11"	460
SP-5	1	**	5	664'-2"	444
SP-6	1	**	5	639'-5"	427
SP-7	1	**	5	618'-10"	413
SPIRAL COLUMN REINFORCING STEEL (FOR BENT 1)					7,367 LBS.

* THE SP-1 SPIRAL REINFORCING STEEL SHALL BE W31 OR D-31 COLD DRAWN WIRE OR #5 PLAIN OR DEFORMED BAR

** THE SPIRAL REINFORCING STEEL SHALL BE W20 OR D-20 COLD DRAWN WIRE OR #4 PLAIN OR DEFORMED BAR

PROJECT NO. B-5119
GUILFORD COUNTY
STATION: 26+31.94 -L-
16+43.93 -Y1-

SHEET 3 OF 3

NORTH CAROLINA PROFESSIONAL SEAL 12186 ENGINEER CECIL L. NARRON

DocuSigned by: Cecil L. Narron
C169A3D64502 4DD...
11/3/2014

Kimley»Horn
333 Fayetteville Street, Suite 600
Raleigh, NC 27601-1772
Phone (919) 835-1494
NC LICENSE # F-0102

This document, together with the concepts and designs presented herein, as an instrument of services, is intended only for the specific purpose and client for which it was prepared. Reuse of and improper reliance on this document without written authorization and adaption by Kimley-Horn and Associates, Inc. shall be without liability to Kimley-Horn and Associates, Inc.

Copyright Kimley-Horn and Associates, Inc., 2014

STATE OF NORTH CAROLINA
DEPARTMENT OF TRANSPORTATION
RALEIGH

SUBSTRUCTURE

BENT 1

REVISIONS						SHEET NO.
NO.	BY:	DATE:	NO.	BY:	DATE:	S-35
1			3			TOTAL SHEETS
2			4			77

DRAWN BY: J. I. KIMBLE DATE: 10/14
CHECKED BY: J. C. WILSON DATE: 10/14
DESIGN ENGINEER OF RECORD: C.L. NARRON DATE: 10/14

10/31/2014 K:\RDT_Structures_Bridge\NC\01036186_B-5119 I40-85 Bridges\Cad\dgn\B-5119_349_S35.dgn