DocuSign Envelope ID: 15D54574-765E-4509-A721-DEE3FD812A7F

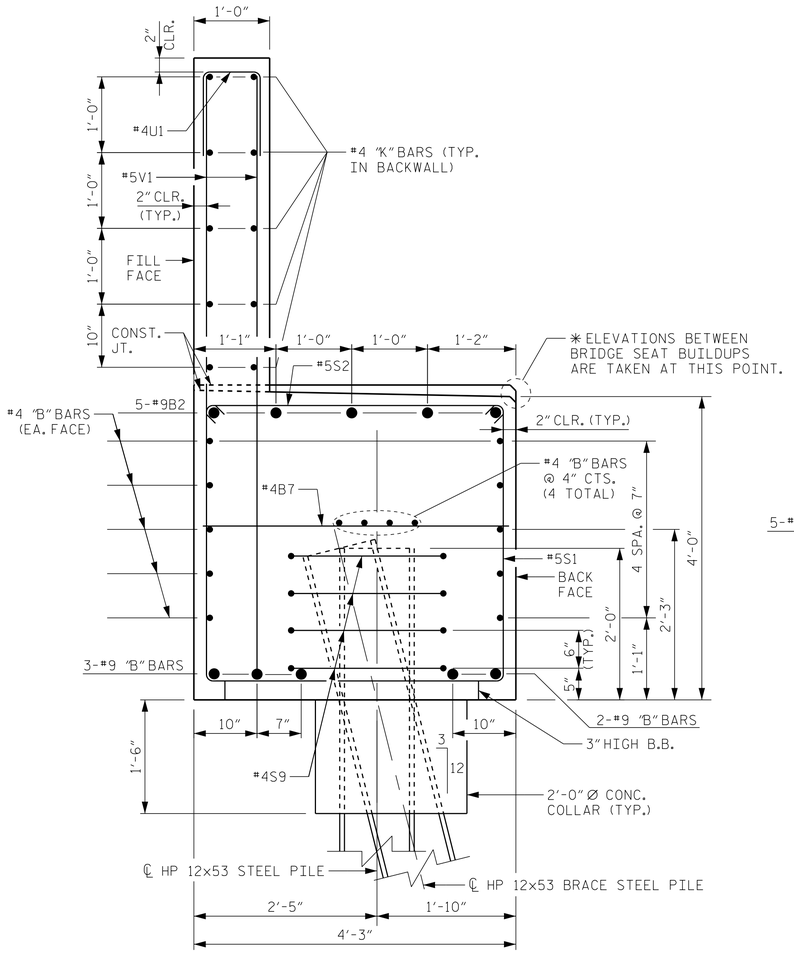

SECTION A-A

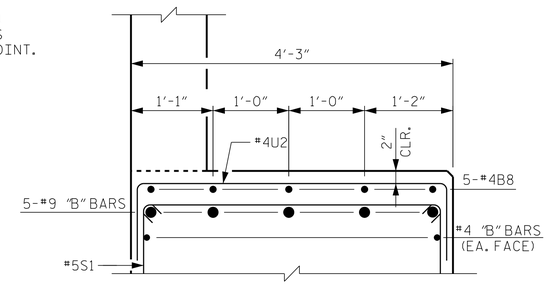

SECTION B-B

REINFORCEMENT IN BACKWALL NOT SHOWN FOR CLARITY.

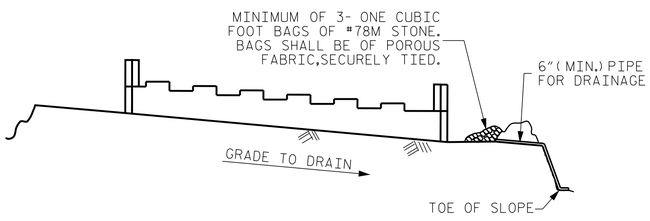

BAGGED STONE AND PIPE SHALL BE PLACED IMMEDIATELY AFTER COMPLETION OF END BENT EXCAVATION. PIPE MAY BE WITHER CONCRETE, CORRUGATED STEEL, CORRUGATED ALUMINUM ALLOY, OR CORRUGATED PLASTIC. PERFORATED PIPE WILL NOT BE ALLOWED.

BAGGED STONE SHALL REMAIN IN PLACE UNTIL THE ENGINEER DIRECTS THAT IT BE REMOVED. THE CONTRACTOR SHALL REMOVED AND DISPOSE OF SILT ACCUMULATIONS AT BAGGED STONE WHEN SO DIRECTED BY THE ENGINEER. BAGS SHALL BE REMOVED AND REPLACED WHENEVER THE ENGINEER DETERMINES THAT THEY HAVE DETERIORATED AND LOST THEIR EFFECTIVENESS.

NO SEPARATE PAYMENT WILL BE MADE FOR THIS WORK AND THE ENTIRE COST OF THIS WORK SHALL BE INCLUDED IN THE UNIT CONTRACT PRICE FOR THE SEVERAL PAY ITEMS.

TEMPORARY DRAINAGE AT END BENT

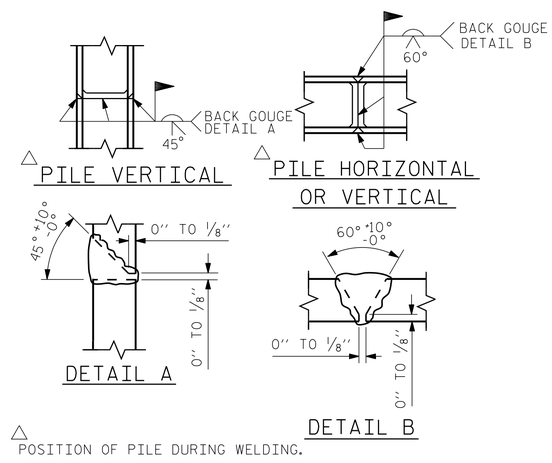

PILE SPLICE DETAILS

BAR TYPES

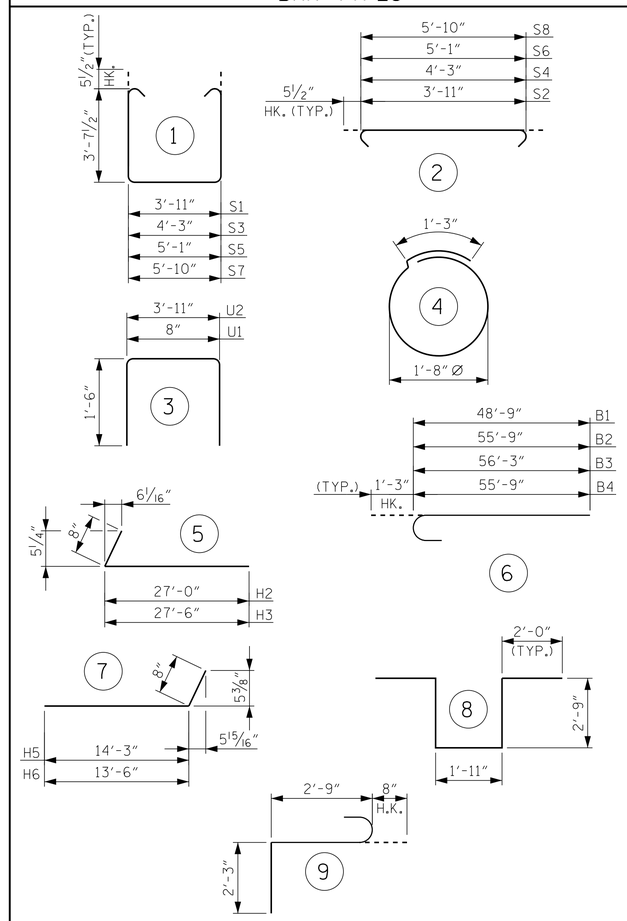

ALL BAR DIMENSIONS ARE OUT TO OUT

BILL OF MATERIAL

END BENT 2

BAR	NO.	SIZE	TYPE	LENGTH	WEIGHT
B1	5	9	6	49'-4"	839
B2	5	9	6	34'-3"	582
B3	5	9	6	51'-10"	881
B4	5	9	6	35'-6"	604
B5	28	4	STR	23'-4"	436
B6	42	4	STR	21'-7"	606
B7	25	4	STR	3'-11"	65
B8	45	4	STR	2'-6"	75
B9	5	9	STR	33'-0"	561
B10	5	9	STR	34'-3"	582
H1	12	5	STR	31'-2"	390
H2	8	5	5	27'-8"	231
H3	8	5	5	28'-2"	235
H4	16	6	STR	18'-4"	441
H5	12	6	7	14'-11"	269
H6	12	6	7	14'-2"	255
K1	20	4	STR	23'-4"	312
K2	30	4	STR	21'-7"	433
K3	6	4	STR	3'-9"	15
S1	102	5	1	12'-1"	1,285
S2	102	5	2	4'-10"	514
S3	2	5	1	12'-5"	26
S4	2	5	2	5'-2"	11
S5	2	5	1	13'-3"	28
S6	2	5	2	6'-0"	13
S7	1	5	1	14'-0"	15
S8	1	5	2	6'-9"	7
S9	40	4	4	6'-6"	174
S10	3	6	8	11'-5"	51
S11	3	6	9	5'-8"	26
U1	91	4	3	3'-8"	223
U2	27	4	3	6'-11"	125
V1	182	5	STR	7'-11"	1,503
V2	91	5	STR	9'-7"	910

REINFORCING STEEL	12,723 LBS.
CLASS A CONCRETE BREAKDOWN	
POUR #1A (CAP, LOWER WING, & COLLARS)	30.5 C.Y.
POUR #1B (CAP, LOWER WING, & COLLARS)	39.9 C.Y.
POUR #2A (UPPER PORTION OF WING)	12.2 C.Y.
POUR #2B (UPPER PORTION OF WING)	12.8 C.Y.
TOTAL CLASS A CONCRETE	95.4 C.Y.
HP 12x53 STEEL PILES	
NO. 11	625 LIN. FT.

PROJECT NO. B-5119
GUILFORD COUNTY
STATION: 26+31.94 -L-
16+43.93 -Y1-

SHEET 4 OF 4

NORTH CAROLINA PROFESSIONAL SEAL 12186 ENGINEER CECIL L. NARRON

DocuSigned by: Cecil L. Narron C169A3D64502 4DD... 11/3/2014

Kimley»Horn
333 Fayetteville Street, Suite 600
Raleigh, NC 27601-1772
Phone (919) 835-1494
NC LICENSE # F-0102

This document, together with the concepts and designs presented herein, as an instrument of services, is intended only for the specific purpose and client for which it was prepared. Reuse of and improper reliance of this document without written authorization and adaption by Kimley-Horn and Associates, Inc. shall be without liability to Kimley-Horn and Associates, Inc.
Copyright Kimley-Horn and Associates, Inc., 2014

STATE OF NORTH CAROLINA
DEPARTMENT OF TRANSPORTATION
RALEIGH

SUBSTRUCTURE

END BENT 2

REVISIONS						SHEET NO.
NO.	BY:	DATE:	NO.	BY:	DATE:	S-42
1			3			TOTAL SHEETS
2			4			77

DRAWN BY: J. I. KIMBLE DATE: 10/14
CHECKED BY: J. C. WILSON DATE: 10/14
DESIGN ENGINEER OF RECORD: C.L. NARRON DATE: 10/14

10/31/2014 K:\RDT_Structures_Bridge\NC\01036186_B-5119 I40-85 Bridges\Cad\dgn\B-5119_349_S42.dgn