DocuSign Envelope ID: 15D54574-765E-4509-A721-DEE3FD812A7F

NOTES

SEE SHEET 4 OF 4 FOR BARRIER RAIL NOTES.

BAR TYPES

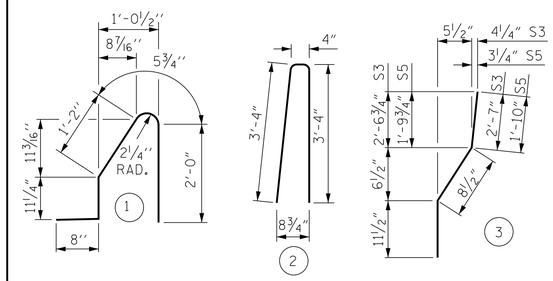

ALL BAR DIMENSIONS ARE OUT TO OUT

BILL OF MATERIAL — BARRIER RAIL AT EB #1

BAR	NO.	SIZE	TYPE	LENGTH	WEIGHT
✳ S1	10	5	1	5'-3"	55
✳ S2	10	5	2	7'-0"	73
✳ S3	4	5	3	4'-3"	18
✳ S4	8	5	STR	4'-1"	34
✳ S5	4	5	3	3'-6"	15
✳ S6	4	5	STR	3'-4"	14
✳ S7	5	5	STR	2'-4"	12
✳ B1	1	5	STR	9'-11"	10
✳ B2	4	5	STR	10'-5"	43
✳ B3	6	5	STR	11'-2"	70
✳ B4	1	5	STR	9'-1"	9
✳ B5	4	5	STR	8'-1"	34
✳ B6	6	5	STR	7'-8"	48

✳ EPOXY COATED REINFORCING STEEL 435 LBS.
CLASS AA CONCRETE 2.7 C.Y.
CONCRETE BARRIER RAIL 20.0 LIN. FT.

BILL OF MATERIAL — BARRIER RAIL AT EB #2

BAR	NO.	SIZE	TYPE	LENGTH	WEIGHT
✳ S1	30	5	1	5'-3"	164
✳ S2	30	5	2	7'-0"	219
✳ S3	2	5	3	4'-3"	9
✳ S4	7	5	STR	4'-1"	30
✳ S5	2	5	3	3'-6"	7
✳ S6	2	5	STR	3'-4"	7
✳ S7	4	5	STR	2'-4"	10
✳ B7	1	5	STR	9'-3"	10
✳ B8	4	5	STR	8'-6"	35
✳ B9	6	5	STR	8'-3"	52
✳ B10	1	5	STR	25'-1"	26
✳ B11	4	5	STR	25'-6"	106
✳ B12	6	5	STR	26'-2"	164

✳ EPOXY COATED REINFORCING STEEL 839 LBS.
CLASS AA CONCRETE 4.8 C.Y.
CONCRETE BARRIER RAIL 35.2 LIN. FT.

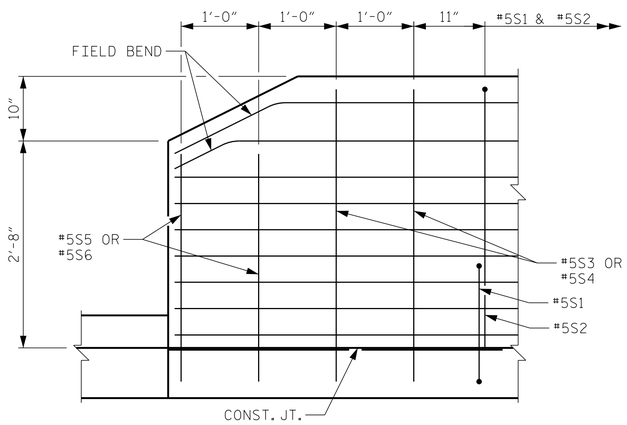

SIDE VIEW

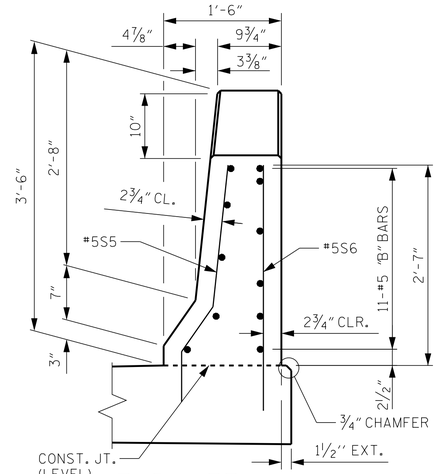

END VIEW

END OF RAIL DETAILS

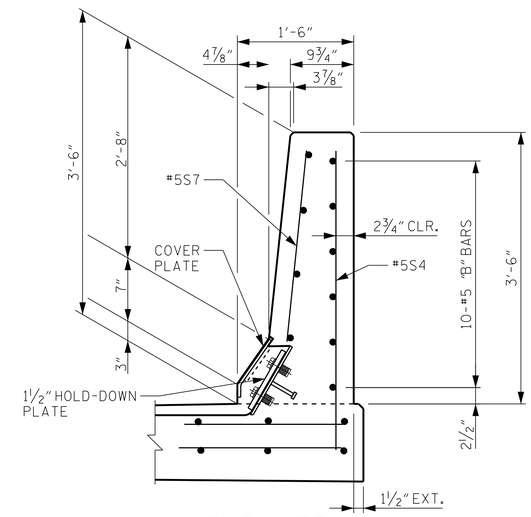

END VIEW

(@ EXP. JOINT LEFT SIDE EB1)
OTHERS SIMILAR

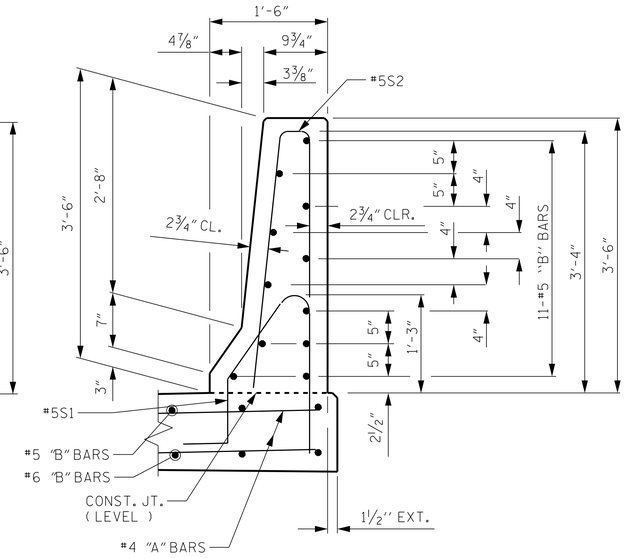

SECTION THRU RAIL

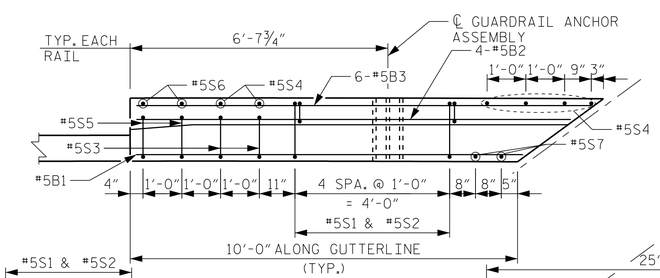

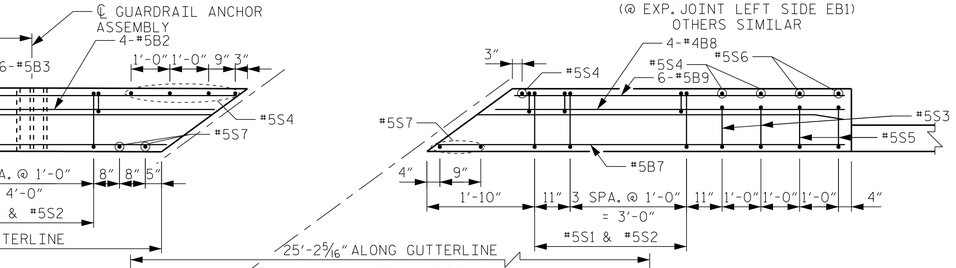

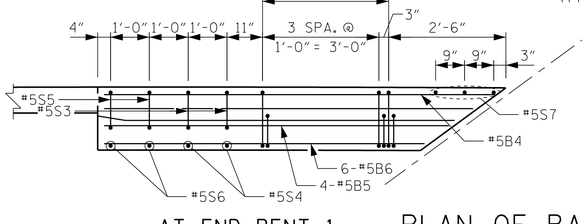

AT END BENT 1

PLAN OF BARRIER RAIL

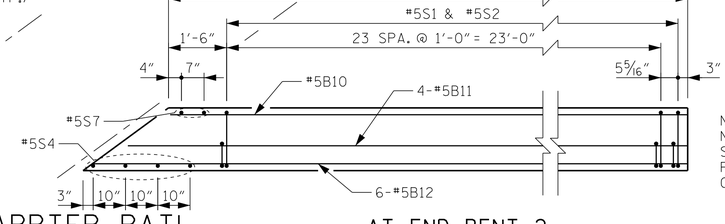

AT END BENT 2

NOTE:
NO GUARDRAIL ATTACHMENT RIGHT SIDE OF END BENT 2. SEE ROADWAY PLANS FOR CONCRETE BARRIER OFF OF APPROACH SLAB.

PROJECT NO. B-5119
GUILFORD COUNTY
STATION: 26+31.94 -L-
16+43.93 -Y1-

SHEET 3 OF 4

NORTH CAROLINA PROFESSIONAL SEAL 12186 ENGINEER CECIL L. NARRON

DocuSigned by: Cecil L. Narron C169A3D645024DD... 11/3/2014

Kimley»Horn
333 Fayetteville Street, Suite 600
Raleigh, NC 27601-1772
Phone (919) 835-1494
NC LICENSE # F-0102

This document, together with the concepts and designs presented herein, as an instrument of services, is intended only for the specific purpose and client for which it was prepared. Reuse of and improper reliance of this document without written authorization and adoption by Kimley-Horn and Associates, Inc. shall be without liability to Kimley-Horn and Associates, Inc.
Copyright Kimley-Horn and Associates, Inc., 2014

STATE OF NORTH CAROLINA
DEPARTMENT OF TRANSPORTATION
RALEIGH

BRIDGE APPROACH SLAB DETAILS

REVISIONS						
NO.	BY:	DATE:	NO.	BY:	DATE:	
1			3			
2			4			

SHEET NO. S-46
TOTAL SHEETS 77

DRAWN BY: J. I. KIMBLE DATE: 10/14
CHECKED BY: J. C. WILSON DATE: 10/14
DESIGN ENGINEER OF RECORD: C.L. NARRON DATE: 10/14

10/31/2014 K:\RDT_Structures_Bridge\NC\01103686_B-5119 I40-85 Bridges\Cad\dgn\B-5119_349_S46.dgn