DocuSign Envelope ID: 15D54574-765E-4509-A721-DEE3FD812A7F

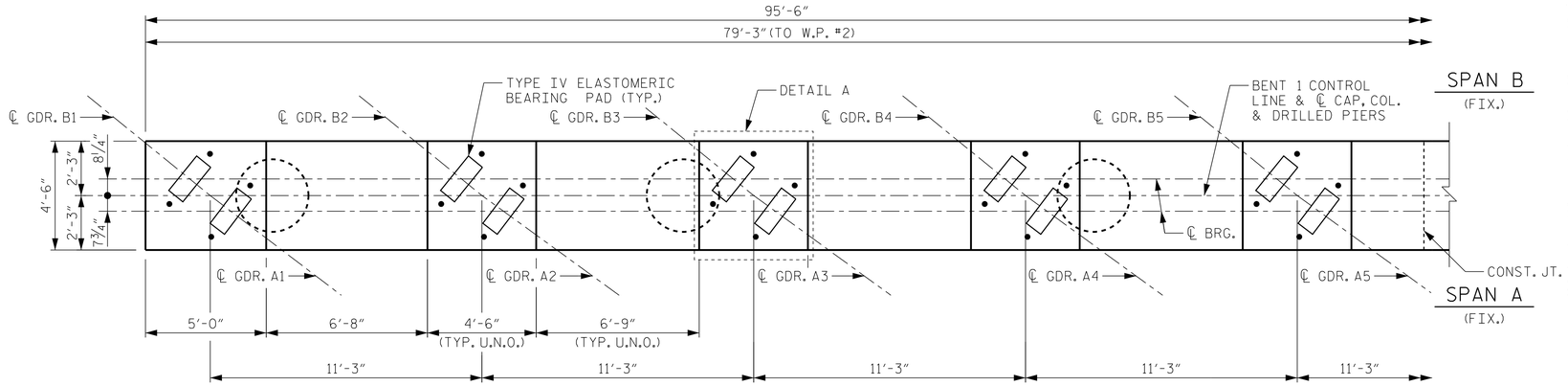

NOTES

STIRRUPS AND U3 BARS MAY BE SHIFTED AS NECESSARY TO CLEAR ANCHOR BOLTS.

HOOKS ON "V" BARS MAY BE TURNED AS NECESSARY FOR PLACING REINFORCING STEEL.

ALL STEEL IN THE DRILLED PIERS IS INCLUDED IN THE PAY ITEMS FOR "REINFORCING STEEL" AND "SPIRAL COLUMN REINFORCING STEEL".

THE CONTRACTOR'S ATTENTION IS CALLED TO THE FACT THAT THE LONGITUDINAL REINFORCEMENT FOR THE DRILLED PIERS IS DETAILED WITH 3 FEET OF EXTRA LENGTH.

SPLICING OF THE LONGITUDINAL BARS IN THE DRILLED PIER WILL NOT BE PERMITTED.

THE LOCATION OF THE CONSTRUCTION JOINT IN THE DRILLED PIERS IS BASED ON AN APPROXIMATE GROUND LINE ELEVATION. IF THE CONSTRUCTION JOINT IS ABOVE THE ACTUAL GROUND LINE ELEVATION, THE CONTRACTOR SHALL PLACE THE CONSTRUCTION JOINT 1 FT. BELOW THE GROUND LINE.

FOR SECTIONS A-A & B-B AND VIEW X-X, SEE SHEET 3 OF 3.

✳✳ INVERT ALTERNATE STIRRUP PAIRS

PLAN

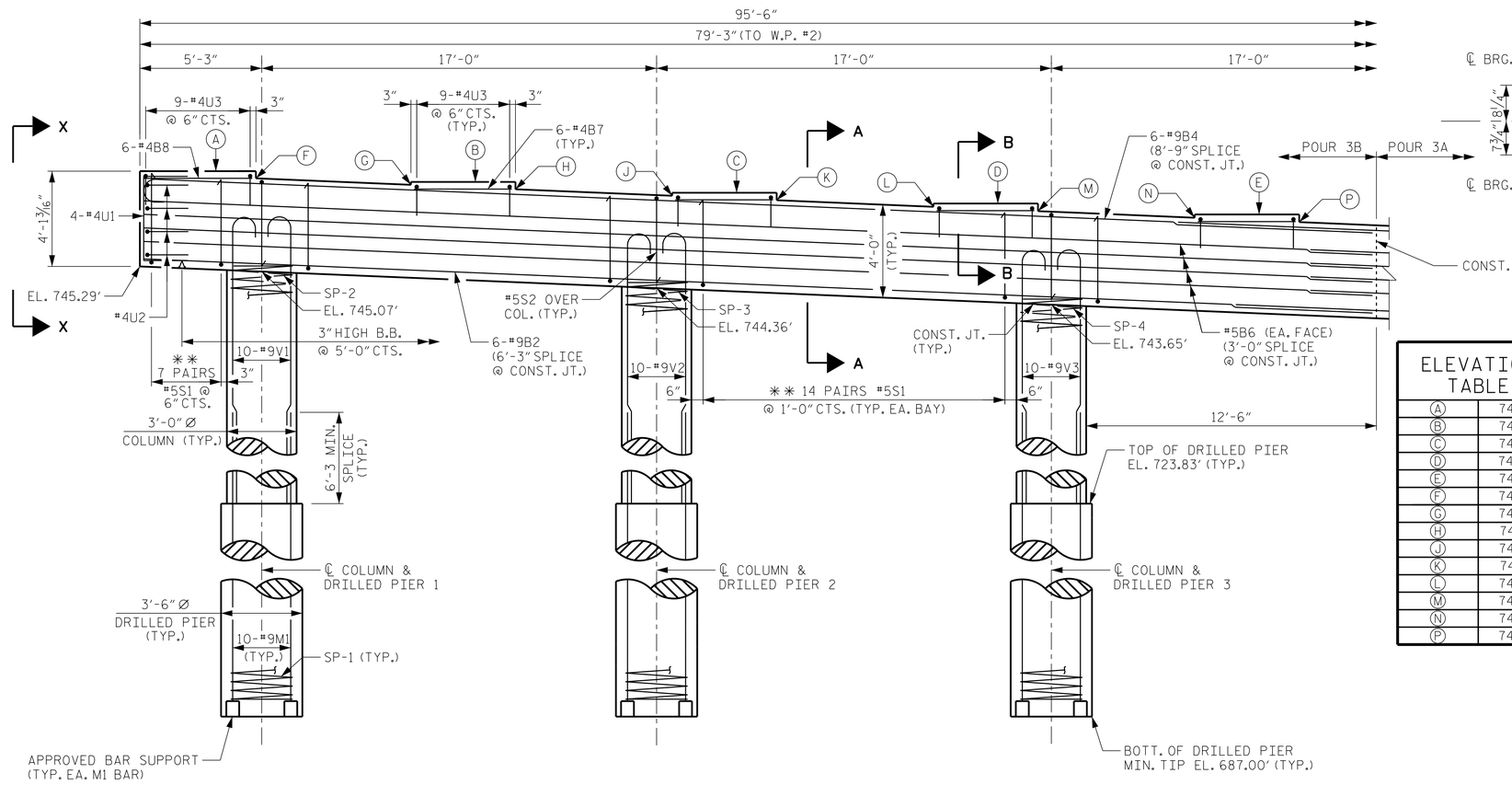

ELEVATION

ELEVATION TABLE	
A	749.39'
B	748.93'
C	748.46'
D	748.00'
E	747.53'
F	749.08'
G	748.80'
H	748.61'
J	748.33'
K	748.14'
L	747.86'
M	747.67'
N	747.39'
P	747.20'

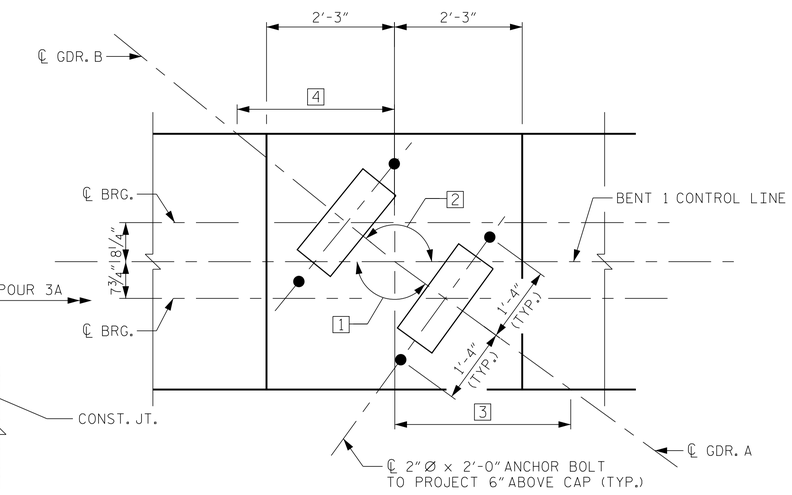

DETAIL A

(TYP. EA. GDR.)

GDR.	1	2	3	4
A1	142°-46'-15"	-	2'-11 9/16"	-
A2-A8	144°-00'-32"	-	3'-1 3/16"	-
A9	145°-10'-38"	-	-	-
B1-B5	-	140°-57'-50"	-	2'-9 5/16"
B6-B9	-	142°-06'-53"	-	2'-10 11/16"

PROJECT NO. B-5119

GUILFORD COUNTY

STATION: 26+31.94 -L-
16+43.93 -Y1-

SHEET 1 OF 3

NORTH CAROLINA PROFESSIONAL SEAL 12186 ENGINEER CECIL L. NARRON

DocuSigned by: Cecil L. Narron C169A3D64502 4DD... 11/3/2014

Kimley»Horn
333 Fayetteville Street, Suite 600
Raleigh, NC 27601-1772
Phone (919) 835-1494
NC LICENSE # F-0102

This document, together with the concepts and designs presented herein, as an instrument of services, is intended only for the specific purpose and client for which it was prepared. Reuse of and improper reliance of this document without written authorization and adaption by Kimley-Horn and Associates, Inc. shall be without liability to Kimley-Horn and Associates, Inc.
Copyright Kimley-Horn and Associates, Inc., 2014

STATE OF NORTH CAROLINA
DEPARTMENT OF TRANSPORTATION
RALEIGH

SUBSTRUCTURE

BENT 1

REVISIONS						SHEET NO.
NO.	BY:	DATE:	NO.	BY:	DATE:	S-33
1			3			TOTAL SHEETS
2			4			77

DRAWN BY: J. I. KIMBLE DATE: 10/14
CHECKED BY: J. C. WILSON DATE: 10/14
DESIGN ENGINEER OF RECORD: C.L. NARRON DATE: 10/14

10/31/2014 K:\RDT_Structures_Bridge\NC\01036186_B-5119 I40-85 Bridges\Cad\dgn\B-5119_349_S33.dgn