DocuSign Envelope ID: 15D54574-765E-4509-A721-DEE3FD812A7F

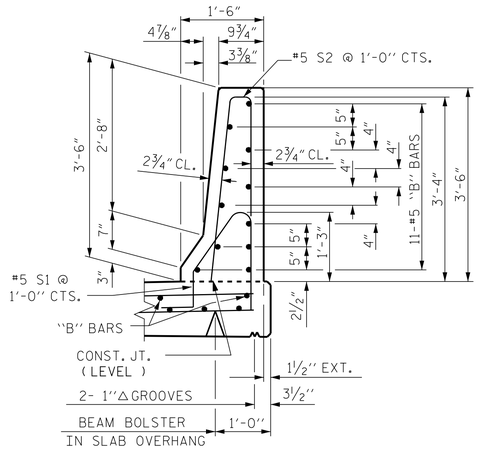

SECTION THRU RAIL

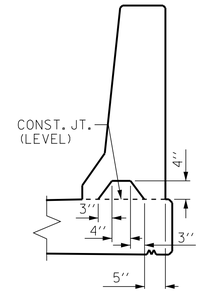

SECTION S-S

AT DAM IN OPEN JOINT
(THIS IS TO BE USED ONLY
WHEN SLIP FORM IS USED)

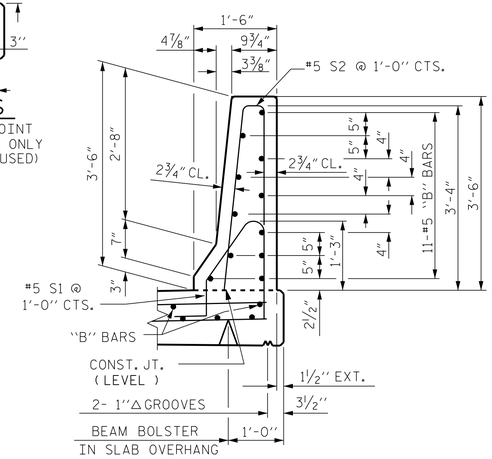

SECTION THRU RAIL

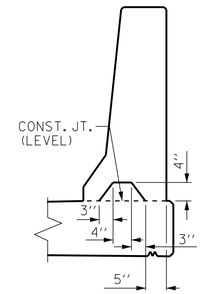

SECTION S-S

AT DAM IN OPEN JOINT
(THIS IS TO BE USED ONLY
WHEN SLIP FORM IS USED)

NOTES

FOR CONCRETE BARRIER RAIL ON APPROACH SLAB, SEE APPROACH SLAB SHEETS.

THE BARRIER RAIL IN EACH SPAN SHALL NOT BE CAST UNTIL ALL SLAB CONCRETE IN THAT SPAN HAS BEEN CAST AND HAS REACHED A MINIMUM COMPRESSIVE STRENGTH OF 3,000 PSI.

THE JOINT IN THE BRIDGE DECK SHALL BE FORMED PRIOR TO CASTING OF BARRIER RAIL.

ALL REINFORCING STEEL IN BARRIER RAILS SHALL BE EPOXY COATED.

THE #5S4 BARS SHALL BE INSTALLED, USING AN ADHESIVE ANCHORING SYSTEM. THE YIELD LOAD FOR THE #5S4 BARS IS 18.6 KIPS. FIELD TESTING FOR THE ADHESIVE BONDING SYSTEM IS NOT REQUIRED.

GROOVED CONTRACTION JOINTS, 1/2" IN DEPTH, SHALL BE TOOLED IN ALL EXPOSED FACES OF THE BARRIER RAIL AND IN ACCORDANCE WITH ARTICLE 825-10(B) OF THE STANDARD SPECIFICATIONS. THE CONTRACTION JOINT SHALL BE LOCATED AT EACH THIRD POINT BETWEEN BARRIER RAIL EXPANSION JOINTS. ONLY ONE CONTRACTION JOINT IS REQUIRED AT MIDPOINT OF BARRIER RAIL SEGMENTS LESS THAN 20 FEET IN LENGTH AND NO CONTRACTION JOINTS ARE REQUIRED FOR THOSE SEGMENTS LESS THAN 10 FEET IN LENGTH.

FOR EPOXY COATED REINFORCING STEEL AND CLASS AA CONCRETE IN THE BARRIER RAIL ON THE APPROACH SLAB, SEE "APPROACH SLAB DETAILS" SHEET.

BAR TYPES

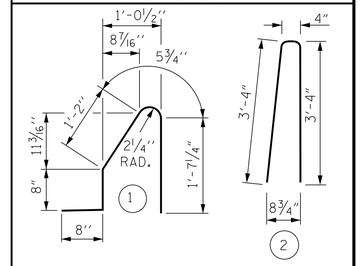

ALL BAR DIMENSIONS ARE OUT TO OUT

BILL OF MATERIAL

FOR CONCRETE BARRIER RAIL ONLY

BAR	NO.	SIZE	TYPE	LENGTH	WEIGHT
* B1	132	5	STR	23'-7"	3,247
* B2	6	5	STR	25'-1"	157
* B3	4	5	STR	25'-4"	106
* B4	1	5	STR	26'-2"	27
* B5	6	5	STR	28'-3"	177
* B6	4	5	STR	27'-5"	114
* B7	1	5	STR	26'-10"	28
* B8	6	5	STR	19'-9"	124
* B9	4	5	STR	20'-1"	84
* B10	1	5	STR	21'-0"	22
* B11	6	5	STR	22'-9"	142
* B12	4	5	STR	22'-2"	92
* B13	1	5	STR	21'-8"	23
* S1	393	5	1	4'-7"	1,879
* S2	393	5	2	7'-0"	2,869
* S4	8	5	STR	4'-0"	33
* S7	9	5	STR	2'-4"	22

* EPOXY COATED REINFORCING STEEL	9,146 LBS.
CLASS AA CONCRETE	52.6 C.Y.
CONCRETE BARRIER RAIL	385.7 LIN. FT.

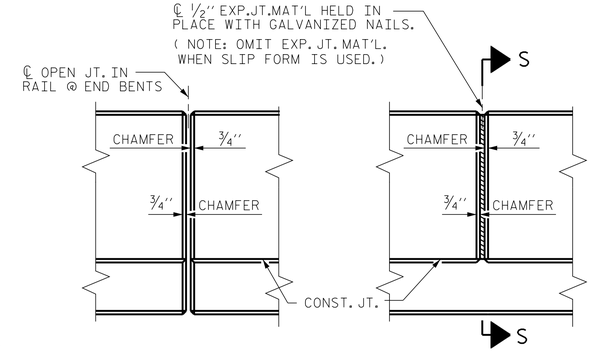

ELEVATION AT EXPANSION JOINTS

BARRIER RAIL DETAILS

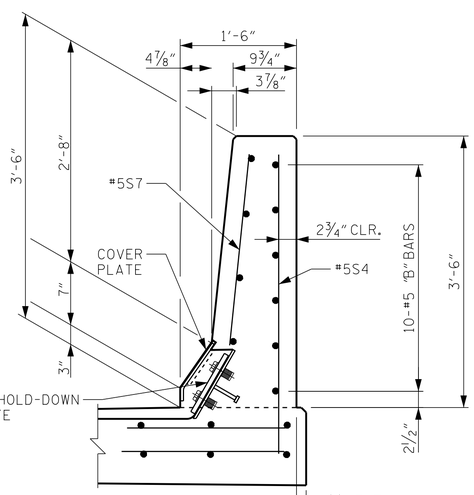

END VIEW

(@ EXP. JOINT LEFT SIDE EB1)
OTHERS SIMILAR

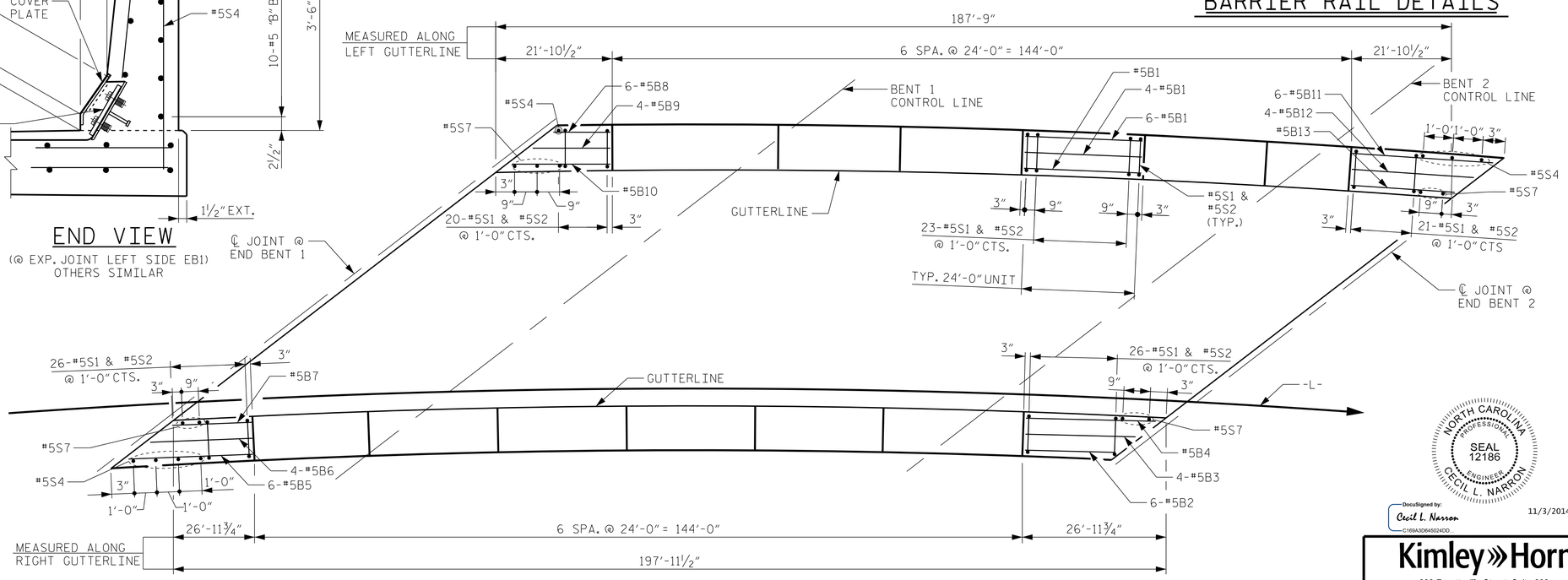

PLAN OF BARRIER RAIL

PROJECT NO. B-5119

GUILFORD COUNTY

STATION: 26+31.94 -L -
16+43.93 -Y1-

NORTH CAROLINA PROFESSIONAL SEAL 12186 ENGINEER CECIL L. NARRON

DocuSigned by: Cecil L. Narron C169A3D64502 4DD... 11/3/2014

Kimley»Horn
333 Fayetteville Street, Suite 600
Raleigh, NC 27601-1772
Phone (919) 835-1494
NC LICENSE # F-0102

This document, together with the concepts and designs presented herein, as an instrument of services, is intended only for the specific purpose and client for which it was prepared. Reuse of and improper reliance on this document without written authorization and adaptation by Kimley-Horn and Associates, Inc. shall be without liability to Kimley-Horn and Associates, Inc.
Copyright Kimley-Horn and Associates, Inc., 2014

STATE OF NORTH CAROLINA
DEPARTMENT OF TRANSPORTATION
RALEIGH

STANDARD
CONCRETE
BARRIER RAIL

REVISIONS						SHEET NO.
NO.	BY:	DATE:	NO.	BY:	DATE:	S-23
1			3			TOTAL SHEETS
2			4			77

ASSEMBLED BY : JIK		DATE :	10/14
CHECKED BY : JCW		DATE :	10/14
DRAWN BY : ARB	5/87	REV. 10/1/11	MAA/GM
CHECKED BY : SJD	9/87	REV. 7/12	MAA/GM
		REV. 6/13	MAA/GM

10/31/2014 K:\RDT_Structures_Bridge\NC\01036186_B-5119 I40-85 Bridges\Cad\dgn\B-5119_349_S23.dgn

STD. NO. CBR1