PROJ. REFERENCE NO.	SHEET NO.
B-5119	TMP-7

MESSAGE NO. 1	MESSAGE NO. 2
RIGHT LANE CLOSED	MERGE LEFT

CHANGEABLE MESSAGE SIGN

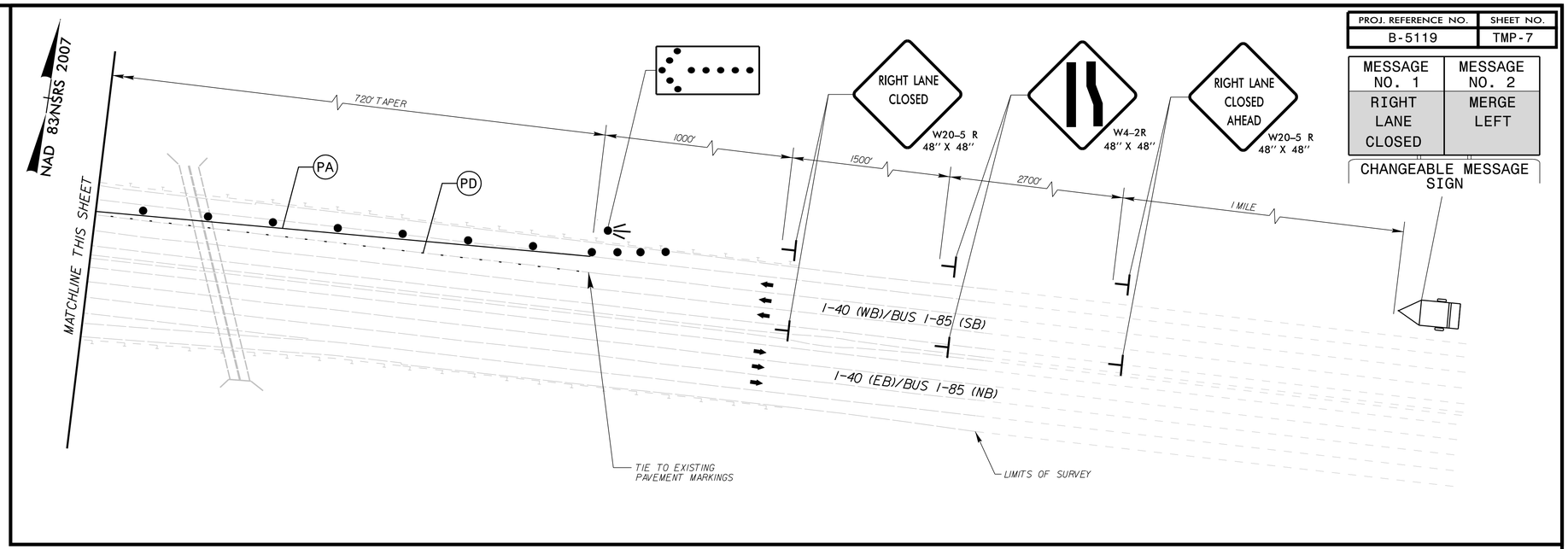

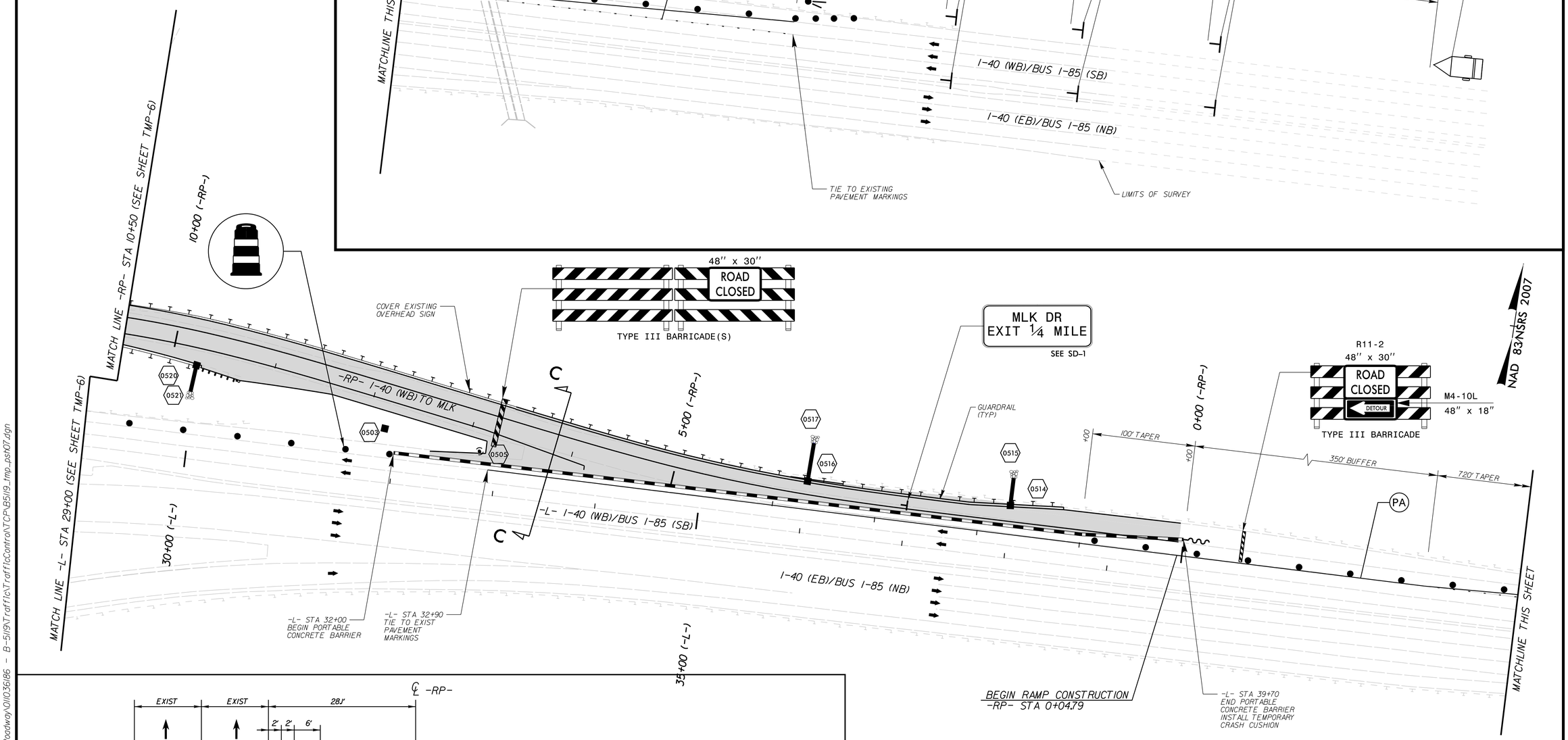

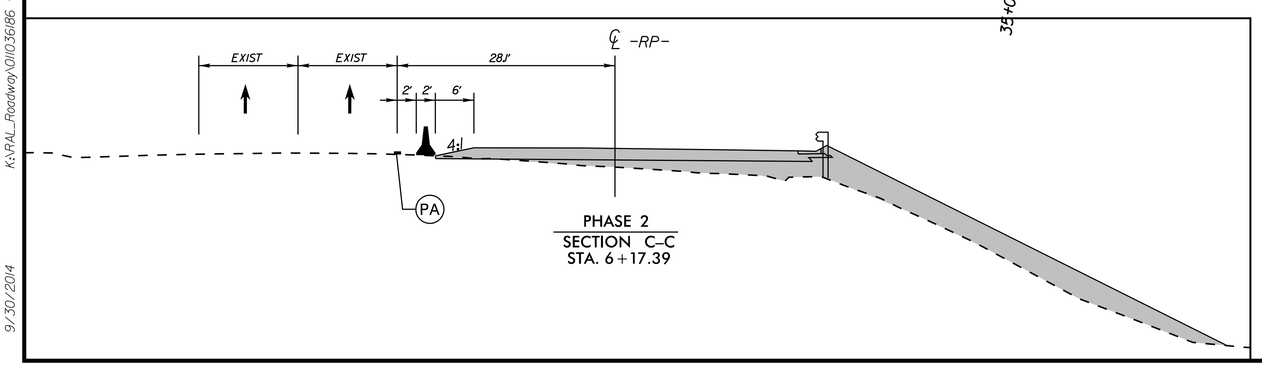

PHASE 2
SECTION C-C
STA. 6+17.39

Kimley»Horn

NEW CONSTRUCTION

APPROVED: DocuSigned by: Chadwick Beck 10/6/2014 DATE:

SEAL

NORTH CAROLINA PROFESSIONAL SEAL 34391 ENGINEER CHADWICK W. BECK

DIVISION OF HIGHWAYS STATE OF NORTH CAROLINA DEPARTMENT OF TRANSPORTATION WORK ZONE TRAFFIC CONTROL

TRAFFIC CONTROL PHASE 2

K:\RAL_Roadway\DI\0036\86 - B-5119\Traffic\TrafficControl\TCP\B5119_tmp_psh07.dgn

9/30/2014