PROJ. REFERENCE NO.	SHEET NO.
B-5119	TMP-14

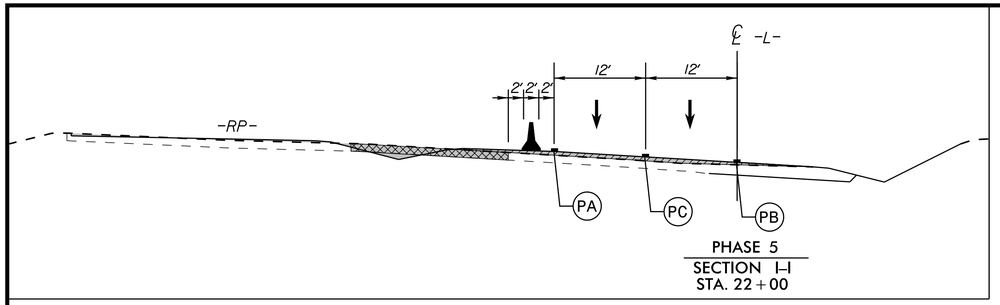

PHASE 5
SECTION I-I
STA. 22+00

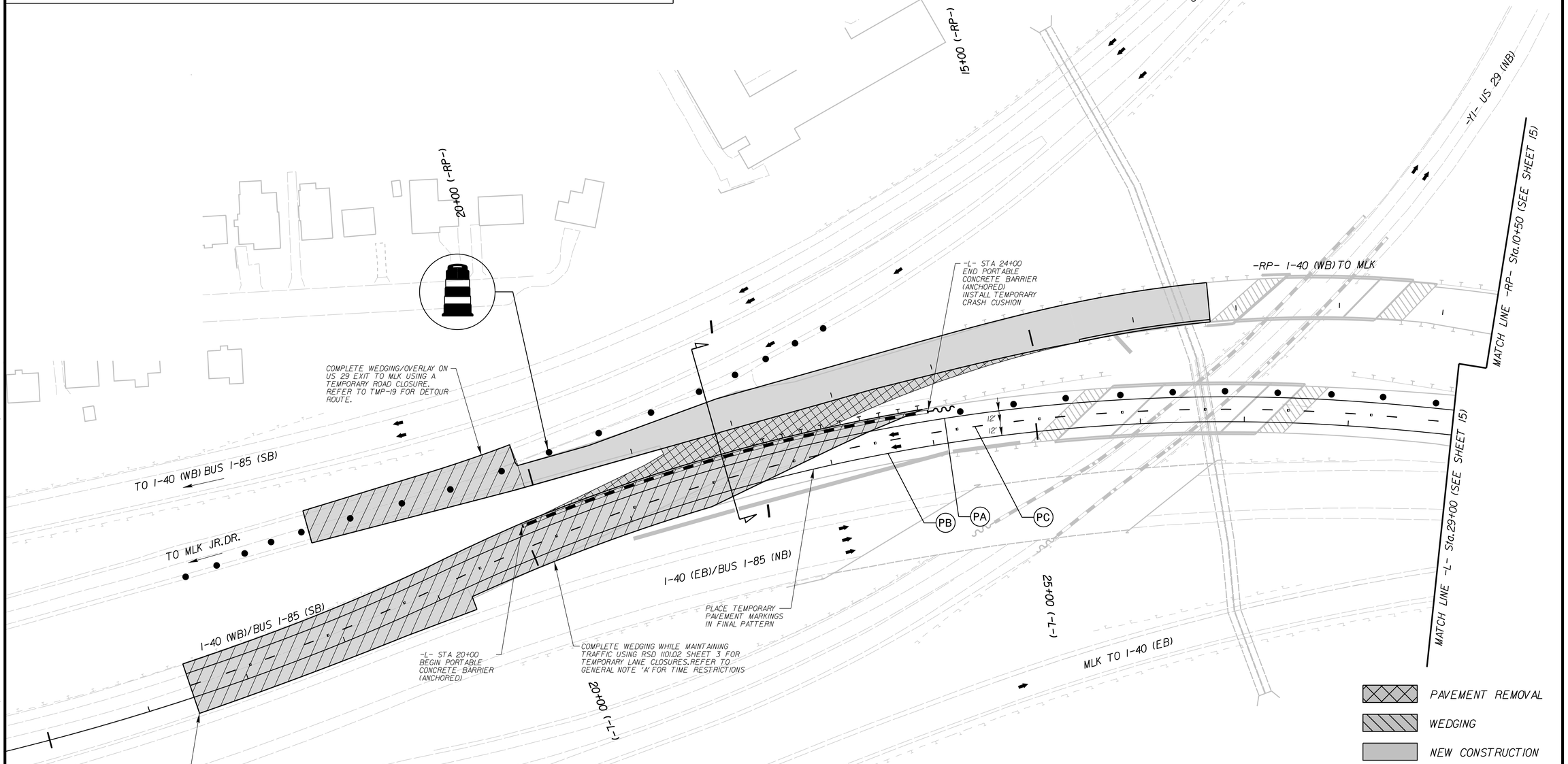

PAVEMENT REMOVAL

WEDGING

NEW CONSTRUCTION

K:\RAL_Roadway\0110036\86 - B-5119\Traffic\TrafficControl\TCP\B5119_tmp_psh14.dgn

10/6/2014

Kimley»Horn

APPROVED: DocuSigned by: Chadwick Beck 7A0F0B0B0A0F4A0... DATE: 10/6/2014

SEAL

NORTH CAROLINA PROFESSIONAL SEAL 34391 ENGINEER CHADWICK W. BECK

DIVISION OF HIGHWAYS STATE OF NORTH CAROLINA DEPARTMENT OF TRANSPORTATION WORK ZONE TRAFFIC CONTROL

TRAFFIC CONTROL PHASE 5