PROJ. REFERENCE NO.	SHEET NO.
B-5119	TMP-11

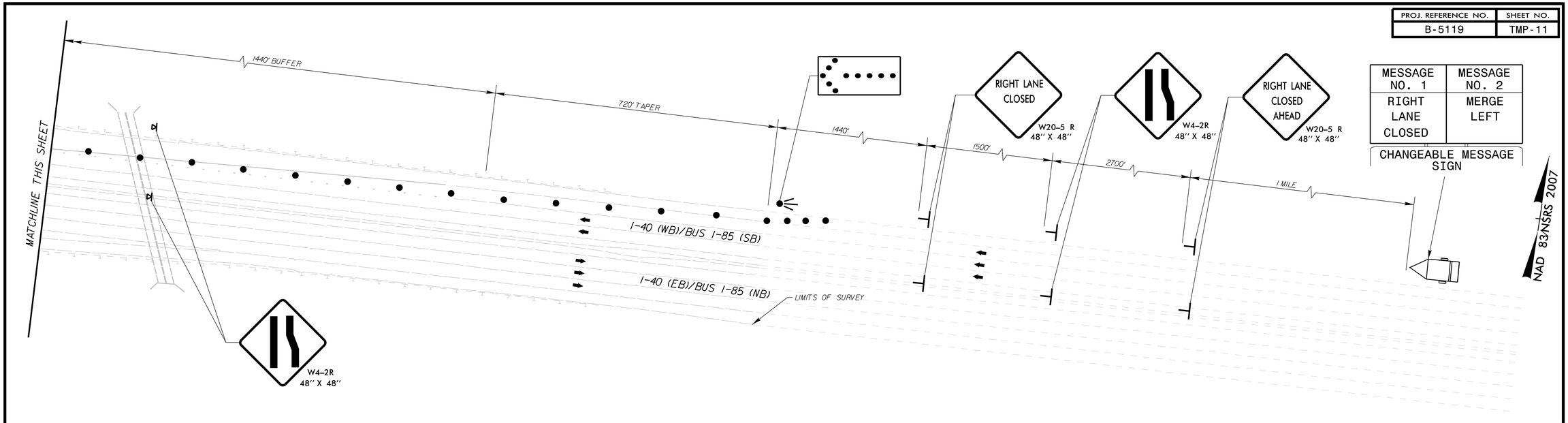

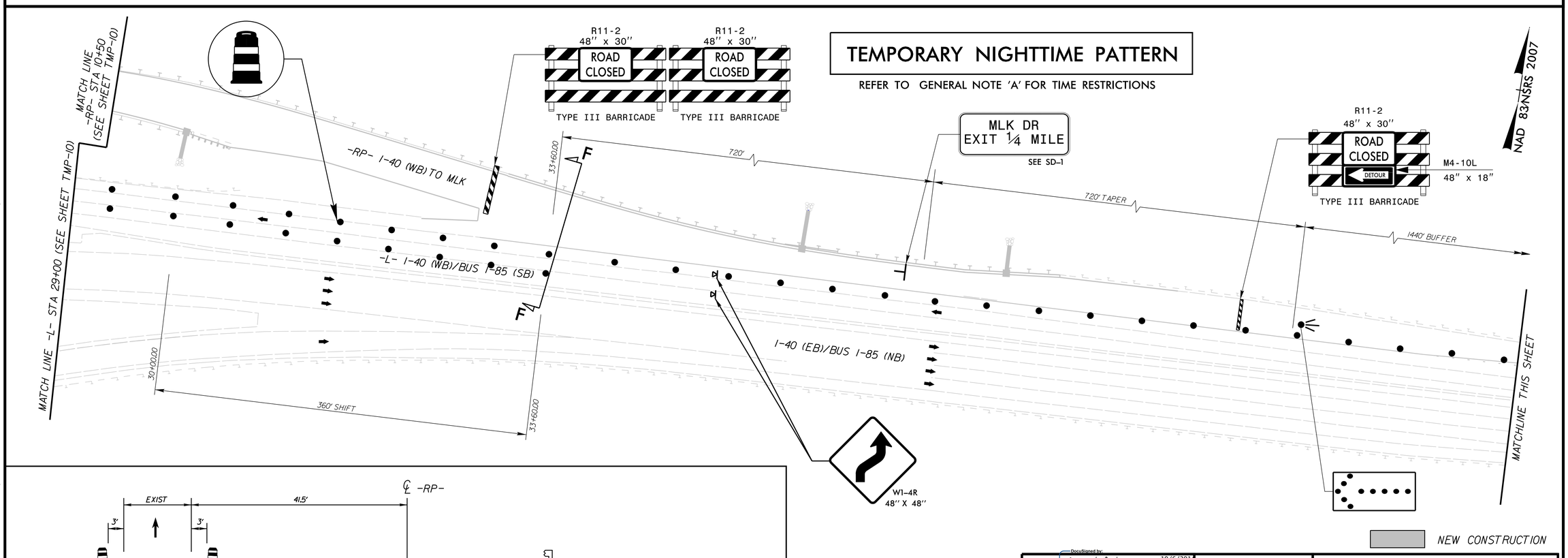

TEMPORARY NIGHTTIME PATTERN

REFER TO GENERAL NOTE 'A' FOR TIME RESTRICTIONS

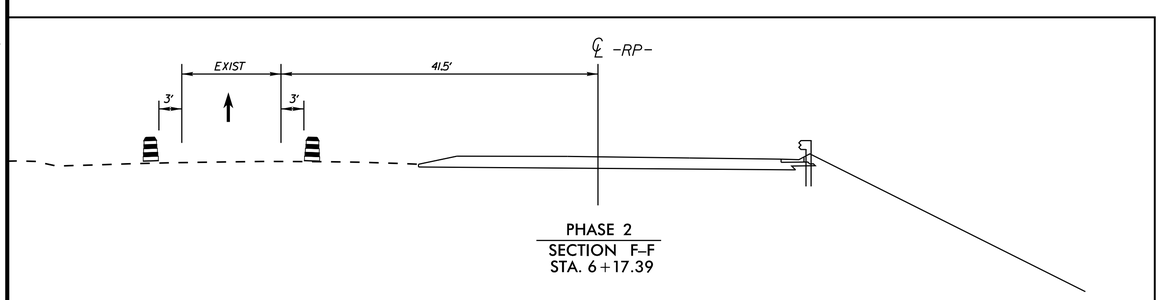

PHASE 2
SECTION F-F
STA. 6+17.39

Kimley»Horn

APPROVED: DocuSigned by: Chadwick Beck DATE: 10/6/2014

SEAL

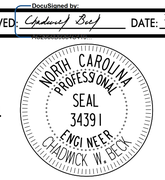

TRAFFIC CONTROL PHASE 3 STEP 4

K:\RAL_Roadway\011036\86 - B-5119\Traffic\TrafficControl\TCP\B5119_tmp_pshi1.dgn

9/30/2014