DocuSign Envelope ID: 0372A49C-F0BD-418D-B819-50438099710E

Kimley»Horn

PROJECT REFERENCE NO.	SHEET NO.
B-5119	2A-3

ROADWAY DESIGN ENGINEER
NORTH CAROLINA PROFESSIONAL SEAL 033167 ENGINEER JAMES J. ROCE
DocuSigned by: Jason Paul 12/2/2014 7FF73A34E03B47C...

PAVEMENT DESIGN ENGINEER
NORTH CAROLINA PROFESSIONAL SEAL 039819 ENGINEER ANTONYA T. HEYWARD
DocuSigned by: 12/3/2014 F3SF70...

℄ -DET1- US 421 RAMP DETOUR

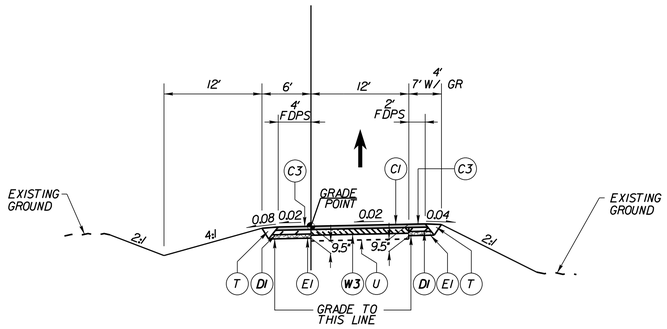

TYPICAL SECTION NO. 6

–DET1– STA 1+32.80 TO 4+70.00

℄ -DET3- US 421 RAMP DETOUR

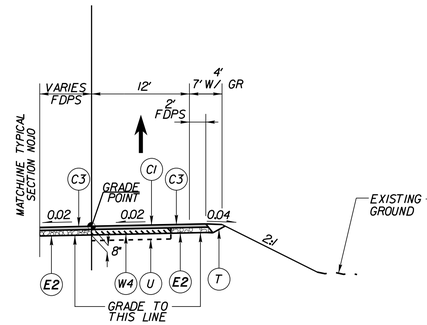

TYPICAL SECTION NO. 7

USE IN CONJUNCTION WITH TYPICAL SECTION 10

–DET3– STA 1+63.51 TO 3+30.88

℄ -DET3- US 421 RAMP DETOUR

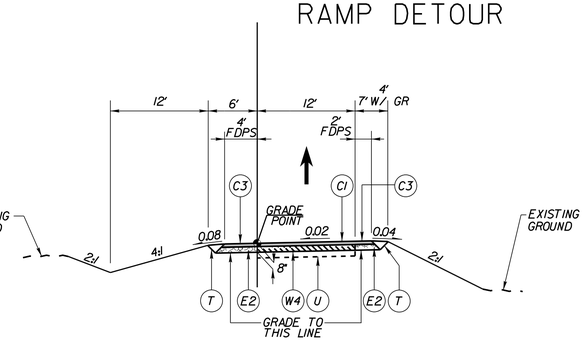

TYPICAL SECTION NO. 8

–DET3– STA 3+30.88 TO 5+00.00

℄ -DET2- I-40/I-85 DETOUR

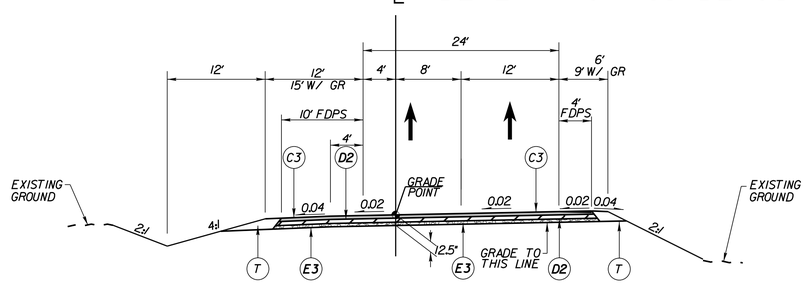

TYPICAL SECTION NO. 9

–DET2– STA 0+00.00 TO 1+65.00

℄ -DET2- I-40/I-85 DETOUR

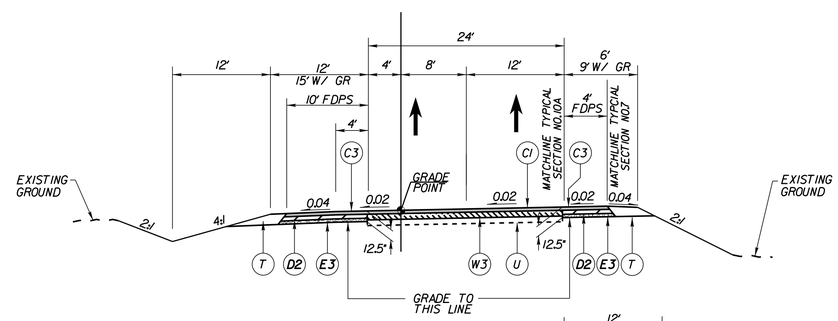

TYPICAL SECTION NO. 10

–DET2– STA 1+65.00 TO 7+71.46

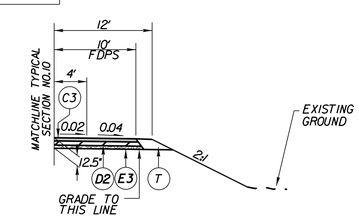

TYPICAL SECTION NO. 10A

USE IN CONJUNCTION WITH TYPICAL SECTION 10

–DET2– STA 6+38.40 TO 7+71.46 (RT)

FINAL PAVEMENT SCHEDULE

C1	1.5" TYPE S9.5C
C2	1.5" TYPE S9.5D
C3	3" TYPE S9.5C
C4	3" TYPE S9.5D
C5	VAR. DEPTH TYPE S9.5C
C6	VAR. DEPTH TYPE S9.5D
D1	2.5" TYPE I19.0C
D2	4" TYPE I19.0C
D4	VAR. DEPTH TYPE I19.0C
D5	VAR. DEPTH TYPE I19.0D
E1	4" TYPE B25.0C
E2	5" TYPE B25.0C
E3	5.5" TYPE B25.0C
E5	VAR. DEPTH TYPE B25.0C
T	EARTH MATERIAL
U	EXISTING PAVEMENT
W1	VARIABLE DEPTH ASPHALT PAVEMENT
W2	VARIABLE DEPTH ASPHALT PAVEMENT
W3	VARIABLE DEPTH ASPHALT PAVEMENT
W4	VARIABLE DEPTH ASPHALT PAVEMENT

PAVEMENT EDGE SLOPES ARE 1:1 UNLESS OTHERWISE NOTED.

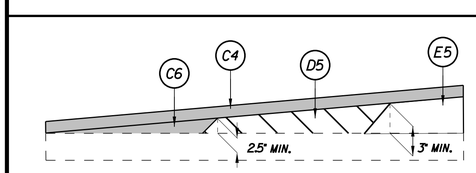

WEDGING DETAIL FOR RESURFACING W1

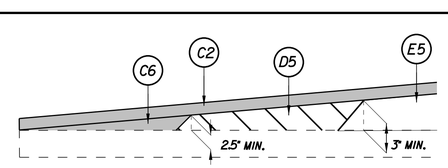

WEDGING DETAIL FOR RESURFACING W2

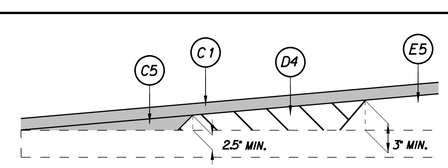

WEDGING DETAIL FOR RESURFACING W3

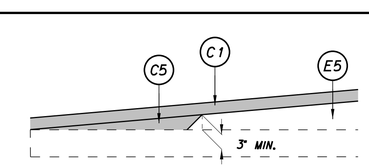

WEDGING DETAIL FOR RESURFACING W4

K:\RAL_Roadway\011036186 - B-5119\Roadway\Proj\b5119_rdy_typ.dgn

12/2/2014