DocuSign Envelope ID: 0372A49C-F0BD-418D-B819-50438099710E

Kimley»Horn

PROJECT REFERENCE NO.	SHEET NO.
B-5119	2A-1

ROADWAY DESIGN ENGINEER
NORTH CAROLINA PROFESSIONAL SEAL 033167 ENGINEER JAMES J. HACE
DocuSigned by: Jason Paul 12/2/2014 7FF73A34E03847C...

PAVEMENT DESIGN ENGINEER
12/3/2014
NORTH CAROLINA PROFESSIONAL SEAL 039819 ENGINEER ANTONIA T. HEYWARD
DocuSigned by: 7C3BF70B...

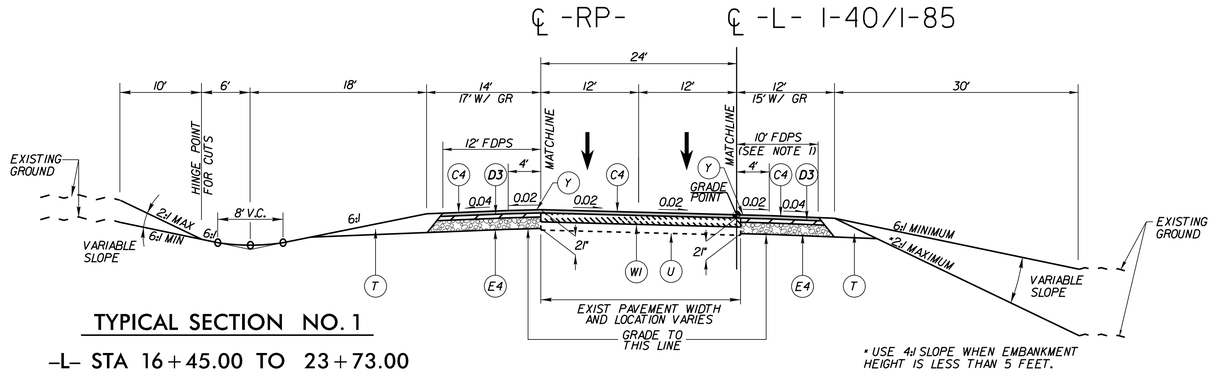

TYPICAL SECTION NO. 1

–L– STA 16+45.00 TO 23+73.00
–L– STA 31+18.00 TO 39+66.00
–RP– STA 0+04.79 TO 6+65.01

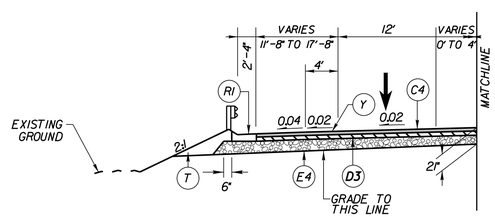

TYPICAL SECTION NO. 1A

USE IN CONJUNCTION WITH TYPICAL SECTION 1

–RP– STA 6+65.01 TO 1+19.24 (RT)

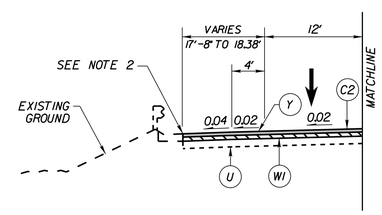

TYPICAL SECTION NO. 1B

USE IN CONJUNCTION WITH TYPICAL SECTION 1

–RP– STA 1+19.24 TO 0+04.79 (RT)

NOTES:

1. TIE PROPOSED PAVEMENT TO EXISTING DOUBLE FACED CONCRETE BARRIER FROM –L– STA 16+45.00 TO 16+95.00 AND FROM –L– STA 34+00.00 TO 39+66.00

2. USE INCIDENTAL MILLING TO TIE PROPOSED PAVEMENT TO EXISTING SHOULDER BERM GUTTER FROM –RP– STA 0+04.79 TO 1+19.24

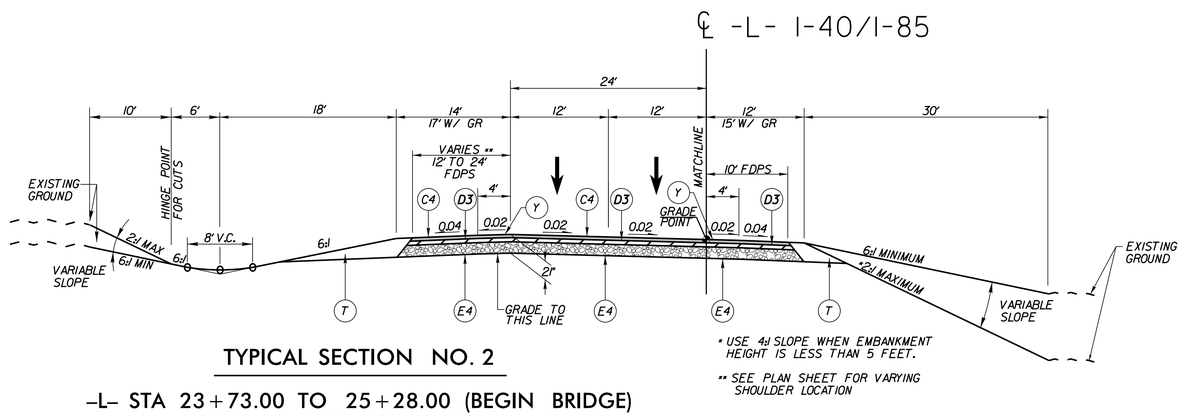

TYPICAL SECTION NO. 2

–L– STA 23+73.00 TO 25+28.00 (BEGIN BRIDGE)
–L– STA 27+27.75 (END BRIDGE) TO 31+18.00

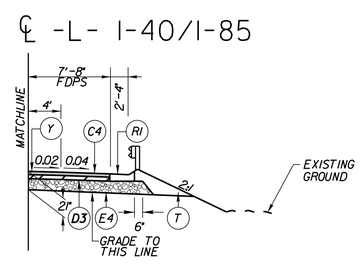

TYPICAL SECTION NO. 2A

USE IN CONJUNCTION WITH TYPICAL SECTION 2

–L– STA 24+11.50 TO 24+89.49 (RT)

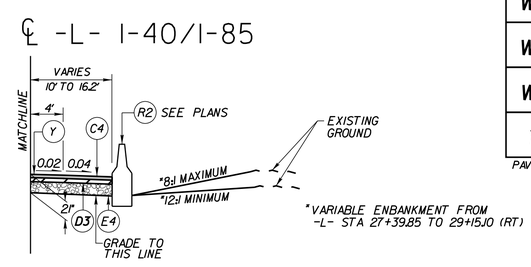

TYPICAL SECTION NO. 2B

USE IN CONJUNCTION WITH TYPICAL SECTIONS 1 & 2

–L– STA 27+39.85 TO 34+00.00 (RT)

FINAL PAVEMENT SCHEDULE

C1	PROP. APPROX. 1.5" ASPHALT CONCRETE SURFACE COURSE TYPE S9.5C. AT AN AVERAGE RATE OF 168 LBS. PER SQ. YD.
C2	PROP. APPROX. 1.5" ASPHALT CONCRETE SURFACE COURSE TYPE S9.5D. AT AN AVERAGE RATE OF 168 LBS. PER SQ. YD.
C3	PROP. APPROX. 3" ASPHALT CONCRETE SURFACE COURSE TYPE S9.5C. AT AN AVERAGE RATE OF 168 LBS. PER SQ. YD. IN EACH OF TWO LAYERS.
C4	PROP. APPROX. 3" ASPHALT CONCRETE SURFACE COURSE TYPE S9.5D. AT AN AVERAGE RATE OF 168 LBS. PER SQ. YD. IN EACH OF TWO LAYERS.
C5	PROP.VAR. DEPTH ASPHALT CONCRETE SURFACE COURSE, TYPE S9.5C. AT AN AVERAGE RATE OF 112 LBS. PER SQ.YD.PER 1" DEPTH. TO BE PLACED IN LAYERS NOT LESS THAN 1.5" IN DEPTH OR GREATER THAN 2" IN DEPTH.
C6	PROP.VAR. DEPTH ASPHALT CONCRETE SURFACE COURSE, TYPE S9.5D. AT AN AVERAGE RATE OF 112 LBS. PER SQ.YD.PER 1" DEPTH. TO BE PLACED IN LAYERS NOT LESS THAN 1.5" IN DEPTH OR GREATER THAN 2" IN DEPTH.
D1	PROP. APPROX. 2.5" ASPHALT CONCRETE INTERMEDIATE COURSE TYPE I19.0C. AT AN AVERAGE RATE OF 285 LBS. PER SQ. YD.
D2	PROP. APPROX. 4" ASPHALT CONCRETE INTERMEDIATE COURSE TYPE I19.0C. AT AN AVERAGE RATE OF 456 LBS. PER SQ. YD.
D3	PROP. APPROX. 4" ASPHALT CONCRETE INTERMEDIATE COURSE TYPE I19.0D. AT AN AVERAGE RATE OF 456 LBS. PER SQ. YD.
D4	PROP.VAR.DEPTH ASPHALT CONCRETE INTERMEDIATE COURSE,TYPE I19.0C. AT AN AVERAGE RATE OF 114 LBS.PER SQ.YD.PER 1" DEPTH TO BE PLACED IN LAYERS NOT LESS THAN 2.5" OR GREATER THAN 4" DEPTH
D5	PROP.VAR.DEPTH ASPHALT CONCRETE INTERMEDIATE COURSE,TYPE I19.0D. AT AN AVERAGE RATE OF 114 LBS.PER SQ.YD.PER 1" DEPTH TO BE PLACED IN LAYERS NOT LESS THAN 2.5" OR GREATER THAN 4" DEPTH
E1	PROP. APPROX. 4" ASPHALT CONCRETE BASE COURSE TYPE B25.0C. AT AN AVERAGE RATE OF 456 LBS. PER SQ. YD.
E2	PROP. APPROX. 5" ASPHALT CONCRETE BASE COURSE TYPE B25.0C. AT AN AVERAGE RATE OF 570 LBS. PER SQ. YD.
E3	PROP. APPROX. 5.5" ASPHALT CONCRETE BASE COURSE TYPE B25.0C. AT AN AVERAGE RATE OF 627 LBS. PER SQ. YD.
E4	PROP. APPROX. 14" ASPHALT CONCRETE BASE COURSE TYPE B25.0C. AT AN AVERAGE RATE OF 532 LBS. PER SQ. YD.IN EACH OF THREE LAYERS.
E5	PROP.VAR.DEPTH ASPHALT CONCRETE BASE COURSE,TYPE B25.0C. AT AN AVERAGE RATE OF 114 LBS.PER SQ.YD.PER 1" DEPTH TO BE PLACED IN LAYERS NOT LESS THAN 3" OR GREATER THAN 5.5" DEPTH
R1	PROPOSED SHOULDER BERM GUTTER
R2	PROPOSED DOUBLE FACED CONCRETE BARRIER (TYPE-T.T1 AND T2)
T	EARTH MATERIAL
U	EXISTING ASPHALT PAVEMENT
W1	VARIABLE DEPTH ASPHALT PAVEMENT (SEE SHEET 2A-3)
W2	VARIABLE DEPTH ASPHALT PAVEMENT (SEE SHEET 2A-3)
W3	VARIABLE DEPTH ASPHALT PAVEMENT (SEE SHEET 2A-3)
W4	VARIABLE DEPTH ASPHALT PAVEMENT (SEE SHEET 2A-3)
Y	MILLED RUMBLE STRIPS

PAVEMENT EDGE SLOPES ARE 1:1 UNLESS OTHERWISE NOTED.

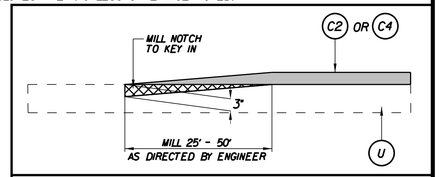

PROFILE KEY-IN DETAIL

K:\RAL_Roadway\0110361/86 – B-5119\Roadway\Proj\b5119_rdy_typ.dgn

12/2/2014