PROJECT REFERENCE NO.	SHEET NO.
R-4463AA	EC-2
R/W SHEET NO.	
ROADWAY DESIGN ENGINEER	HYDRAULICS ENGINEER

BORROW PIT DEWATERING BASIN DETAIL

GENERAL NOTES:

DETERMINE BORROW PIT DEWATERING BASIN SIZE USING V = 8.0203 * Q * T, WHERE V IS VOLUME (FT^3), Q IS PUMP FLOW RATE (GPM), AND T IS DEWATERING TIME (HR). USE MAXIMUM FLOW RATE OF 1000 GPM AND A MINIMUM DEWATERING TIME OF 2 HOURS.

RISER SHALL BE A NON-PERFORATED, SMOOTH OR CORRUGATED MATERIAL WITH A FLASHBOARD OPTION.

CONSTRUCT THE COIR FIBER BAFFLE IN ACCORDANCE WITH ROADWAY STANDARD DRAWING 1640.01 AND WITH MATERIAL THAT MEETS THE SPECIFICATIONS OF ROADWAY STANDARD 1060-14.

PROVIDE 5′ STEEL POSTS OF THE SELF-FASTENER ANGLE STEEL TYPE. INSTALL STEEL POSTS WITH NO MORE THAN 3′ OF THE POST APPEARING ABOVE THE GROUND.

ATTACH THE COIR FIBER MAT TO THE STEEL POSTS WITH WIRE OR OTHER ACCEPTABLE MEANS AND STAPLED INTO THE BOTTOM AND SIDE SLOPES OF THE BASIN WITH 12″ STAPLES.

INSTALL TYPE 2 GEOTEXTILE ON SIDESLOPES AND BOTTOM OF BASIN AT INLET AS SHOWN IN THE DETAIL.

USE THE TYPICAL SECTION SHOWN FOR THE BORROW PIT DEWATERING BASIN AS A GUIDE. THE BASIN MAY HAVE ANY TYPE CONFIGURATION AS LONG AS SUFFICIENT VOLUME IS PROVIDED AND PROVISIONS ARE MADE FOR A NON-PERFORATED RISER.

DO NOT EXCEED 3½ FT. IN HEIGHT FOR THE EARTH DIKES REQUIRED FOR BORROW PIT DEWATERING BASIN.

THE BORROW PIT DEWATERING BASIN SIZE IS VARIABLE AND DEPENDENT ON SPECIFIC SITE REQUIREMENTS AS WELL AS PROPOSED CONSTRUCTION OPERATIONS.

SUBMIT THE SIZE, LOCATION AND RISER PIPE MATERIAL FOR APPROVAL PRIOR TO CONSTRUCTION.

PUMP THE EFFLUENT INTO THE BORROW PIT DEWATERING BASIN TO A MAXIMUM DEPTH OF 6 IN. BELOW TOP OF EARTH DIKE.

PROVIDE A STONE ENERGY DISSIPATOR PAD AT THE OUTLET OF THE PUMP DISCHARGE HOSE AND OUTLET OF THE RISER BARREL IN ACCORDANCE WITH ROADWAY STANDARD DRAWING 876.02 FOR OUTLET W/O DITCH.

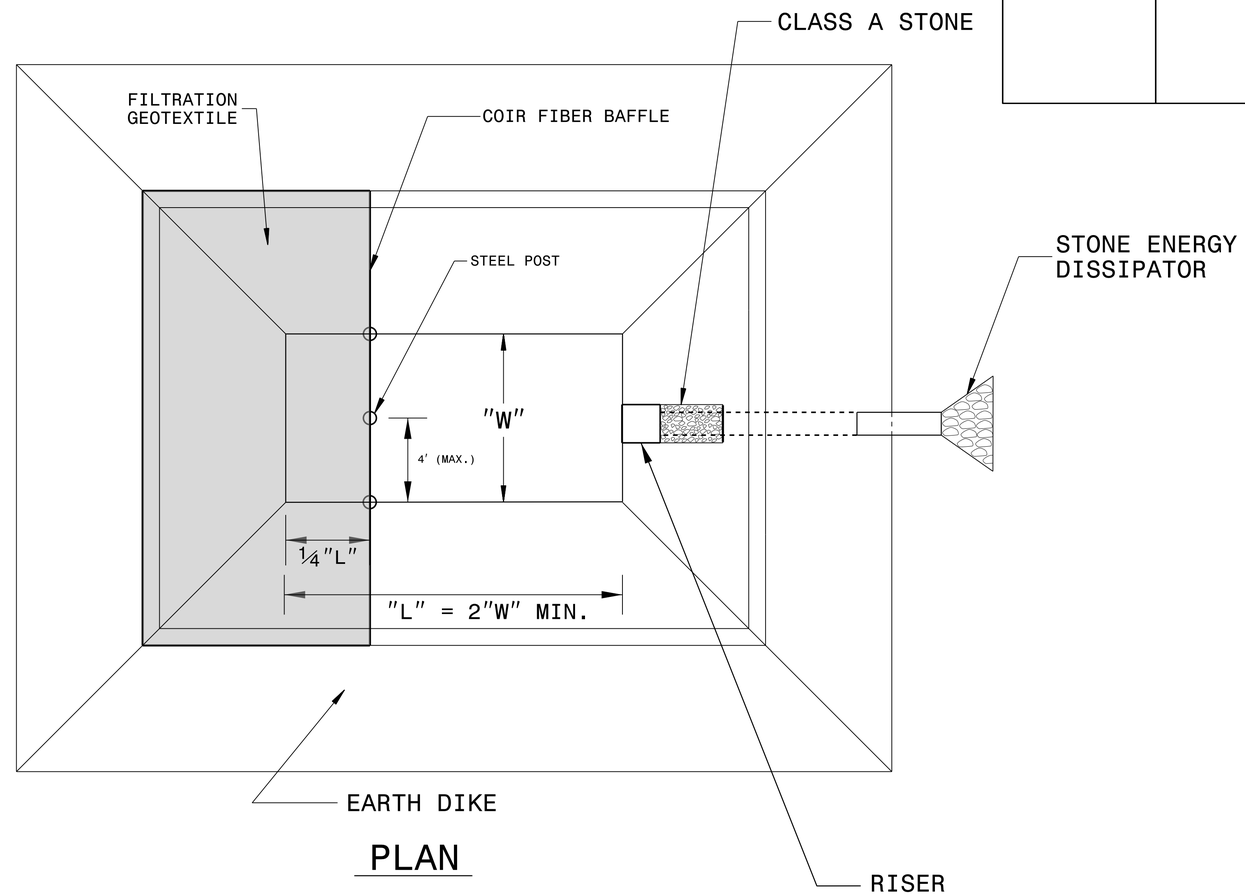

PLAN

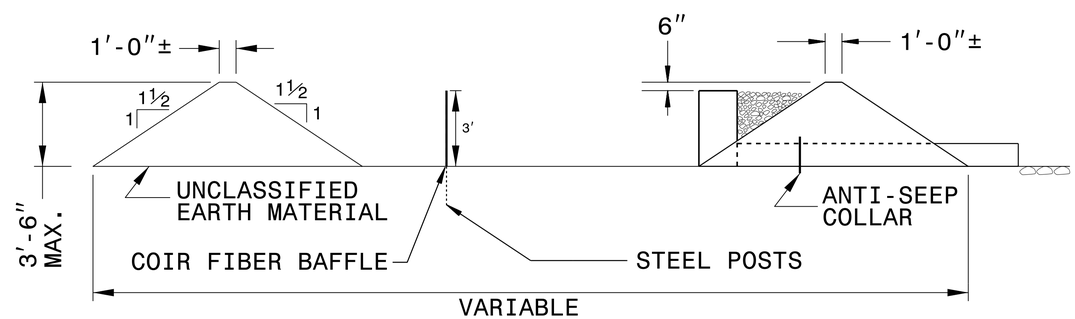

TYPICAL SECTION VIEW

NOT TO SCALE