PROJECT REFERENCE NO.	SHEET NO.
R-4463AA	2A-1

ROADWAY DESIGN ENGINEER — NORTH CAROLINA PROFESSIONAL SEAL 19724 ENGINEER DAVID BURKE EVANS — DocuSigned by: Burke Evans 10/18/2014

PAVEMENT DESIGN ENGINEER — NORTH CAROLINA PROFESSIONAL SEAL 022896 ENGINEER CLARK S. MORRISON — DocuSigned by: Clark S Morrison 10/20/2014

M A Engineering Consultants, Inc. NC License: F-0160
598 East Chatham Street Suite 137 Cary, NC 27511
Phone: 919.297.0220 Fax: 919.297.0221

PAVEMENT SCHEDULE

(FINAL PAVEMENT DESIGN 01/07/2014)

C	PROP. APPROX. 3.0" ASPHALT CONCRETE SURFACE COURSE, TYPE S9.5B, AT AN AVERAGE RATE OF 168 Lbs PER SQUARE YARD IN EACH OF TWO LAYERS.
D	PROP. APPROX. 2.5" ASPHALT CONCRETE INTERMEDIATE COURSE, TYPE I19.0B, AT AN AVERAGE RATE OF 285 Lbs. PER SQUARE YARD.
J	PROP. 8" AGGREGATE BASE COURSE.
T	EARTH MATERIAL

PAVEMENT EDGE SLOPES ARE 1:1 UNLESS SHOWN OTHERWISE.

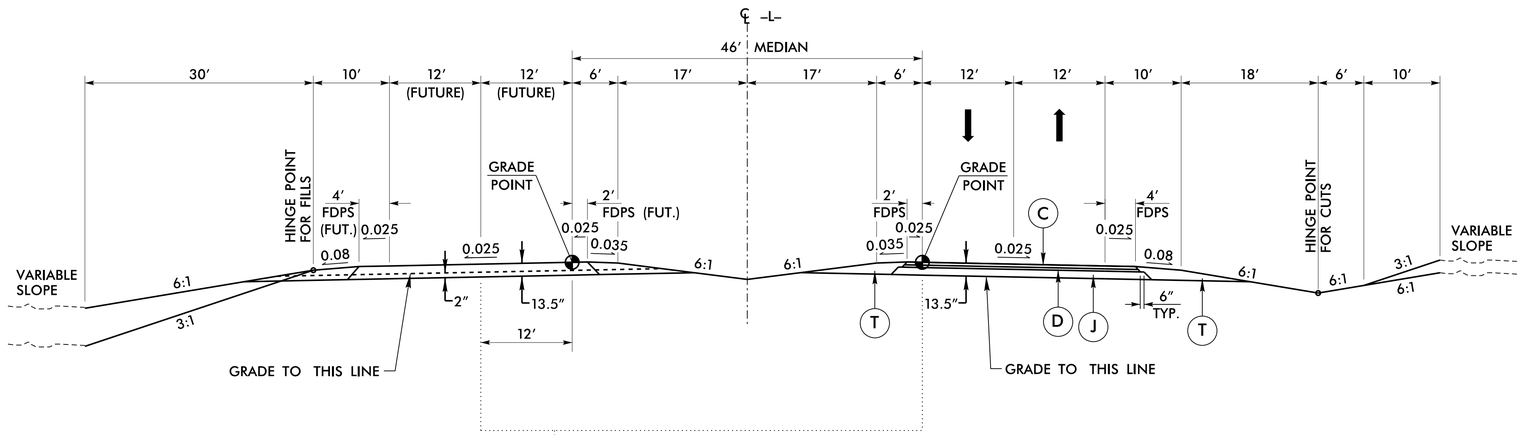

NOTE: -L1- ALIGNMENT TRANSITIONS FROM -L- NB EOT TO -L- SB CENTER OF FUTURE TRAVEL LANES.

TYPICAL SECTION #1

USE TYPICAL SECTION NO. 1:

FROM -L- LT STA. 13+92.69 TO STA. 52+46.91 (SB LANES - GRADING ONLY)
FROM -L- RT STA. 13+33.22 TO STA. 52+45.95 (NB LANES)

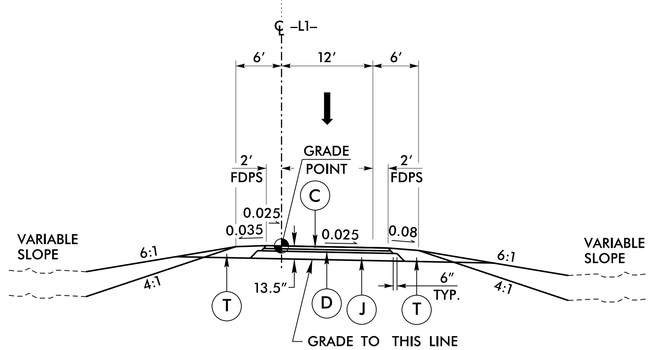

TYPICAL SECTION #1A

USE TYPICAL SECTION NO. 1A IN CONJUNCTION WITH TYPICAL SECTION NO. 1:

FROM -L1- STA. 10+00.00 TO STA. 25+12.37

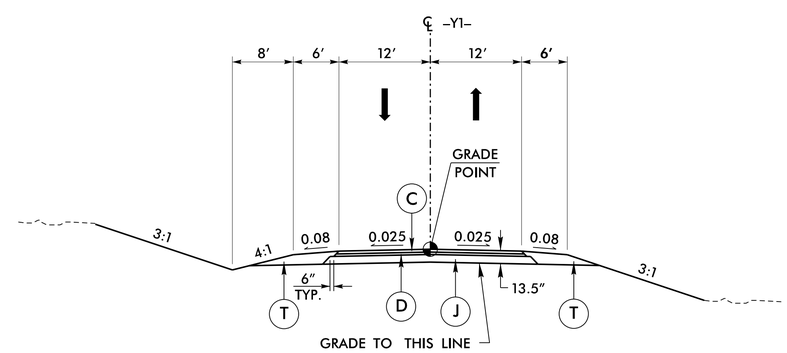

TYPICAL SECTION #2

USE TYPICAL SECTION NO. 2:

FROM -Y1- STA. 12+65.00 TO STA. 17+24.11
FROM -Y1- STA. 17+49.26 TO STA. 21+00.00

7/2/99

9/26/2014
R-4463AA\proj\R4463AA_rdy_typ.dgn
PM