DocuSign Envelope ID: 4D35B7B8-894A-446C-B7EF-8406BDBBEF66

NOTES

FOR LOCATION OF ANCHOR BOLTS AND ANCHOR PLATES EMBEDDED IN EXTERIOR CORED SLAB UNITS, SEE "RAIL POST SPACINGS AND END OF RAIL DETAILS" SHEET.

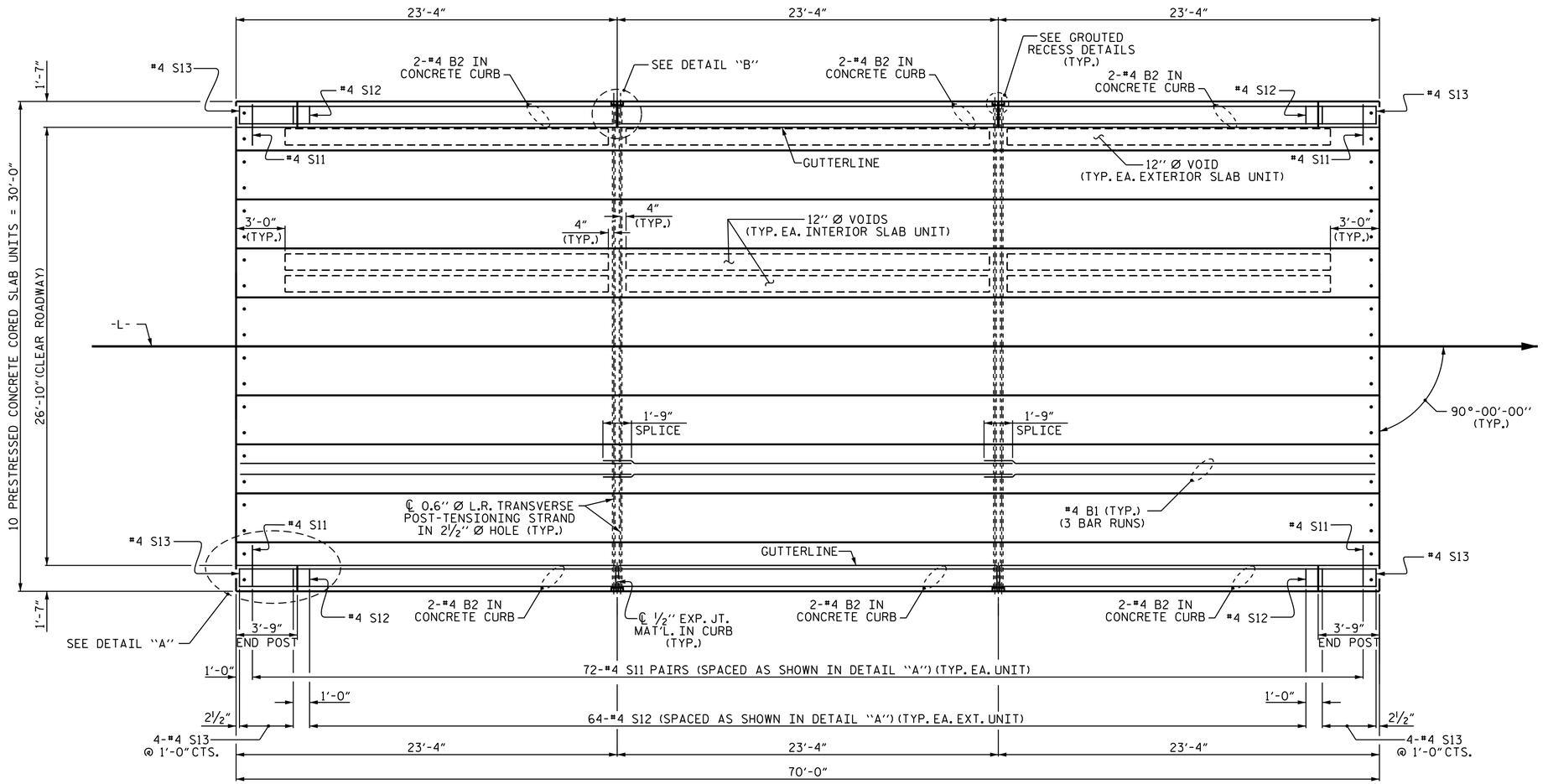

PLAN OF SPAN A

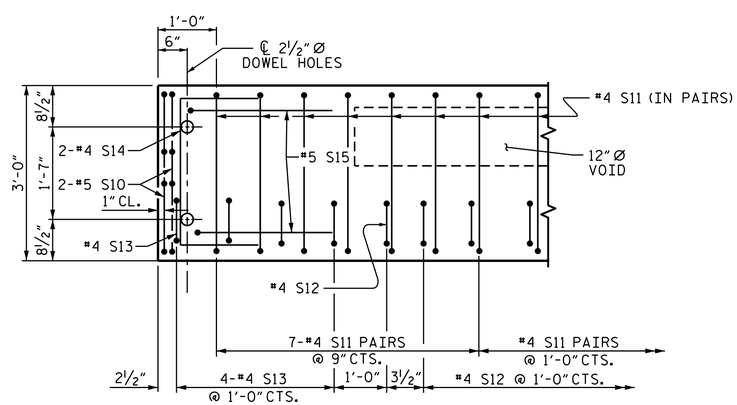

DETAIL "A"

NOTE: EXTERIOR UNIT SHOWN - INTERIOR UNIT SIMILAR EXCEPT OMIT #4 S12 AND #4 S13 BARS.

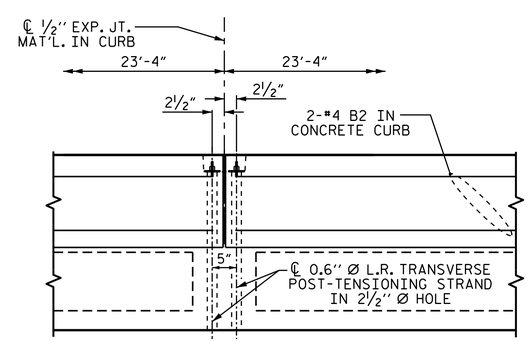

DETAIL "B"

#4 S11 BARS MAY BE SHIFTED AS NECESSARY TO MAINTAIN 1" CLEAR TO GROUTED RECESS AND 2½" Ø TRANSVERSE POST-TENSIONING STRAND HOLES

NORTH CAROLINA PROFESSIONAL SEAL 14855 ENGINEER DOUGLAS R. CALHOUN

DocuSigned by: Douglas R. Calhoun 12EFE12F0292440... 11/21/2014

PROJECT NO. B-4953

ALAMANCE COUNTY

STATION: 16+02.00 -L-

SHEET 2 OF 4

STATE OF NORTH CAROLINA
DEPARTMENT OF TRANSPORTATION
RALEIGH

PLAN OF 70' UNIT 26'-10" CLEAR ROADWAY 90° SKEW

REVISIONS								SHEET NO.
NO.	BY:	DATE:		NO.	BY:	DATE:		S-6
1				3				TOTAL SHEETS
2				4				16

ASSEMBLED BY : T. L. AVERETTE	DATE : 9-04-14		
CHECKED BY : D. R. CALHOUN	DATE : 9-12-14		
DRAWN BY : MAA	6/10	REV. 12/5/11	MAA/AAC
CHECKED BY : MKT	7/10	REV. 8/14	MAA/TMG

19-NOV-2014 14:24
R:\Structures\Plans\b4953_sd_cs.dgn
asorsenginh

STD. NO. 24PCS_30_90S_70L