DocuSign Envelope ID: 4D35B7B8-894A-446C-B7EF-8406BDBBEF66

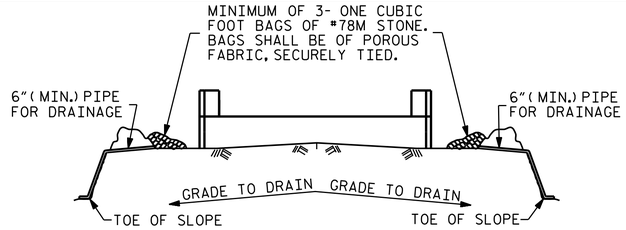

BAGGED STONE AND PIPE SHALL BE PLACED IMMEDIATELY AFTER COMPLETION OF END BENT EXCAVATION. PIPE MAY BE EITHER CONCRETE, CORRUGATED STEEL, CORRUGATED ALUMINUM ALLOY, OR CORRUGATED PLASTIC. PERFORATED PIPE WILL NOT BE ALLOWED.

BAGGED STONE SHALL REMAIN IN PLACE UNTIL THE ENGINEER DIRECTS THAT IT BE REMOVED. THE CONTRACTOR SHALL REMOVE AND DISPOSE OF SILT ACCUMULATIONS AT BAGGED STONE WHEN SO DIRECTED BY THE ENGINEER. BAGS SHALL BE REMOVED AND REPLACED WHENEVER THE ENGINEER DETERMINES THAT THEY HAVE DETERIORATED AND LOST THEIR EFFECTIVENESS.

NO SEPARATE PAYMENT WILL BE MADE FOR THIS WORK AND THE ENTIRE COST OF THIS WORK SHALL BE INCLUDED IN THE UNIT CONTRACT PRICE BID FOR THE SEVERAL PAY ITEMS.

TEMPORARY DRAINAGE AT END BENT

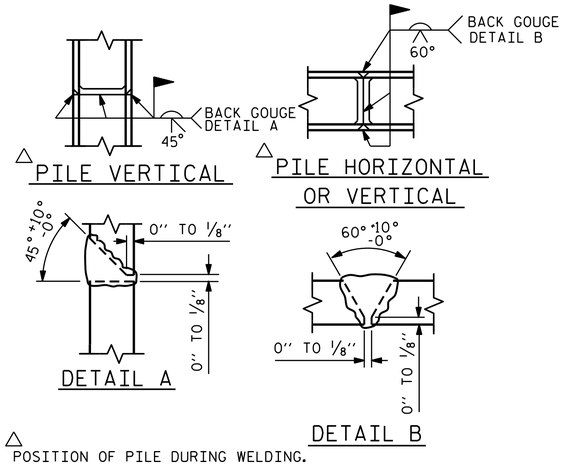

△ POSITION OF PILE DURING WELDING.

PILE SPLICE DETAILS

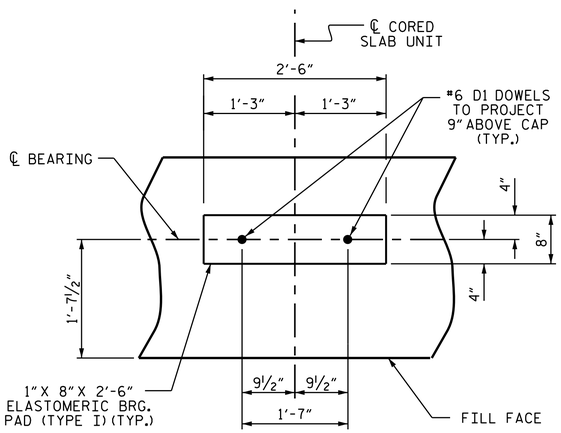

DETAIL "A"

(END BENT No. 1 SHOWN, END BENT No. 2 SIMILAR BY ROTATION)

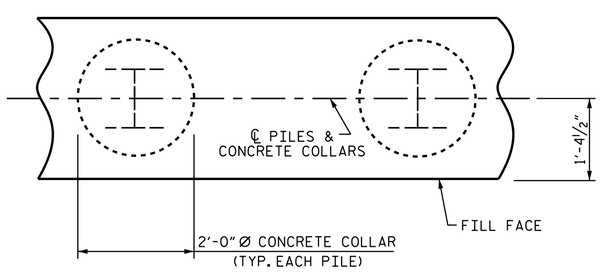

PLAN

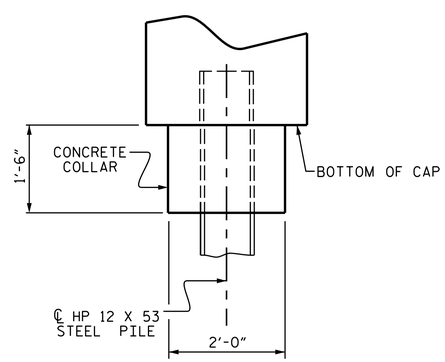

ELEVATION

CORROSION PROTECTION FOR STEEL PILES DETAIL

(END BENT No. 1 SHOWN, END BENT No. 2 SIMILAR BY ROTATION)

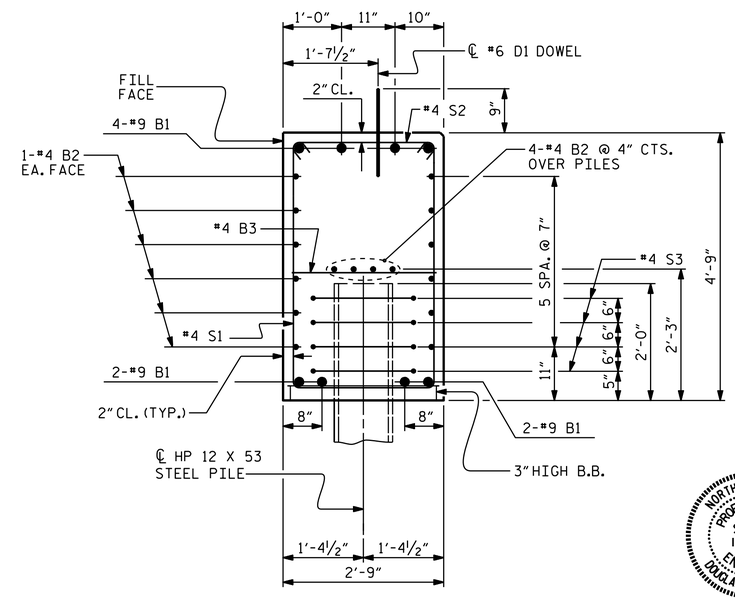

SECTION A-A

(CONCRETE COLLAR NOT SHOWN FOR CLARITY. SEE "CORROSION PROTECTION FOR STEEL PILES DETAIL.")

BAR TYPES

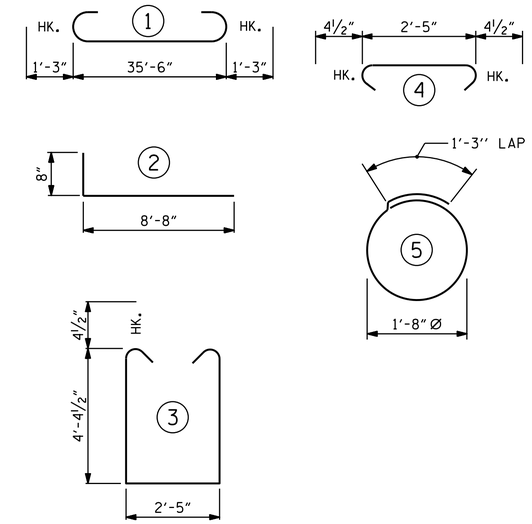

ALL BAR DIMENSIONS ARE OUT TO OUT.

END BENT No. 1	END BENT No. 2
HP 12 X 53 STEEL PILES	HP 12 X 53 STEEL PILES
NO: 5 LIN. FT.= 50	NO: 5 LIN. FT.= 50
PILE EXCAVATION IN SOIL LIN. FT.= 46	PILE EXCAVATION IN SOIL LIN. FT.= 7
PILE EXCAVATION NOT IN SOIL LIN. FT.= 4	PILE EXCAVATION NOT IN SOIL LIN. FT.= 43

BILL OF MATERIAL FOR ONE END BENT

BAR	NO.	SIZE	TYPE	LENGTH	WEIGHT
B1	8	#9	1	38'-0"	1034
B2	32	#4	STR	19'-1"	408
B3	9	#4	STR	2'-5"	15
D1	20	#6	STR	1'-6"	45
H1	44	#4	2	9'-4"	274
K1	16	#4	STR	3'-5"	37
S1	46	#4	3	11'-11"	366
S2	46	#4	4	3'-2"	97
S3	20	#4	5	6'-6"	87
V1	52	#4	STR	6'-11"	240

REINFORCING STEEL (FOR ONE END BENT) 2603 LBS.

CLASS A CONCRETE BREAKDOWN (FOR ONE END BENT)

POUR #1 CAP, LOWER PART OF WINGS & COLLARS 21.2 C.Y.

POUR #2 UPPER PART OF WINGS 2.4 C.Y.

TOTAL CLASS A CONCRETE 23.6 C.Y.

PROJECT NO. B-4953

ALAMANCE COUNTY

STATION: 16+02.00 -L-

SHEET 4 OF 4

STATE OF NORTH CAROLINA
DEPARTMENT OF TRANSPORTATION
RALEIGH

SUBSTRUCTURE

END BENT No. 1 & 2 DETAILS

NORTH CAROLINA PROFESSIONAL SEAL 14855 ENGINEER DOUGLAS R. CALHOUN

DocuSigned by: Douglas R. Calhoun 12EF5425D0D4410... 11/21/2014

REVISIONS						
NO.	BY:	DATE:	NO.	BY:	DATE:	
1			3			
2			4			

SHEET NO. S-15

TOTAL SHEETS 16

ASSEMBLED BY : S. B. WILLIAMS DATE : 5-13
CHECKED BY : Fr. LEA DATE : 5-22-13

DRAWN BY : WJH 12/11
CHECKED BY : AAC 12/11

19-NOV-2014 14:29
R:\Structures\Plans\b4953_sd_cs.dgn
asorsenginh

STD. NO. EB_30_90S4