DocuSign Envelope ID: 4D35B7B8-894A-446C-B7EF-8406BDBBEF66

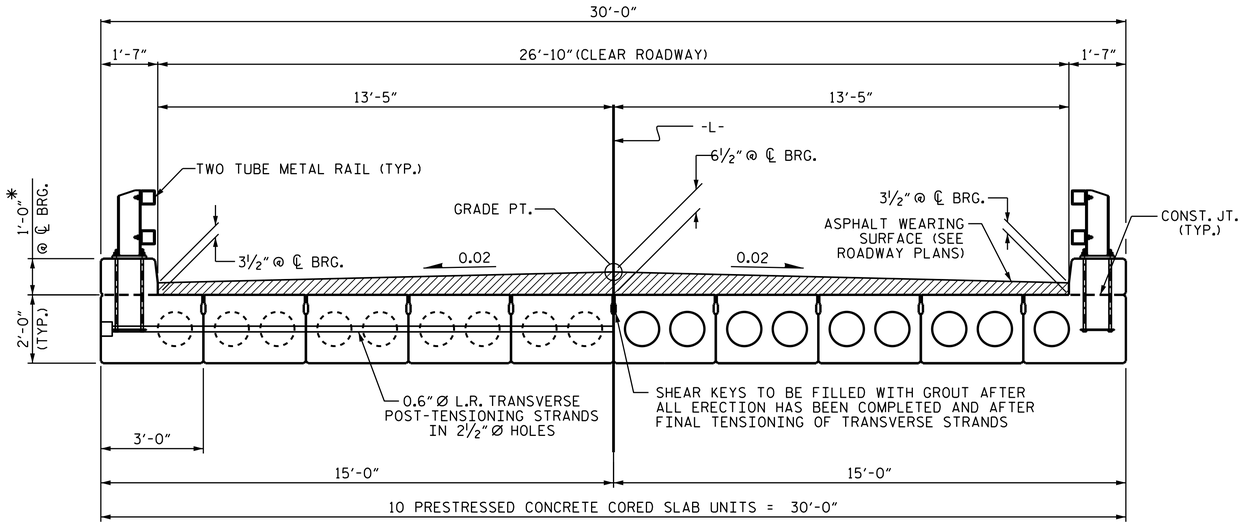

HALF SECTION
AT INTERMEDIATE DIAPHRAGMS

HALF SECTION
THROUGH VOIDS

TYPICAL SECTION

* - THE MAXIMUM CURB HEIGHT AND ASPHALT THICKNESS IS SHOWN. THE HEIGHT OF THE CURB AND ASPHALT THICKNESS VARIES WHILE THE TOP OF THE CURB FOLLOWS THE PROFILE OF THE GUTTERLINE. FOR CURB HEIGHT DETAILS AND ASPHALT THICKNESS, SEE SHEET 3 OF 4.

FIXED END

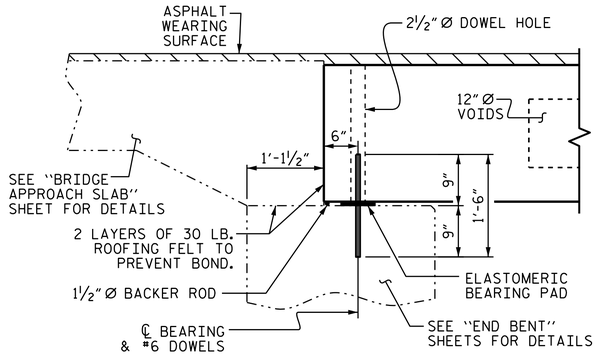

SECTION AT END BENT

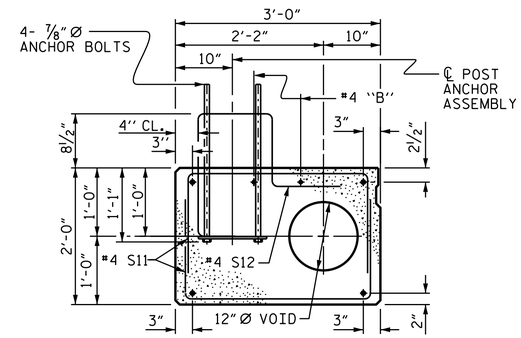

EXTERIOR SLAB SECTION

(FOR PRESTRESSED STRAND LAYOUT, SEE INTERIOR SLAB SECTION.)

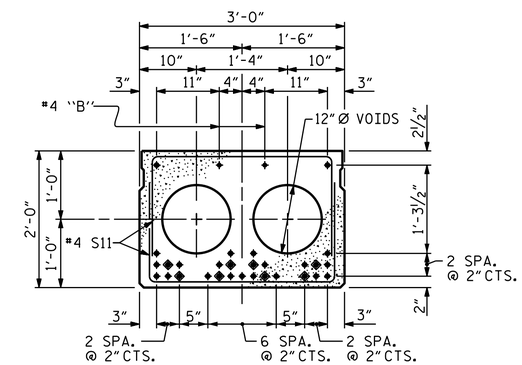

INTERIOR SLAB SECTION (70' UNIT)

(29 STRANDS REQUIRED)

0.6'' Ø LOW RELAXATION STRAND LAYOUT

◆ BOND SHALL BE BROKEN ON THESE STRANDS FOR A DISTANCE OF 12'-0" FROM END OF CORED SLAB UNIT. SEE STANDARD SPECIFICATIONS, ARTICLE 1078-7.

DEBONDING LEGEND

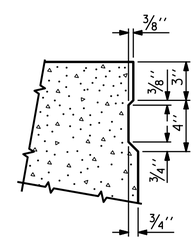

SHEAR KEY DETAIL

NOTE: OMIT SHEAR KEY ON OUTSIDE FACE OF EXTERIOR CORED SLABS.

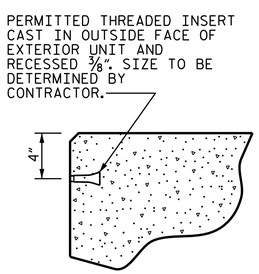

THREADED INSERT DETAIL

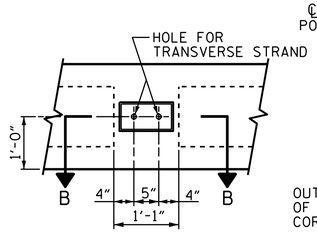

ELEVATION VIEW

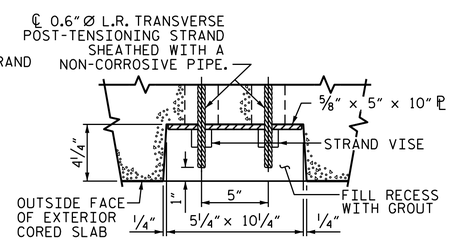

SECTION B-B

GROUTED RECESS AT END OF POST-TENSIONED STRAND•CORED SLABS

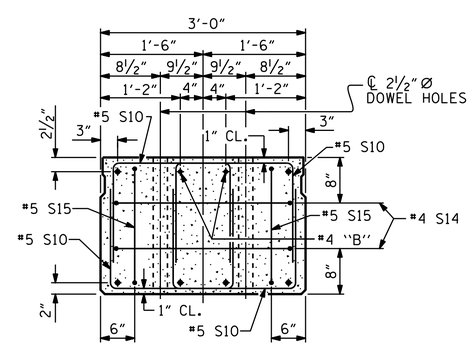

END ELEVATION

SHOWING PLACEMENT OF DOUBLE STIRRUPS AND LOCATION OF DOWEL HOLES. (STRAND LAYOUT NOT SHOWN.) INTERIOR SLAB UNIT SHOWN-EXTERIOR SLAB UNIT SIMILAR EXCEPT SHEAR KEY LOCATION.

PROJECT NO. B-4953
ALAMANCE COUNTY
STATION: 16+02.00 -L-

SHEET 1 OF 4

STATE OF NORTH CAROLINA
DEPARTMENT OF TRANSPORTATION
RALEIGH

STANDARD

3'-0'' X 2'-0'' PRESTRESSED CONCRETE CORED SLAB UNIT

NORTH CAROLINA PROFESSIONAL SEAL 14855 ENGINEER DOUGLAS R. CALHOUN

DocuSigned by: Douglas R. Calhoun
11/21/2014

ASSEMBLED BY : T. L. AVERETTE	DATE : 9-04-14		
CHECKED BY : D. R. CALHOUN	DATE : 9-12-14		
DRAWN BY : MAA 6/10	REV. 12/11	MAA/AAC	
CHECKED BY : MKT 7/10	REV. 8/14	MAA/TMG	

REVISIONS						SHEET NO.
NO.	BY:	DATE:	NO.	BY:	DATE:	S-5
1			3			TOTAL SHEETS
2			4			16

19-NOV-2014 14:23
R:\Structures\Plans\b4953_sd_cs.dgn
asorsenginh

STD. NO. 24PCS4_30_90S