DocuSign Envelope ID: 4D35B7B8-894A-446C-B7EF-8406BDBBEF66

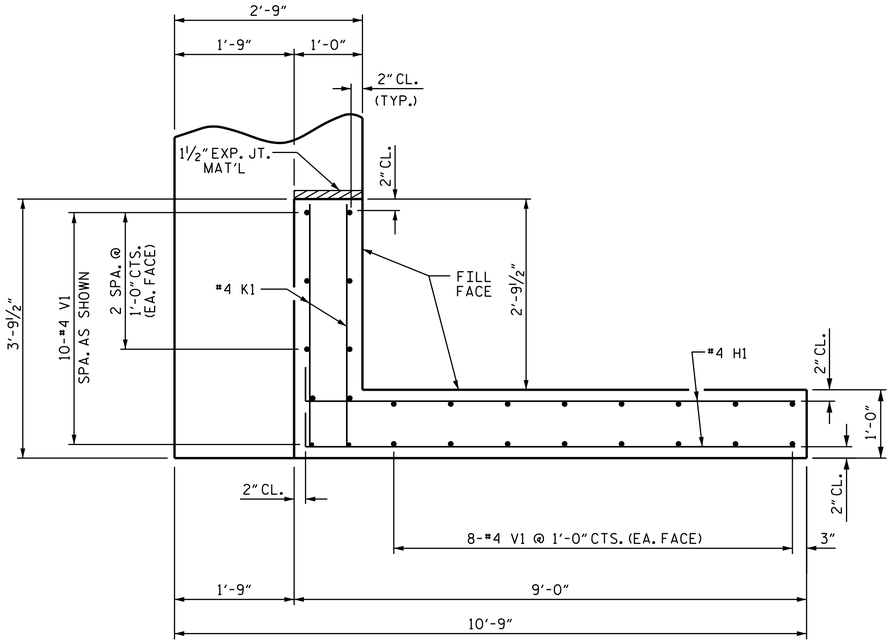

PLAN OF WING (W1)

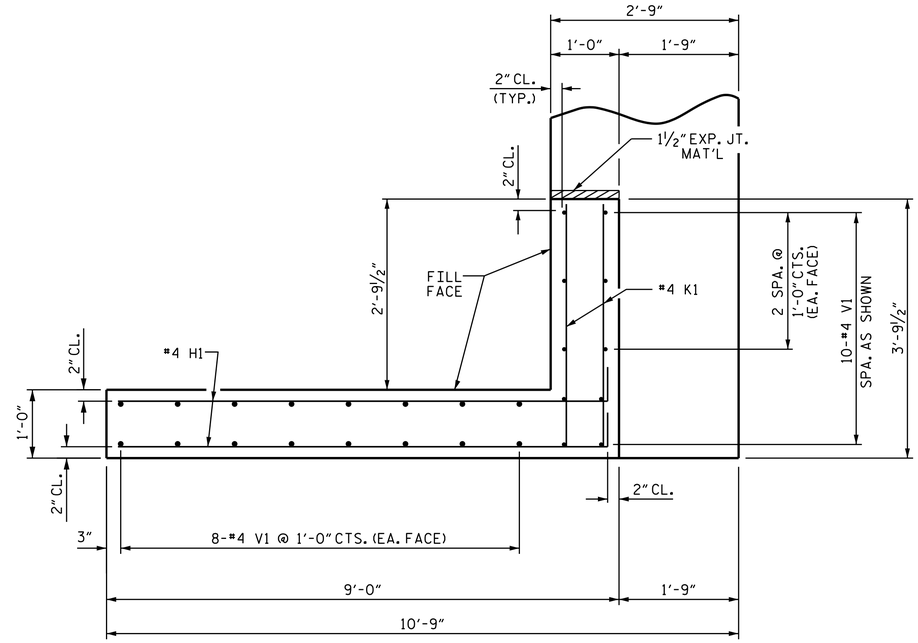

PLAN OF WING (W2)

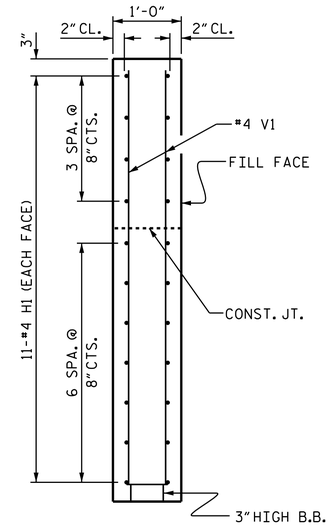

SECTION X-X

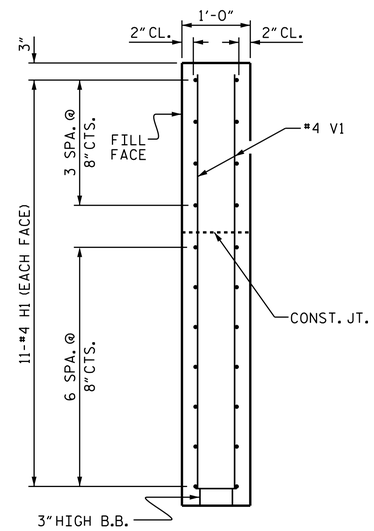

SECTION Y-Y

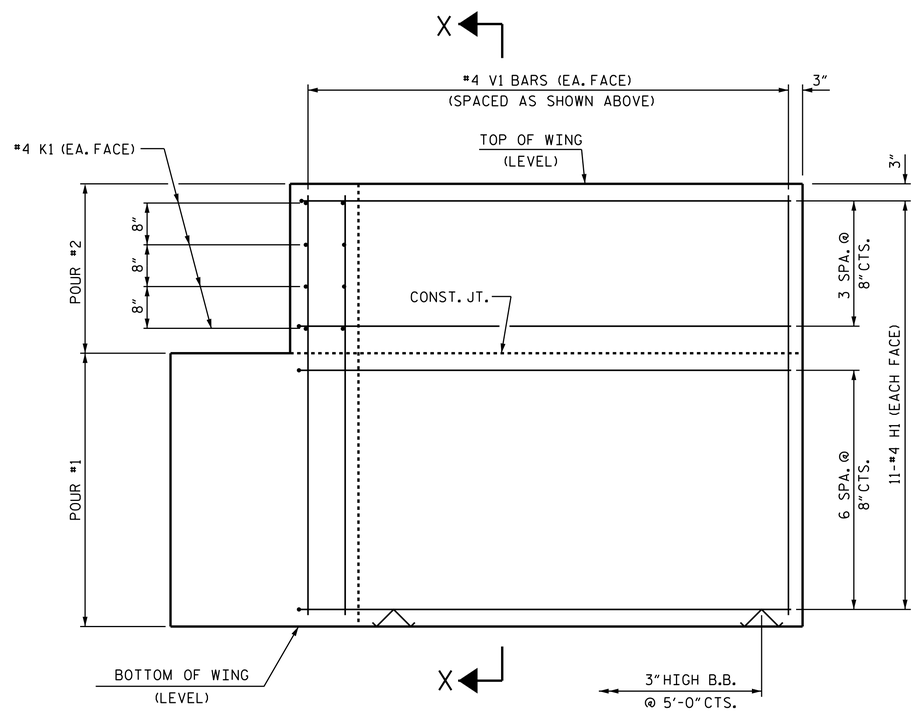

ELEVATION OF WING (W1)

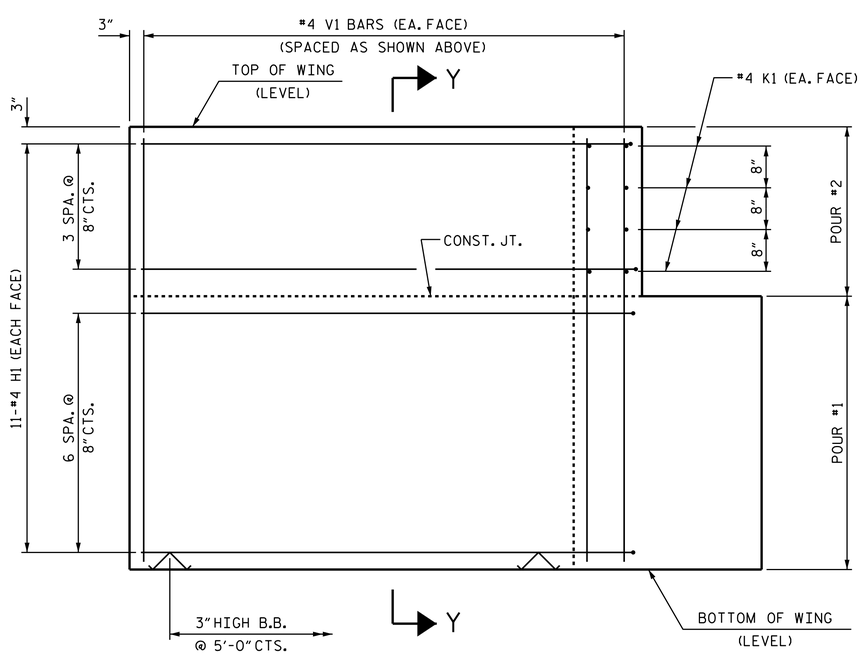

ELEVATION OF WING (W2)

WING DETAILS

NORTH CAROLINA PROFESSIONAL SEAL 14855 ENGINEER DOUGLAS R. CALHOUN

DocuSigned by: Douglas R. Calhoun
11/21/2014

PROJECT NO. B-4953
ALAMANCE COUNTY
STATION: 16+02.00 -L-

SHEET 3 OF 4

STATE OF NORTH CAROLINA
DEPARTMENT OF TRANSPORTATION
RALEIGH

SUBSTRUCTURE
END BENT
WING DETAILS

ASSEMBLED BY : S. B. WILLIAMS	DATE : 5-13
CHECKED BY : Fr. LEA	DATE : 5-17-13
DRAWN BY : WJH 12/11	
CHECKED BY : AAC 12/11	

REVISIONS						SHEET NO.
NO.	BY:	DATE:	NO.	BY:	DATE:	S-14
1			3			TOTAL SHEETS
2			4			16

19-NOV-2014 14:29
R:\Structures\Plans\b4953_sd_cs.dgn
asorsenginh

STD. NO. EB_30_90S4