DocuSign Envelope ID: 4D35B7B8-894A-446C-B7EF-8406BDBBEF66

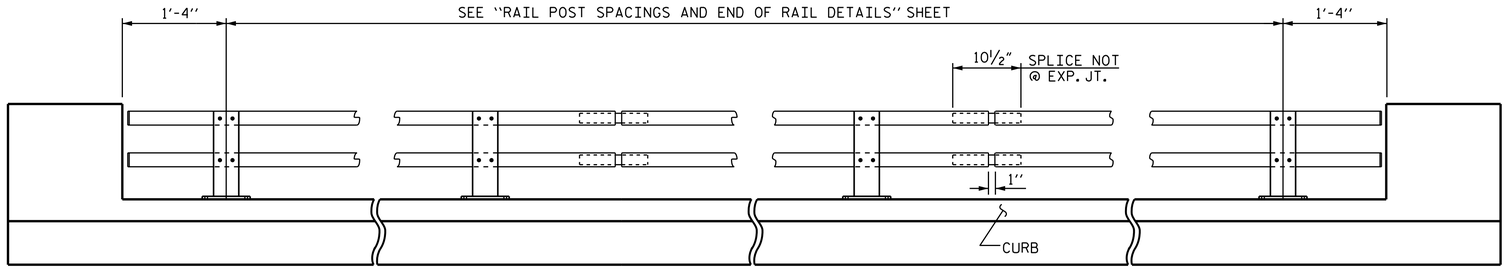

ELEVATION

NOTE : FOR ATTACHMENT OF METAL RAIL TO END POST, SEE STANDARD NO. BMR9.

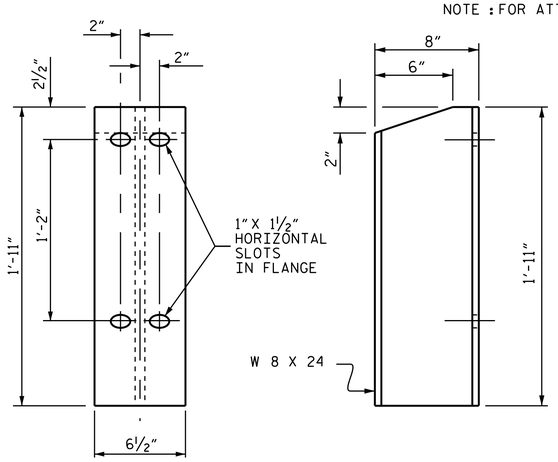

FRONT ELEVATION

SIDE ELEVATION

DETAILS OF POST

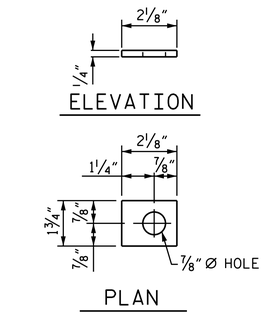

PLATE WASHER

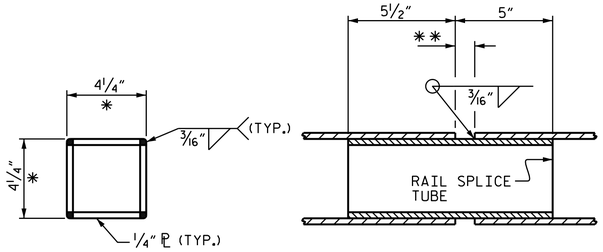

RAIL SPLICE DETAILS

* - DIMENSION AFTER GRINDING RADIUS ON CORNERS TO MATCH INSIDE OF METAL RAIL. GRIND ALL EDGES PRIOR TO GALVANIZING TO ASSURE FIT.

** -1" FOR SPLICE NOT AT EXPANSION JOINT

NOTES

METAL RAIL SHALL BE GALVANIZED STEEL IN ACCORDANCE WITH THE REQUIREMENTS OF THE GENERAL NOTES AND THE FOLLOWING SPECIFICATIONS.

GALVANIZED STEEL RAILS

MATERIAL AND GALVANIZING ARE TO CONFORM TO THE FOLLOWING SPECIFICATIONS:

POST, POST BASES, ANCHOR PLATES AND RAIL SPLICE TUBES: AASHTO M270 GRADE 36 STRUCTURAL STEEL-GALVANIZED TO AASHTO M111.

THE CUT ENDS OF GALVANIZED STEEL RAILING, AFTER GRINDING SMOOTH SHALL BE GIVEN TWO COATS OF ZINC RICH PAINT MEETING THE REQUIREMENTS OF FEDERAL SPECIFICATION MIL-P-26915 USAF TYPE 1, OR OF FEDERAL SPECIFICATIONS TT-P-641.

RAILS: ASTM A500 GRADE B, A501 OR A618 - GALVANIZED TO AASHTO M111. ALUMINUM WILL NOT BE ALLOWED.

REDUCED BASE WELDED STUDS: ASTM A108-GALVANIZED TO AASHTO M111.

HIGH STRENGTH ANCHOR BOLTS SHALL CONFORM TO ASTM 1554 GRADE 105. HEAVY HEX NUTS SHALL CONFORM TO ASTM A563 DH, AND WASHERS TO ASTM F436, TYPE 1. NUTS AND WASHERS SHALL BE GALVANIZED TO AASHTO M111.

GENERAL NOTES

RAILING SHALL BE CONTINUOUS FROM END POST TO END POST OF BRIDGE. EACH JOINT IN RAIL LENGTH SHALL BE SPLICED AS DETAILED. PANEL LENGTHS OF RAIL SHALL BE ATTACHED TO A MINIMUM OF THREE POSTS.

FOR END OF RAIL TO CLEAR FACE OF CONCRETE END POST DIMENSION, SEE SHEET S-10.

CERTIFIED MILL REPORTS ARE REQUIRED FOR RAILS AND POSTS. SHOP INSPECTION IS NOT REQUIRED.

METAL RAIL POSTS SHALL BE SET NORMAL TO CURB GRADE.

METHOD OF MEASUREMENT FOR METAL RAILS: FOR LENGTH OF METAL RAILS TO BE PAID FOR, SEE THE STANDARD SPECIFICATIONS.

CURVED RAIL USAGE: WHERE RAILS ARE TO BE USED ON BRIDGES ON HORIZONTAL AND/OR VERTICAL CURVATURE THE CONTRACTOR MAY, AT HIS OPTION, HAVE THE REQUIRED CURVATURE IN THE RAIL FORMED IN THE SHOP OR IN THE FIELD. IN EITHER EVENT, THE RAIL SHALL CONFORM WITHOUT BUCKLING OR KINKING TO THE REQUIRED CURVATURE IN A UNIFORM MANNER ACCEPTABLE TO THE ENGINEER.

TO INSURE FUTURE IDENTIFICATION OF THE FABRICATOR, A PERMANENT IDENTIFYING MARK SHALL BE PLACED ON EACH POST. THE METHOD OF MARKING AND LOCATION SHALL BE SUCH THAT IT DOES NOT DETRACT FROM THE APPEARANCE OF THE POST, BUT REMAINS VISIBLE AFTER RAIL PLACEMENT.

SHIMS SHALL BE USED AS NECESSARY FOR POST ALIGNMENT.

MINOR VARIATIONS IN DETAILS OF METAL RAIL WILL BE CONSIDERED. DETAILS OF SUCH VARIATIONS, IF DESIRED, SHALL BE SUBMITTED FOR APPROVAL.

GROOVED CONTRACTION JOINTS, ½" IN DEPTH, SHALL BE TOOLED IN ALL EXPOSED FACES OF THE CURB AND IN ACCORDANCE WITH ARTICLE 825-10(B) OF THE STANDARD SPECIFICATIONS. A CONTRACTION JOINT SHALL BE LOCATED AT EACH THIRD POINT BETWEEN CURB EXPANSION JOINTS. ONLY ONE CONTRACTION JOINT IS REQUIRED AT MIDPOINT OF CURB SEGMENTS LESS THAN 20 FEET IN LENGTH AND NO CONTRACTION JOINTS ARE REQUIRED FOR THOSE SEGMENTS LESS THAN 10 FEET IN LENGTH.

THE RAIL SECTIONS SHALL BE ATTACHED TO THE POSTS BY TWO THREADED ¾" Ø WELDED STUDS, PLATE WASHERS, LOCKWASHERS, AND NUTS.

PAY LENGTH 125.0 LIN. FT.

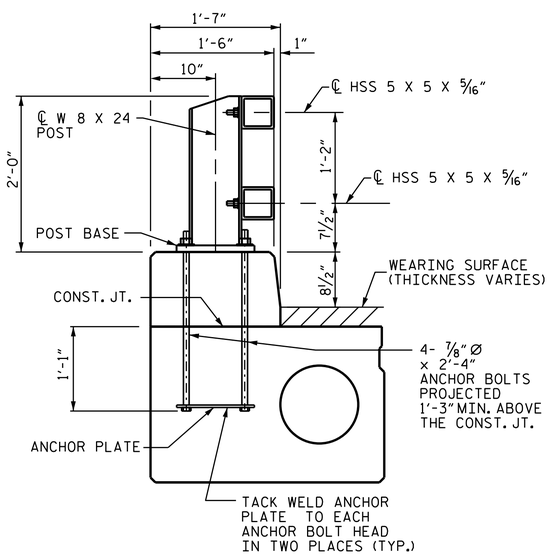

SECTION THRU RAIL

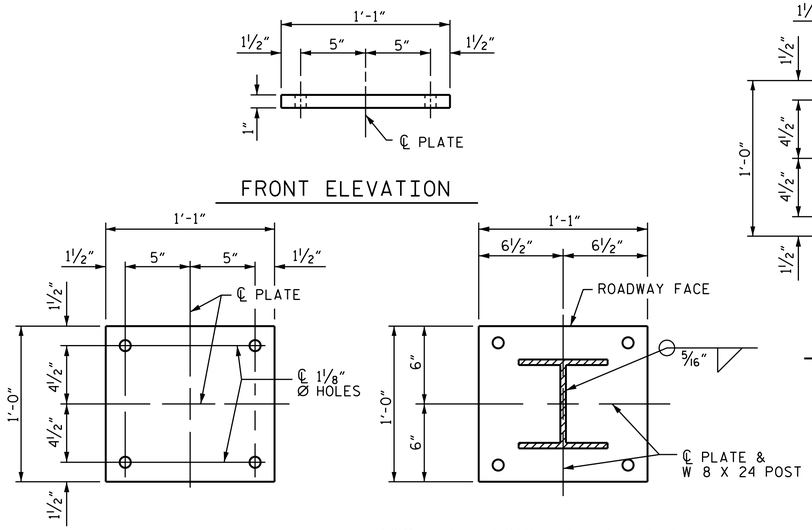

POST BASE DETAILS

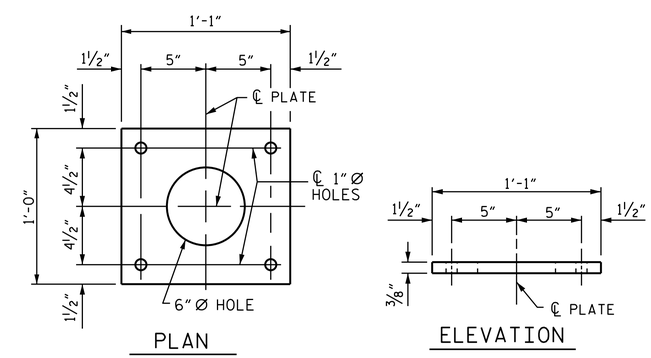

ANCHOR PLATE DETAILS

PROJECT NO. B-4953

ALAMANCE COUNTY

STATION: 16+02.00 -L-

SHEET 1 OF 2

STATE OF NORTH CAROLINA
DEPARTMENT OF TRANSPORTATION
RALEIGH

ALASKA
2 TUBE METAL RAIL

NORTH CAROLINA PROFESSIONAL SEAL 14855 ENGINEER DOUGLAS R. CALHOUN

DocuSigned by: Douglas R. Calhoun
12EFE12F0202440...
11/21/2014

ASSEMBLED BY : T. L. AVERETTE	DATE : 09-04-14
CHECKED BY : D. R. CALHOUN	DATE : 09-12-14
DRAWN BY : RWW 7/14	
CHECKED BY : TMG 7/14	

REVISIONS						SHEET NO.
NO.	BY:	DATE:	NO.	BY:	DATE:	S-9
1			3			TOTAL SHEETS
2			4			16

19-NOV-2014 14:26
R:\Structures\Plans\b4953_sd_cs.dgn
asorsenginh