PROJECT REFERENCE NO.	SHEET NO.
B-4953	2A

ROADWAY DESIGN ENGINEER
NORTH CAROLINA PROFESSIONAL SEAL 033871 ENGINEER
10/20/2014
DocuSigned by: Daniel W. Gardner, Jr.
2F399F1E43CB4B0...

PAVEMENT DESIGN ENGINEER
NORTH CAROLINA PROFESSIONAL SEAL 22896 ENGINEER
CLARK S. MORRISON
DocuSigned by: Clark S Morrison
06923816E4F400...

PAVEMENT SCHEDULE

C1	PROP. APPROX. 2½″ ASPHALT CONCRETE SURFACE COURSE, TYPE SF9.5A, AT AN AVERAGE RATE OF 137.5 LBS. PER SQ. YD. IN EACH OF TWO LAYERS.
C2	PROP. VAR. DEPTH ASPHALT CONCRETE SURFACE COURSE, TYPE SF9.5A, AT AN AVERAGE RATE OF 110 LBS. PER SQ. YD. PER 1″ DEPTH. TO BE PLACED IN LAYERS NOT TO EXCEED 1½″ IN DEPTH.
E1	PROP. APPROX. 4″ ASPHALT CONCRETE BASE COURSE, TYPE B25.0B, AT AN AVERAGE RATE OF 456 LBS. PER SQ. YD.
E2	PROP. VAR. DEPTH ASPHALT CONCRETE BASE COURSE, TYPE B25.0B, AT AN AVERAGE RATE OF 114 LBS. PER SQ. YD. PER 1″ DEPTH. TO BE PLACED IN LAYERS NOT LESS THAN 3″ IN DEPTH OR GREATER THAN 5½″ IN DEPTH.
J	PROP. 6″ AGGREGATE BASE COURSE.
T	EARTH MATERIAL.
W	VARIABLE DEPTH ASPHALT PAVEMENT (SEE STANDARD WEDGING DETAIL).

NOTE: PAVEMENT EDGE SLOPES ARE 1:1 UNLESS SHOWN OTHERWISE.

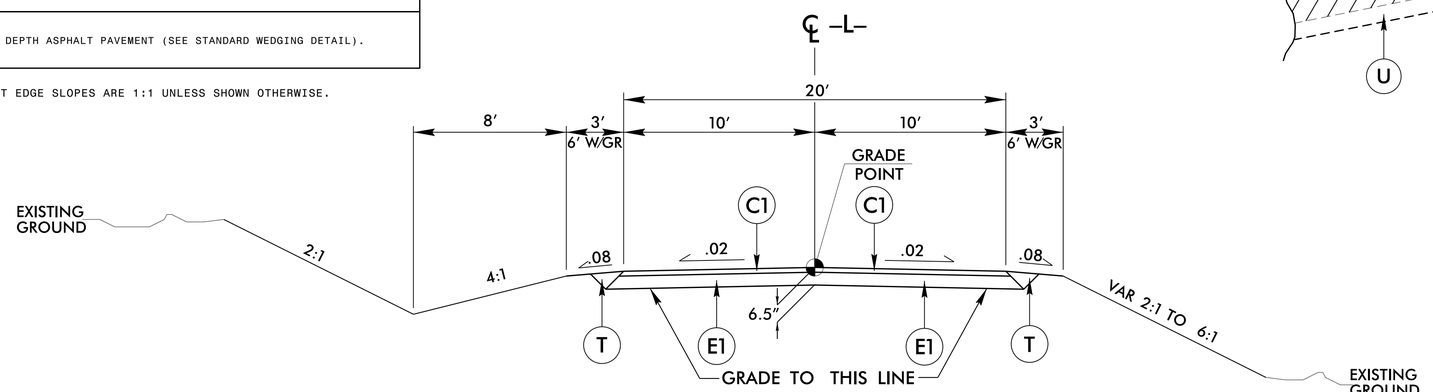

TYPICAL SECTION NO. 1

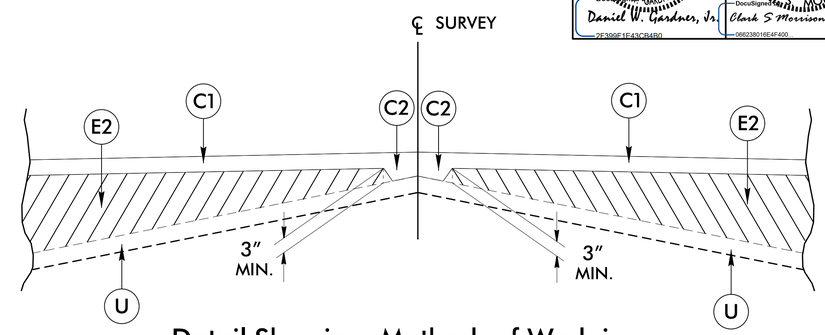

Detail Showing Method of Wedging

NOTE: TRANSITION FROM EXISTING TO TYPICAL SECTION NO. 1
–L– STA. 14+00.00 TO STA. 14+50.00

USE TYPICAL SECTION NO. 1

–L– STA. 14+50.00 TO STA. 15+65.88 (BEGIN BRIDGE)
–L– STA. 16+38.13 (END BRIDGE) TO STA. 17+00.00

NOTE: TRANSITION FROM TYPICAL SECTION NO. 1 TO EXISTING
–L– STA. 17+00.00 TO STA. 17+50.00

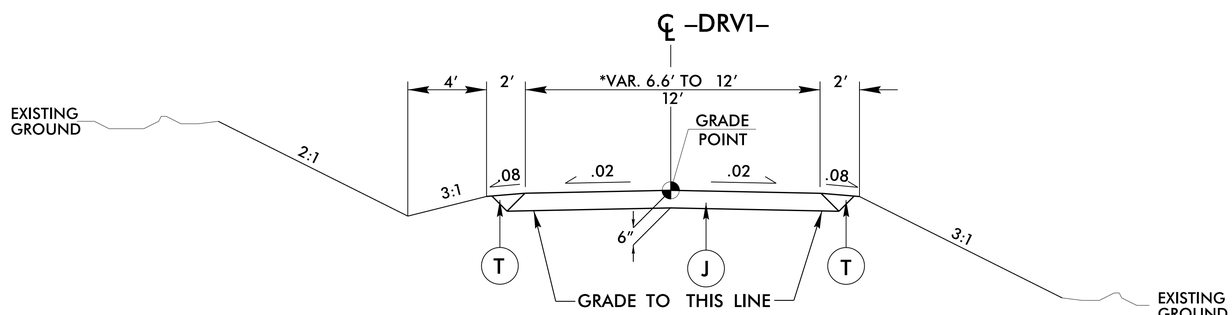

TYPICAL SECTION NO. 2

USE TYPICAL SECTION NO. 2

*–DRV1– STA. 10+00.00 TO STA. 10+20.00
–DRV1– STA. 10+20.00 TO STA. 10+50.00
–DRV2– STA. 10+00.00 TO STA. 10+49.74
–DRV2A– STA. 10+00.00 TO STA. 10+37.21

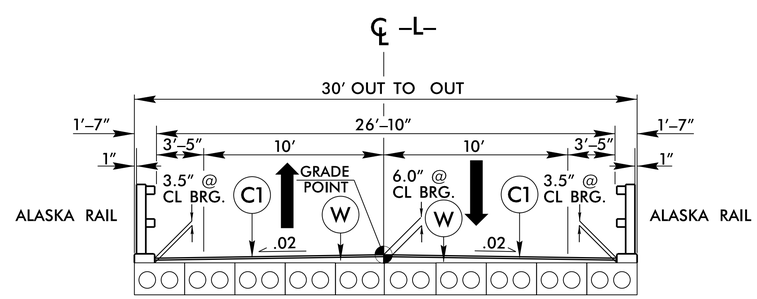

DETAIL FOR WEARING SURFACE ON CORED SLAB BRIDGE

TYPICAL SECTION NO. 3

USE TYPICAL SECTION NO. 3

–L– STA. 15+65.88 (BEGIN BRIDGE) TO STA. 16+38.13 (END BRIDGE)

6/2/99

09-OCT-2014 08:36
R:\Roadway\Proj\b4953_rdy_typ.dgn
$$USERNAME$$