PROJ. REFERENCE NO.	SHEET NO.
B-4741	TMP-6

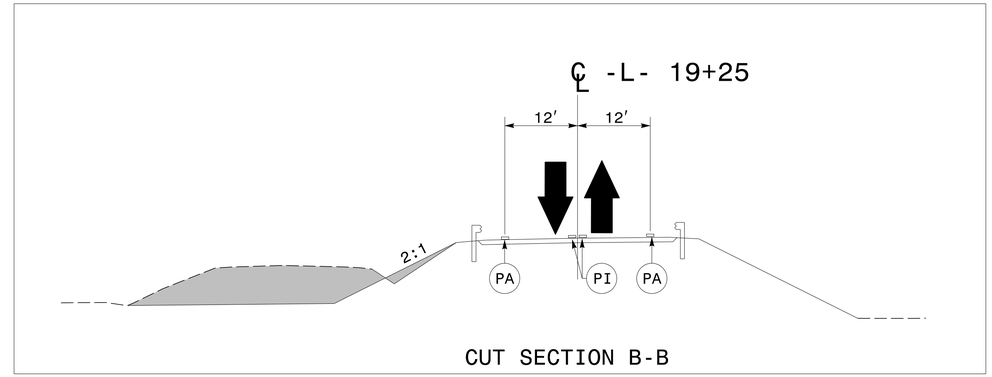

CUT SECTION B-B

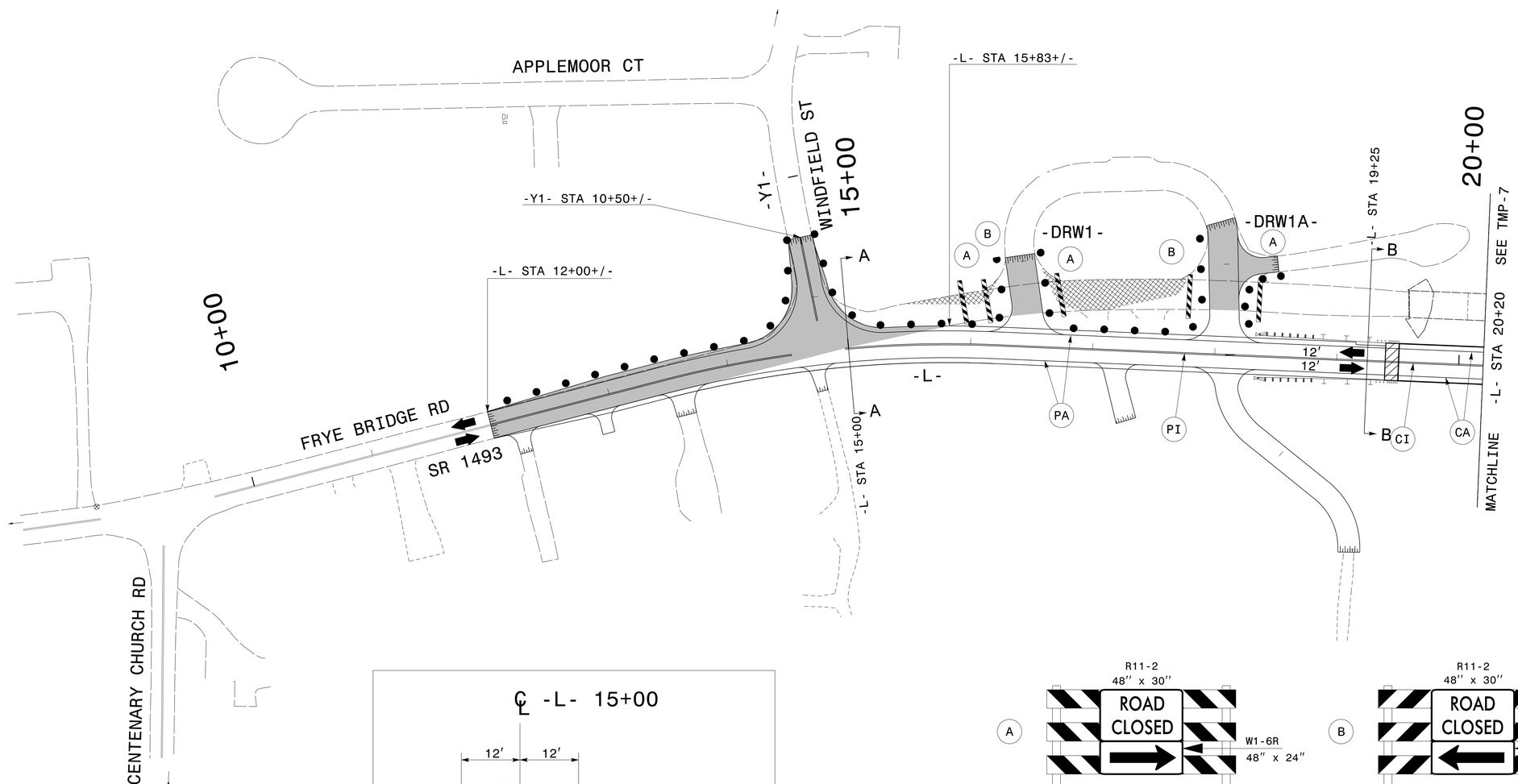

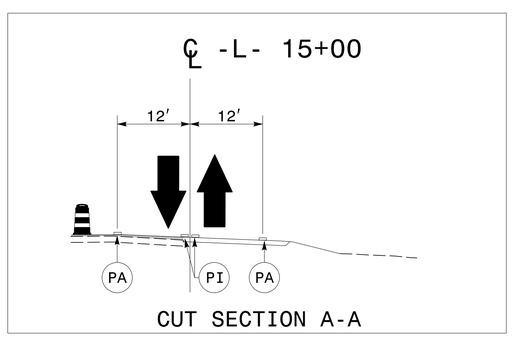

CUT SECTION A-A

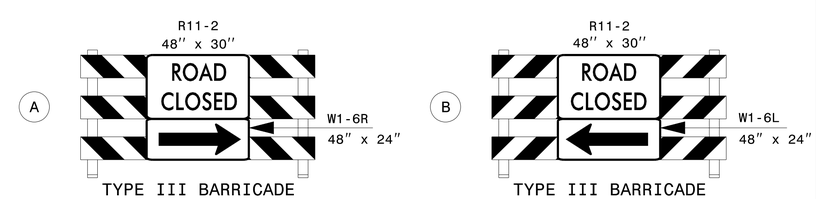

TYPE III BARRICADE

TYPE III BARRICADE

APPROVED: DocuSigned by: David Bissette 0A4C6CFCAD6E4C7... DATE: 8/26/2014

SEAL

NORTH CAROLINA PROFESSIONAL SEAL 30864 ENGINEER DAVID W. BISSETTE

DIVISION OF HIGHWAYS STATE OF NORTH CAROLINA DEPARTMENT OF TRANSPORTATION WORK ZONE TRAFFIC CONTROL

PHASE II

8/25/2014
R:\TIPProjects-B\B4741\Traffic\TrafficControl\TCP\B4741_TC_TMP06.dgn
User:derichardson