PROJECT REFERENCE NO.	SHEET NO.
B-4741	2A-1

ROADWAY DESIGN ENGINEER
NORTH CAROLINA PROFESSIONAL SEAL 033298 ENGINEER JEFFREY L. TEAGUE
DocuSigned by: 9/16/2014
Jeffrey L. Teague
70BBE05F6B00474...

PAVEMENT DESIGN ENGINEER
NORTH CAROLINA PROFESSIONAL SEAL 039819 ENGINEER LAJONYA T. HEYWARD
DocuSigned by: 9/15/2014
LaJonya Heyward
C2F5F705B2C4413...

PAVEMENT SCHEDULE

FINAL PAVEMENT DESIGN

C1	PROP. APPROX. 2½" ASPHALT CONCRETE SURFACE COURSE, TYPE SF9.5A, AT AN AVERAGE RATE OF 137.5 LBS. PER SQ. YD. IN EACH OF TWO LAYERS.
C2	PROP. VAR. DEPTH ASPHALT CONCRETE SURFACE COURSE, TYPE SF9.5A, AT AN AVERAGE RATE OF 110 LBS. PER SQ. YD. PER 1" DEPTH TO BE PLACED IN LAYERS NOT TO EXCEED 1½" IN DEPTH.
D1	PROP. APPROX. 2½" ASPHALT CONCRETE INTERMEDIATE COURSE, TYPE I19.0B, AT AN AVERAGE RATE OF 285 LBS. PER SQ. YD.
D2	PROP. VAR. DEPTH ASPHALT CONCRETE INTERMEDIATE COURSE, TYPE I19.0B, AT AN AVERAGE RATE OF 114 LBS. PER SQ. YD. PER 1" DEPTH TO BE PLACED IN LAYERS NOT LESS THAN 2½" IN DEPTH OR GREATER THAN 4" IN DEPTH.
E1	PROP. APPROX. 4" ASPHALT CONCRETE BASE COURSE, TYPE B25.0B, AT AN AVERAGE RATE OF 456 LBS. PER SQ. YD.
E2	PROP. VAR. DEPTH ASPHALT CONCRETE BASE COURSE, TYPE B25.0B, AT AN AVERAGE RATE OF 114 LBS. PER SQ. YD. PER 1" DEPTH TO BE PLACED IN LAYERS NOT LESS THAN 3" IN DEPTH OR GREATER THAN 5½" IN DEPTH.
J1	PROP. 6" AGGREGATE BASE COURSE.
R1	SHOULDER BERM GUTTER.
T	EARTH MATERIAL.
U	EXISTING PAVEMENT.
W	VARIABLE DEPTH ASPHALT PAVEMENT (SEE DETAILS SHOWING METHOD OF WEDGING.)

NOTE: PAVEMENT EDGE SLOPES ARE 1:1 UNLESS SHOWN OTHERWISE.

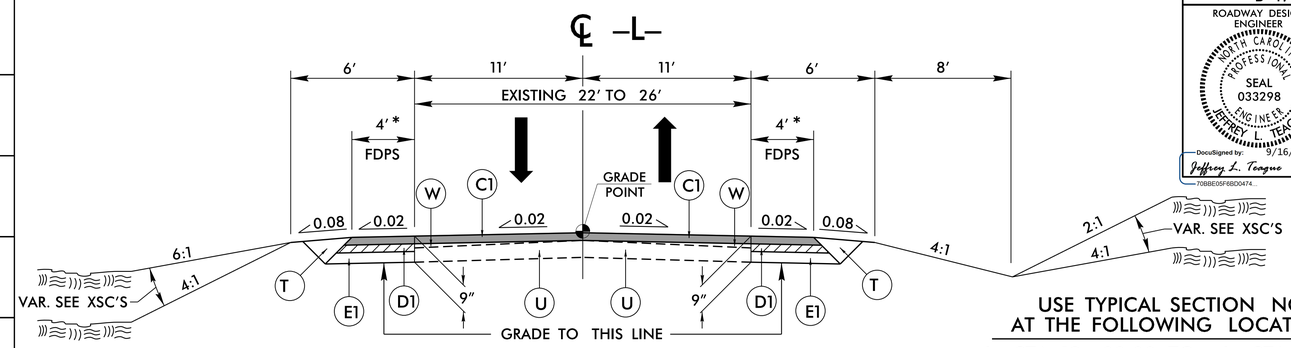

TYPICAL SECTION NO. 1

USE TYPICAL SECTION NO. 1
AT THE FOLLOWING LOCATIONS:

–L– STA. 12+00.00 TO –L– STA. 15+50.00
–L– STA. 25+50.00 TO –L– STA. 28+00.00

*NOTE: PROVIDED FOR BIKE ROUTE ACCOMMODATION.

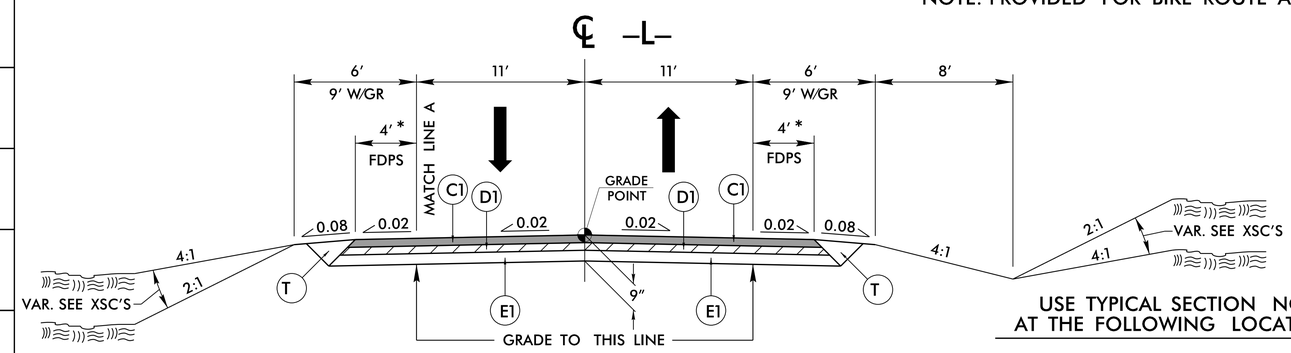

TYPICAL SECTION NO. 2

USE TYPICAL SECTION NO. 2
AT THE FOLLOWING LOCATIONS:

–L– STA. 15+50.00 TO –L– STA. 19+50.69 (BEGIN BRIDGE)
–L– STA. 22+33.31 (END BRIDGE) TO –L– STA. 25+50.00

*NOTE: PROVIDED FOR BIKE ROUTE ACCOMMODATION.

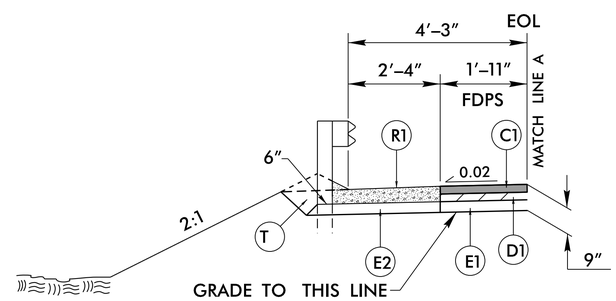

DETAIL SHOWING SHOULDER BERM GUTTER (SBG)
ON TOP OF BASE COURSE

USE SHOULDER BERM GUTTER AT THE FOLLOWING LOCATION:
–L– STA. 19+15.25 TO –L– STA. 19+39.69 (BEGIN APPROACH SLAB) LT

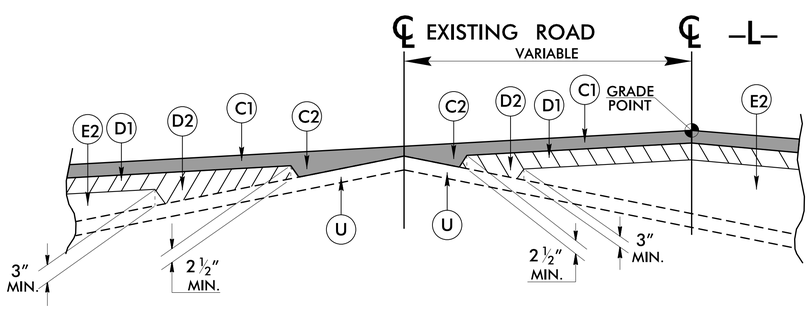

DETAIL SHOWING METHOD OF WEDGING
USE IN CONJUNCTION WITH TYPICAL SECTION NO. 1

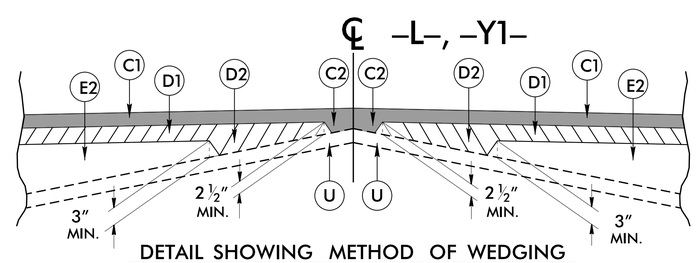

DETAIL SHOWING METHOD OF WEDGING
USE IN CONJUNCTION WITH TYPICAL SECTION NO. 1 AND NO. 4

NOTE: INCIDENTAL MILLING AS DIRECTED BY THE ENGINEER TO TIE PROPOSED FINAL SURFACE TO EXISTING PAVEMENT.

6/2/99

09-SEP-2014 10:34
R:\Roadway\Proj\b4741_rdy_typ.dgn
$$$$USERNAME$$$$