PROJECT REFERENCE NO.	SHEET NO.
B-4741	2A-2
ROADWAY DESIGN ENGINEER	PAVEMENT DESIGN ENGINEER
NORTH CAROLINA PROFESSIONAL SEAL 033298 ENGINEER JEFFREY L. TEAGUE	NORTH CAROLINA PROFESSIONAL SEAL 039819 ENGINEER LAJONYA T. HEYWARD
DocuSigned by: 9/16/2014 Jeffrey L. Teague 70BBE05F6BD0474...	DocuSigned by: 9/15/2014 LaJonya Heyward C2F5F705B2C4413...

PAVEMENT SCHEDULE

FINAL PAVEMENT DESIGN

C1	2½" SF9.5A
C2	VAR. SURFACE COURSE SF9.5A
D1	2½" I19.0B
E1	4" B25.0B
J1	6" ABC
T	EARTH MATERIAL
U	EXISTING PAVEMENT
W	WEDGING

NOTE: PAVEMENT EDGE SLOPES ARE 1:1 UNLESS SHOWN OTHERWISE.

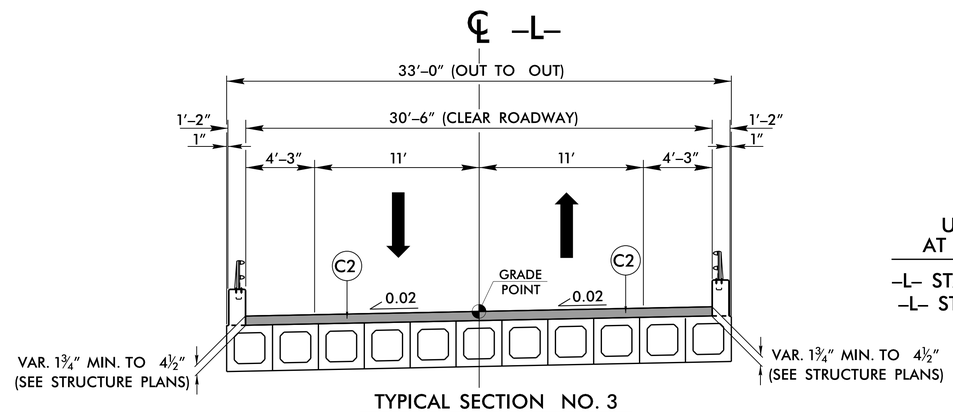

TYPICAL SECTION NO. 3
BOX BEAM BRIDGE (SEE STRUCTURE PLANS)

USE TYPICAL SECTION NO. 3
AT THE FOLLOWING LOCATION:

–L– STA. 19 + 50.69 (BEGIN BRIDGE) TO
–L– STA. 22 + 33.31 (END BRIDGE)

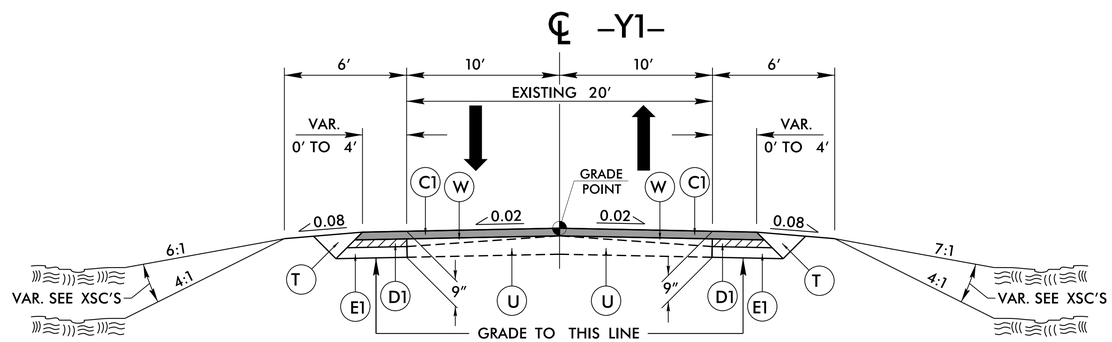

TYPICAL SECTION NO. 4

NOTE: INCIDENTAL MILLING AS DIRECTED BY THE ENGINEER TO TIE PROPOSED FINAL SURFACE TO EXISTING PAVEMENT.

USE TYPICAL SECTION NO. 4
AT THE FOLLOWING LOCATION:

–Y1– STA. 10 + 50.00 TO –Y1– STA. 11 + 33.79

℄ –DRW1–, –DRW1A–, –DRW2–, –DRW3–, –DRW4–, –DRW5–

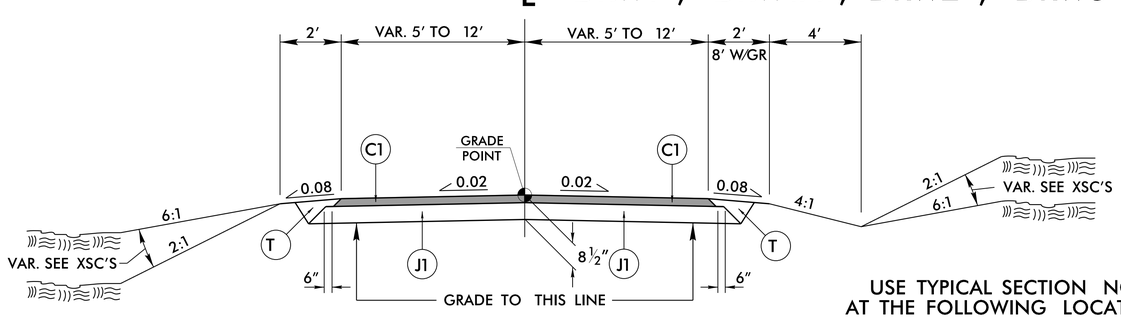

TYPICAL SECTION NO. 5

USE TYPICAL SECTION NO. 5
AT THE FOLLOWING LOCATIONS:

–DRW1– STA. 10 + 95.00 TO –DRW1– STA. 11 + 55.25
–DRW1A– STA. 10 + 65.00 TO –DRW1A– STA. 11 + 59.28
–DRW2– STA. 10 + 15.03 TO –DRW2– STA. 12 + 02.02
–DRW3– STA. 10 + 00.00 TO –DRW3– STA. 11 + 15.14
–DRW4– STA. 10 + 15.00 TO –DRW4– STA. 12 + 34.21
–DRW5– STA. 10 + 15.02 TO –DRW5– STA. 11 + 15.00

℄ DRIVEWAY

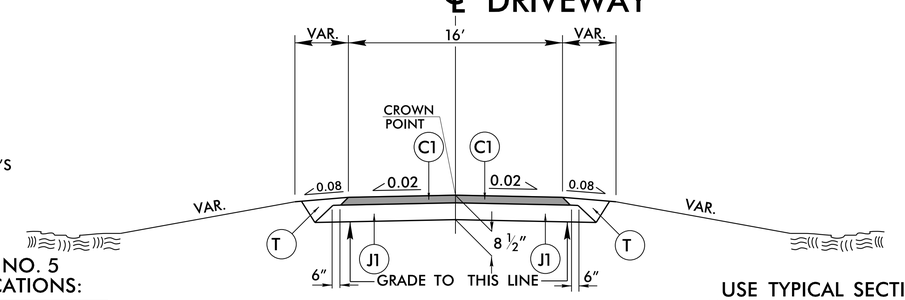

TYPICAL SECTION NO. 6

USE TYPICAL SECTION NO. 6
AT THE FOLLOWING LOCATION:

–L– STA. 17 + 26.13 RT. (DRIVEWAY TO RENE MARTINEZ'S PROPERTY, PARCEL 6)

NO HORIZONTAL OR VERTICAL ALIGNMENT PROVIDED FOR DRIVEWAY (SEE X–SECTIONS).

6/2/99

09-SEP-2014 10:35
R:\Roadway\Proj\b4741_rdy_typ.dgn
$$USERNAME$$