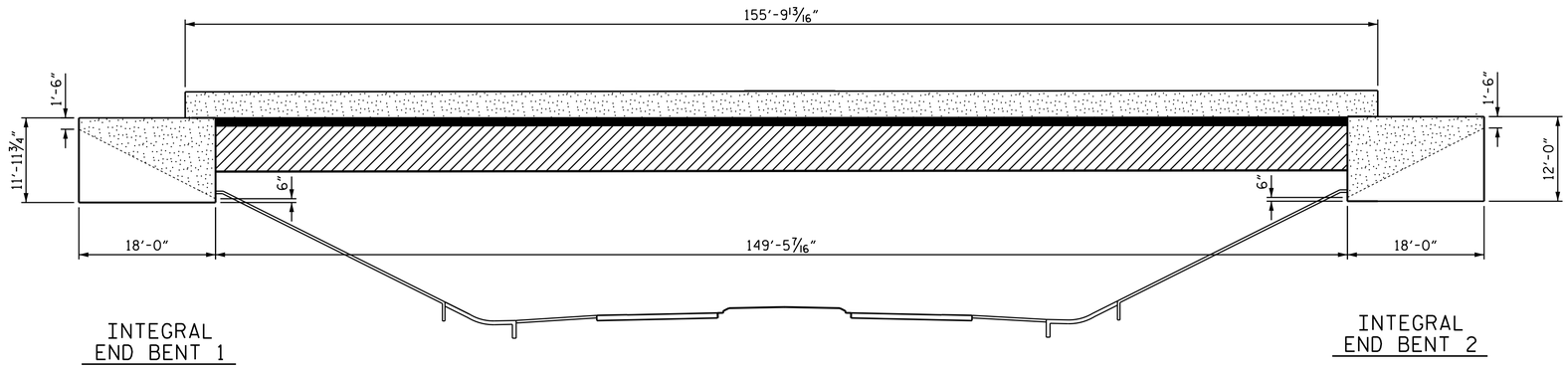

ELEVATION VIEW

(LOOKING DOWN-STATION -L-)

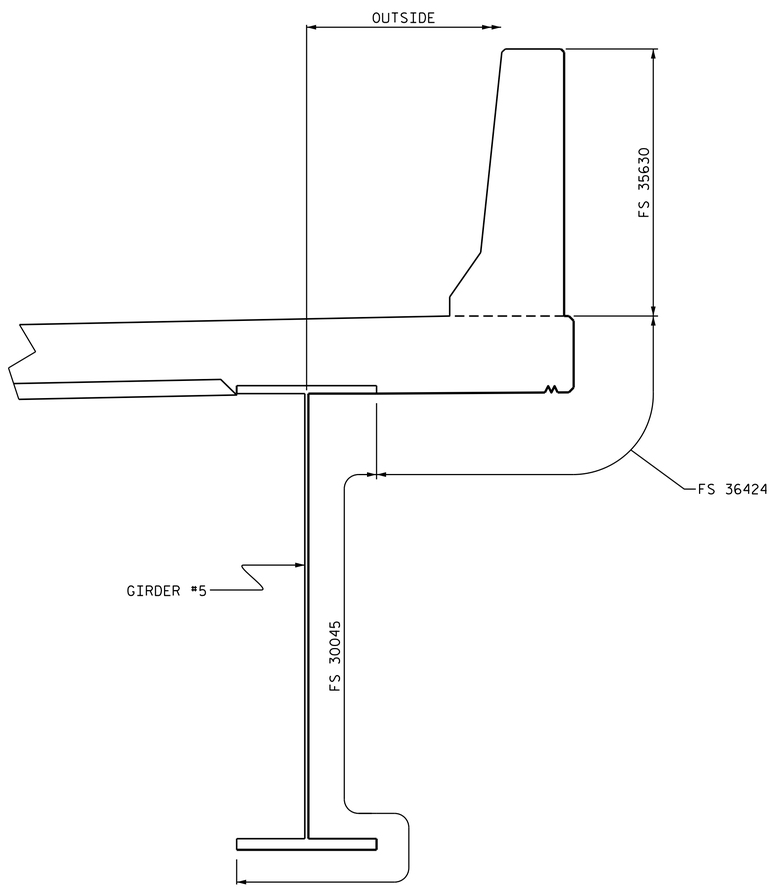

PART SECTION GIRDER #5

NOTES

FOR AESTHETIC BRIDGE TREATMENTS, SEE SPECIAL PROVISIONS.

APPLY CONCRETE STAINING TO THE FOLLOWING:
- OUTSIDE OF END BENT WING WALLS
- BACK OF BARRIER RAIL
- EDGE OF DECK
- BOTTOM OF OVERHANG

PAINT EXTERIOR GIRDER #5 ELEMENTS AS FOLLOWS:
- OUTSIDE BOTTOM OF TOP FLANGE
- OUTSIDE OF WEB
- OUTSIDE TOP OF BOTTOM FLANGE
- OUTSIDE EDGE OF BOTTOM FLANGE
- BOTTOM OF BOTTOM FLANGE
- OUTSIDE EXPOSED COMPONENTS OF BOLTED FIELD SPLICE

HOLD-DOWN PLATES FOR GUARDRAIL ATTACHMENTS SHALL BE PAINTED TO MATCH COLOR OF BARRIER RAIL.

FEDERAL STD. COLOR

- FS 35630
- FS 36424
- FS 30045

QUANTITIES	
CONCRETE STAINING	1,338 SQ. FT.
PAINTING OF STRUCTURAL STEEL	1,437 SQ. FT.

PROJECT NO. R-4903

BLADEN COUNTY

STATION: 46+73.19 -L-

STATE OF NORTH CAROLINA
DEPARTMENT OF TRANSPORTATION
RALEIGH

AESTHETIC TREATMENT PLAN

(RIGHT LANE)

NORTH CAROLINA PROFESSIONAL SEAL 10730 ENGINEER D. ANDRE' DAVENPORT, JR.

DocuSigned by: D. André Davenport, Jr. 895DC284F664492... 10/28/2014

REVISIONS						SHEET NO.
NO.	BY:	DATE:	NO.	BY:	DATE:	S-92
1			3			TOTAL SHEETS
2			4			92

STR. #3

DRAWN BY : D.A. DAVENPORT DATE : 10/01/14
CHECKED BY : L.E. SUTTON DATE : 10/02/14

28-OCT-2014 09:06
R:\Structures\Plans\Str#3\R4903_sd_AT_03.dgn
dadavenport