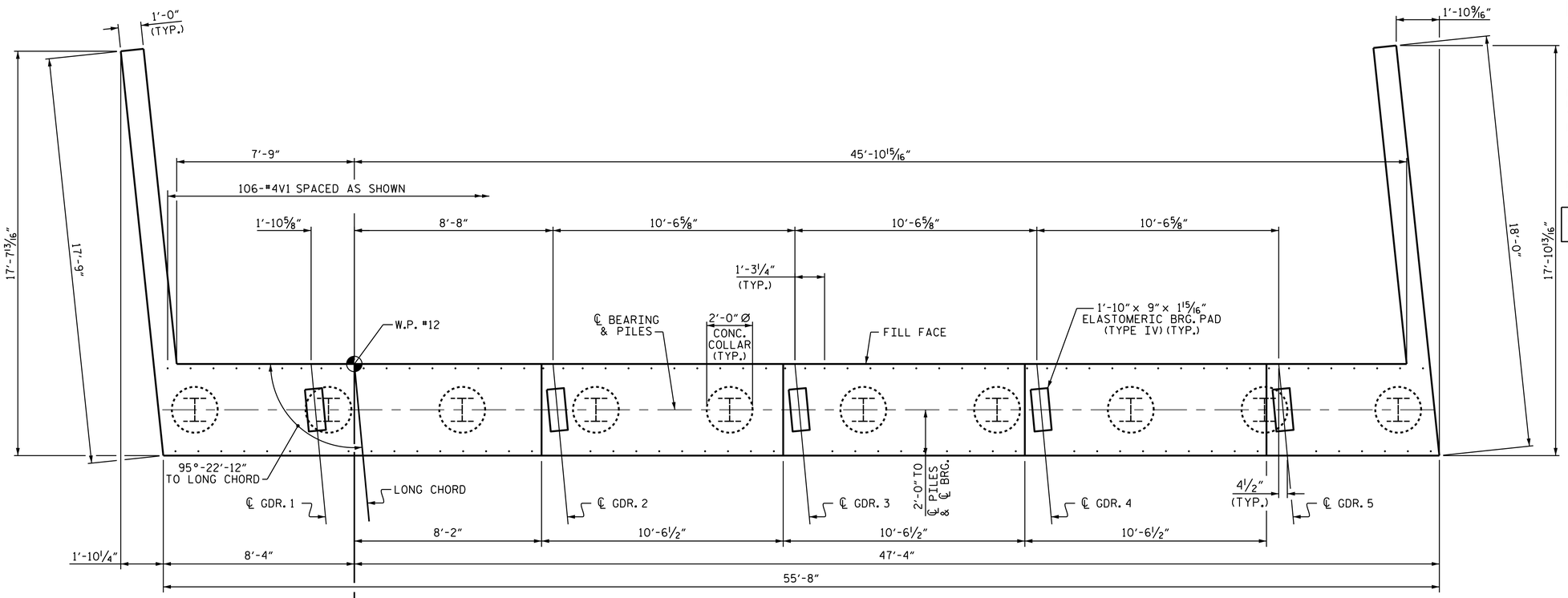

PLAN

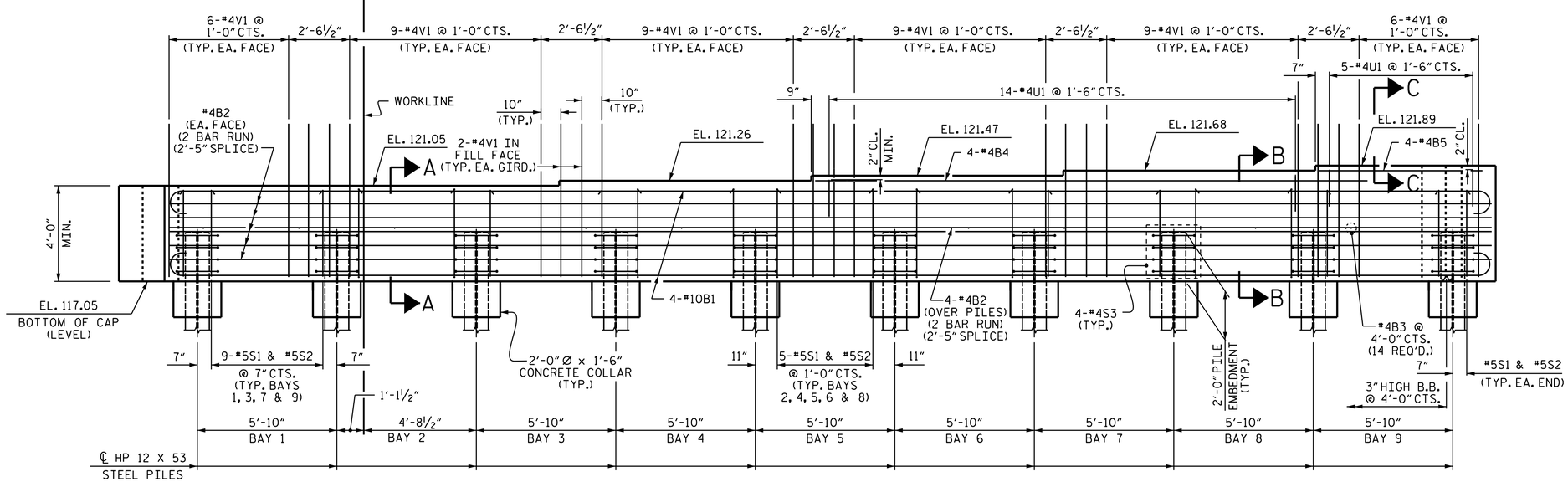

ELEVATION

NOTES

THE TOP SURFACE OF THE END BENT CAP AND WINGS, EXCEPT THE BEARING AREA, SHALL BE RAKED TO A DEPTH OF 1/4".

THE UPPER PORTION OF THE WINGS SHALL BE POURED WITH THE SUPERSTRUCTURE. CONCRETE AND REINFORCING STEEL QUANTITIES ARE INCLUDED IN THE SUPERSTRUCTURE BILL OF MATERIAL. FOR DETAILS, SEE SUPERSTRUCTURE PLANS.

INSTALL THE 4" DIA. DRAIN PIPE THROUGH THE WING WALL AS REQUIRED FOR REINFORCED BRIDGE APPROACH FILLS, SEE THE ROADWAY PLANS. REINFORCING STEEL IN THE WING WALL MAY BE SHIFTED AS NECESSARY TO CLEAR THE DRAIN PIPE.

FOR CONCRETE STAINING DETAILS FOR RIGHT WING, SEE "AESTHETIC TREATMENT PLAN" SHEET.

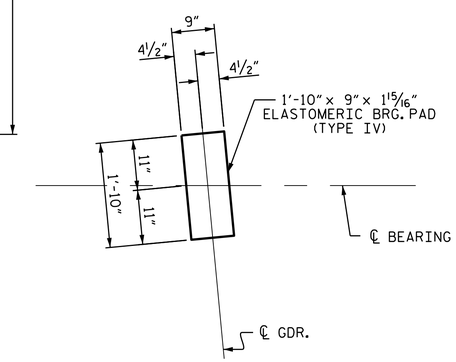

BEARING DETAIL

(TYP. EA. GIRDER)

PROJECT NO. R-4903

BLADEN COUNTY

STATION: 46+73.19 -L-

SHEET 1 OF 3

STATE OF NORTH CAROLINA
DEPARTMENT OF TRANSPORTATION
RALEIGH

SUBSTRUCTURE

INTEGRAL END BENT 2

(RIGHT LANE)

NORTH CAROLINA PROFESSIONAL SEAL 10730 ENGINEER D. ANDRÉ DAVENPORT

DocuSigned by: D. André Davenport, Jr. 895DC284F664495... 10/28/2014

REVISIONS						SHEET NO.
NO.	BY:	DATE:	NO.	BY:	DATE:	S-86
1			3			TOTAL SHEETS
2			4			92

STR. #3

DRAWN BY : K.D. LAYNE DATE : 12-11-12
CHECKED BY : R. P. PATEL DATE : 12-18-12
DESIGN ENGINEER OF RECORD: B. N. GRADY DATE : 04/12/13

28-OCT-2014 09:05
R:\Structures\Plans\Str#3\R4903_sd_E2_03.dgn
ddavenport