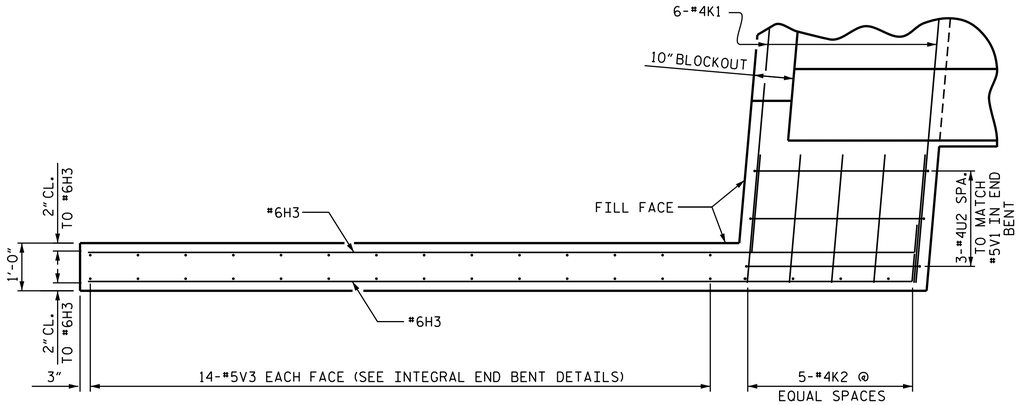

PLAN OF LEFT WING

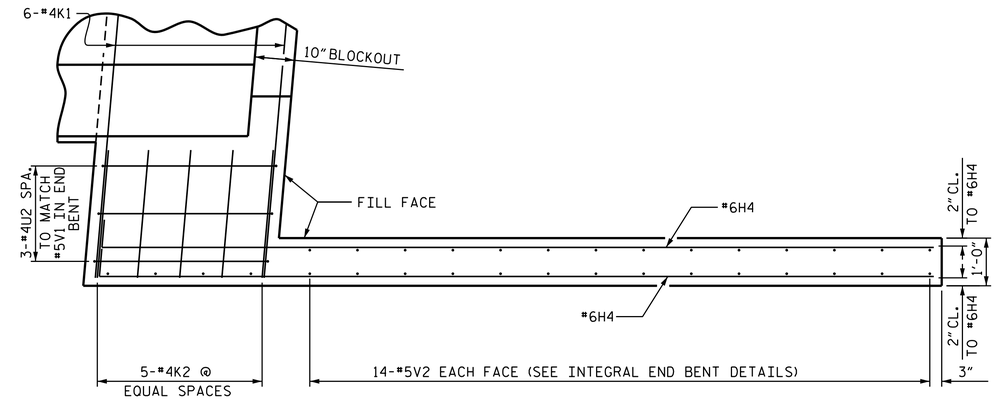

PLAN OF RIGHT WING

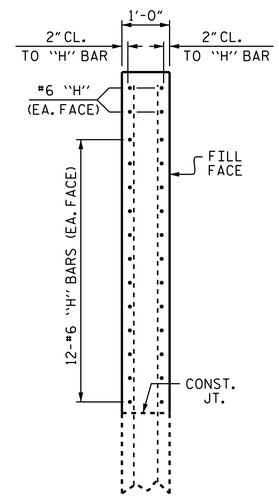

SECTION X-X

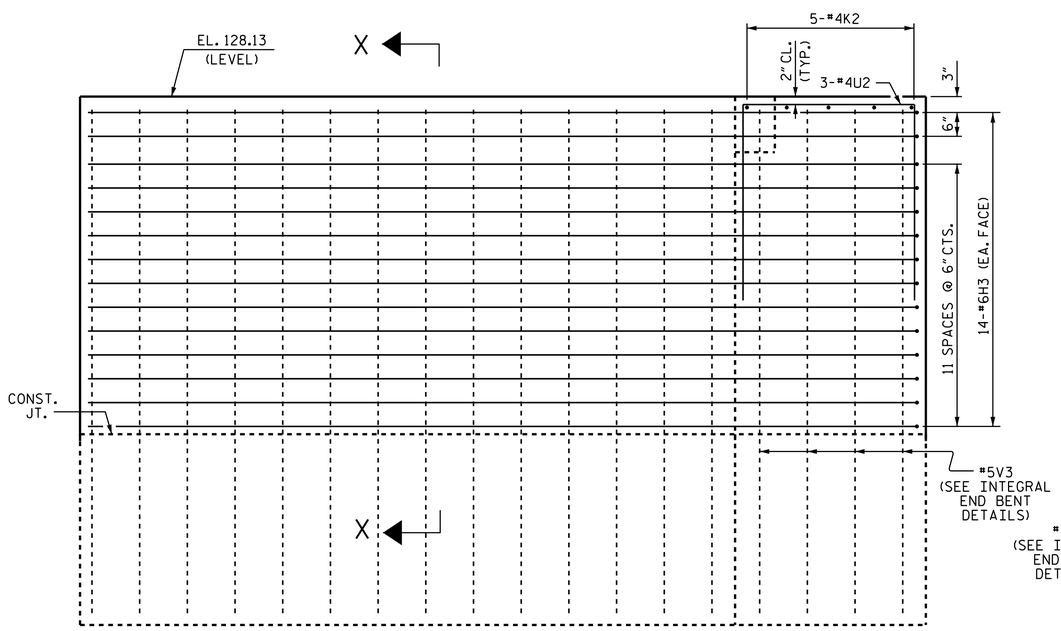

ELEVATION OF LEFT WING

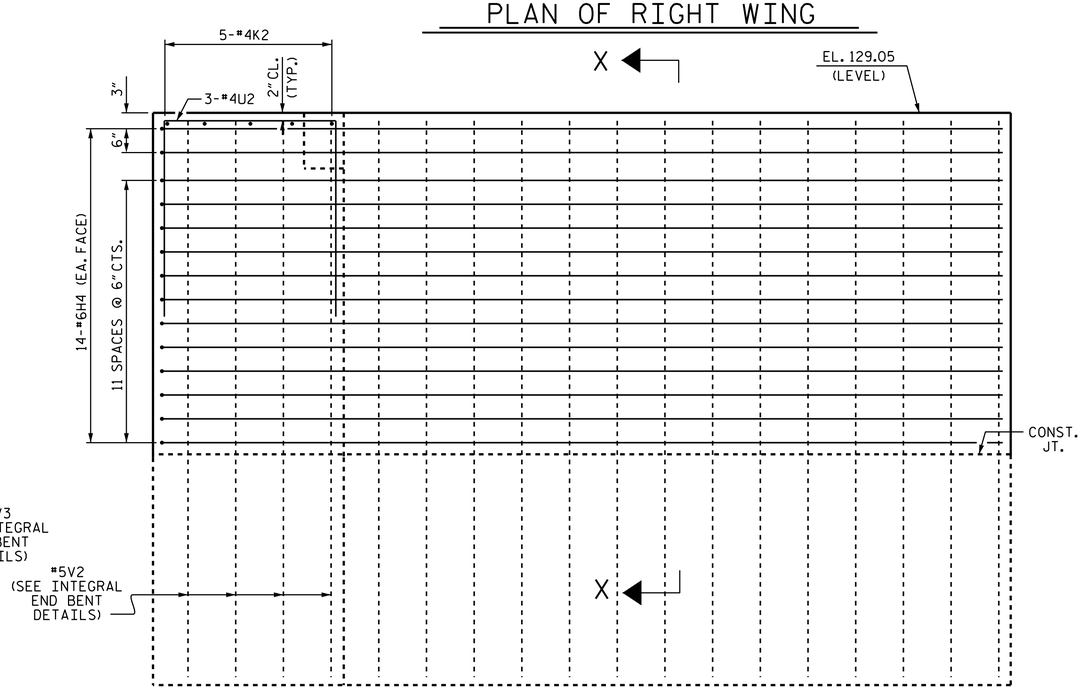

ELEVATION OF RIGHT WING

FOR CONCRETE STAINING, SEE AESTHETIC BRIDGE TREATMENT PLAN SPECIAL PROVISIONS.

END BENT 2

FOR CONCRETE STAINING DETAILS FOR RIGHT WING, SEE "AESTHETIC TREATMENT PLAN" SHEET.

PROJECT NO. R-4903

BLADEN COUNTY

STATION: 46+73.19 -L-

SHEET 3 OF 3

STATE OF NORTH CAROLINA
DEPARTMENT OF TRANSPORTATION
RALEIGH

SUPERSTRUCTURE

PLAN OF SPAN DETAILS

(RIGHT LANE)

NORTH CAROLINA PROFESSIONAL SEAL 10730 ENGINEER D. ANDRE DAVENPORT, JR.

DocuSigned by: D. André Davenport, Jr. 895DC284F664495... 10/28/2014

REVISIONS						SHEET NO.
NO.	BY:	DATE:	NO.	BY:	DATE:	S-72
1			3			TOTAL SHEETS
2			4			92

STR. #3

DRAWN BY : K.D. LAYNE DATE : 8-22-12
CHECKED BY : M. K. BEARD DATE : 10-15-12
DESIGN ENGINEER OF RECORD: T. M. GARRISON DATE : 04/12/13

28-OCT-2014 09:05
R:\Structures\Plans\Str#3\R4903_sd_S1_03.dgn
dadavenport