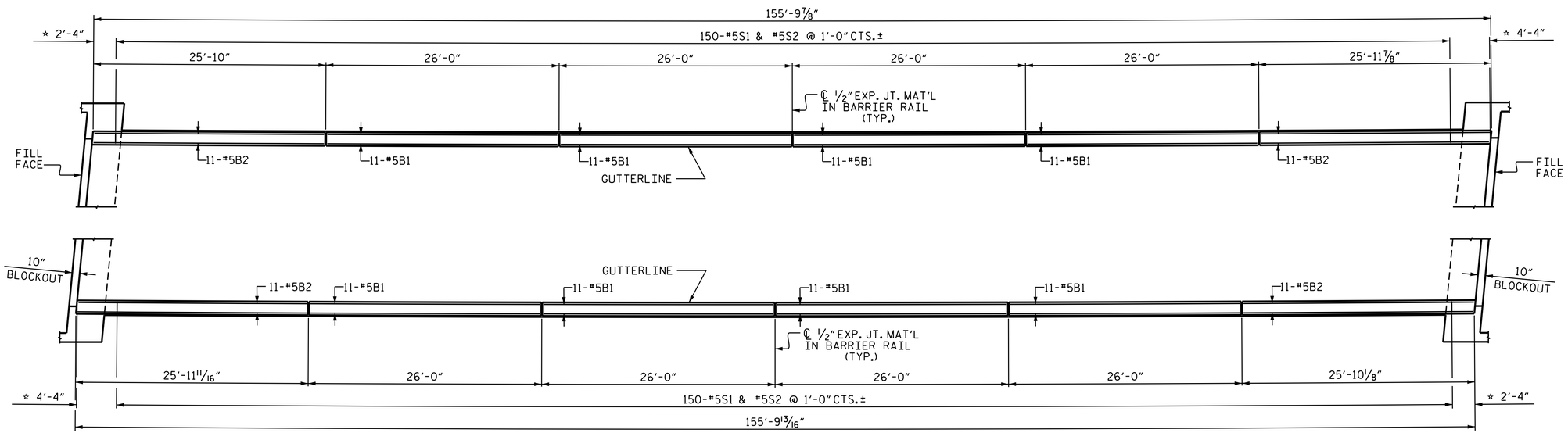

PLAN

* SEE END OF RAIL DETAILS

NOTES

THE BARRIER RAIL SHALL NOT BE CAST UNTIL ALL SLAB CONCRETE HAS BEEN CAST AND HAS REACHED A MINIMUM COMPRESSIVE STRENGTH OF 3,000 PSI.

ALL REINFORCING STEEL IN BARRIER RAILS SHALL BE EPOXY COATED.

GROOVED CONTRACTION JOINTS, 1/2" IN DEPTH, SHALL BE TOOLED IN ALL EXPOSED FACES OF THE BARRIER RAIL AND IN ACCORDANCE WITH ARTICLE 825-10(B) OF THE STANDARD SPECIFICATIONS. THE CONTRACTION JOINT SHALL BE LOCATED AT EACH THIRD POINT BETWEEN BARRIER RAIL EXPANSION JOINTS. ONLY ONE CONTRACTION JOINT IS REQUIRED AT MIDPOINT OF BARRIER RAIL SEGMENTS LESS THAN 20 FEET IN LENGTH AND NO CONTRACTION JOINTS ARE REQUIRED FOR THOSE SEGMENTS LESS THAN 10 FEET IN LENGTH.

#5S1 AND #5S2 BARS MAY BE SHIFTED SLIGHTLY TO AVOID 1/2" EXPANSION JOINT.

FOR CONCRETE STAINING DETAILS FOR RIGHT SIDE BARRIER RAIL, SEE "AESTHETIC TREATMENT PLAN" SHEET.

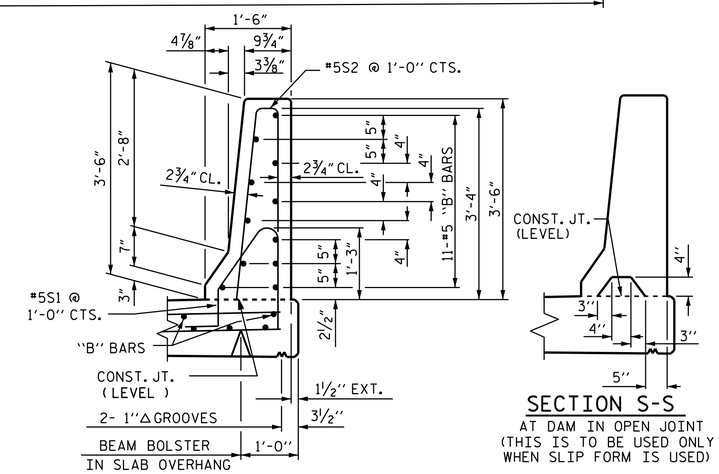

SECTION THRU RAIL

SECTION S-S

AT DAM IN OPEN JOINT (THIS IS TO BE USED ONLY WHEN SLIP FORM IS USED)

BAR TYPES

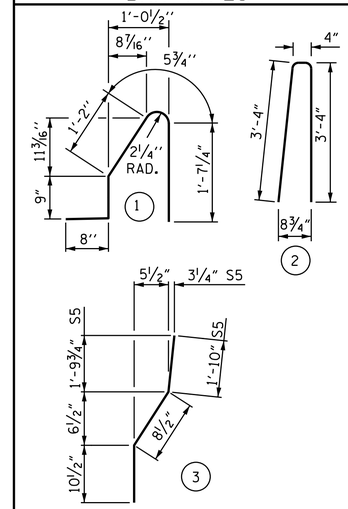

ALL BAR DIMENSIONS ARE OUT TO OUT

BILL OF MATERIAL

FOR CONCRETE BARRIER RAIL ONLY

BAR	NO.	SIZE	TYPE	LENGTH	WEIGHT
* B1	88	#5	STR	25'-7"	2348
* B2	44	#5	STR	25'-6"	1170
* S1	304	#5	1	4'-8"	1480
* S2	304	#5	2	7'-0"	2220
* S5	8	#5	3	3'-5"	29
* S6	8	#5	STR	3'-3"	27

* EPOXY COATED REINFORCING STEEL LBS. 7,274
CLASS AA CONCRETE CU. YDS. 42.4
CONCRETE BARRIER RAIL LIN. FT. 311.64

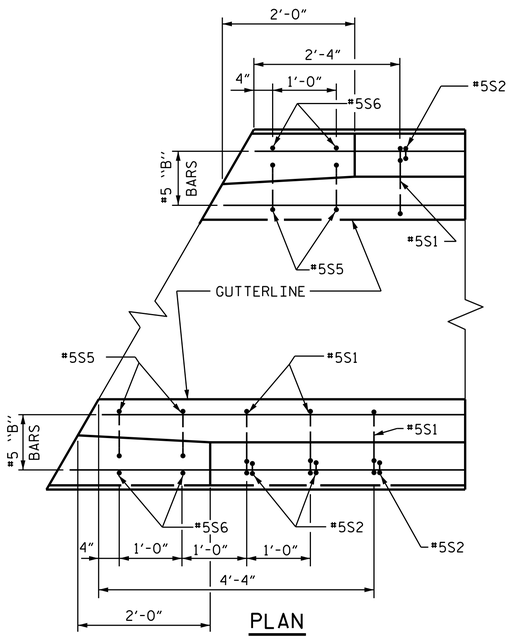

PLAN

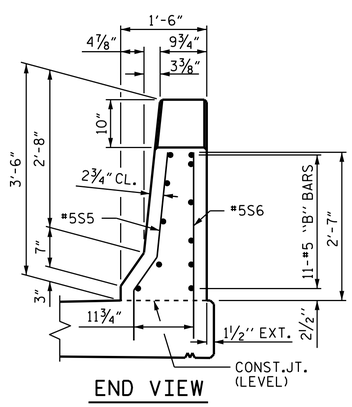

END VIEW

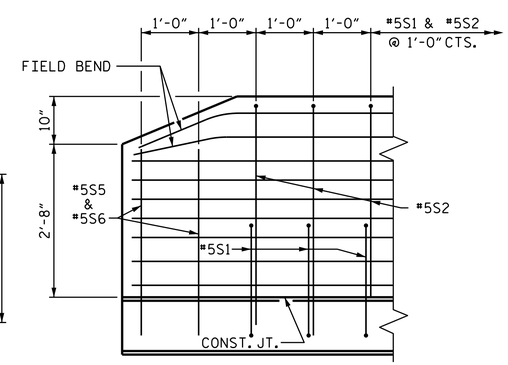

SIDE VIEW

℄ 1/2" EXP. JT. MAT'L HELD IN PLACE WITH GALVANIZED NAILS.
(NOTE: OMIT EXP. JT. MAT'L. WHEN SLIP FORM IS USED.)

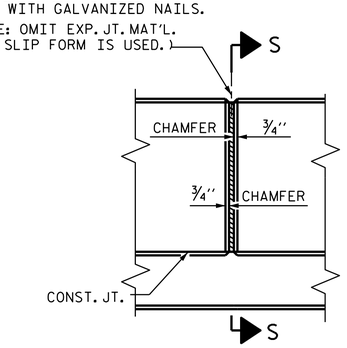

ELEVATION AT EXPANSION JOINTS

END OF RAIL DETAILS

BARRIER RAIL DETAILS

PROJECT NO. R-4903
BLADEN COUNTY
STATION: 46+73.19 -L-

STATE OF NORTH CAROLINA
DEPARTMENT OF TRANSPORTATION
RALEIGH

STANDARD
CONCRETE BARRIER RAIL

(RIGHT LANE)

NORTH CAROLINA PROFESSIONAL SEAL 10730 ENGINEER D. ANDRÉ DAVENPORT, JR.
DocuSigned by: D. André Davenport, Jr. 895DC284FF66495...
10/28/2014

REVISIONS						SHEET NO.
NO.	BY:	DATE:	NO.	BY:	DATE:	S-80
1			3			TOTAL SHEETS
2			4			92

DRAWN BY :	K.D. LAYNE	DATE :	8-22-12
CHECKED BY :	M. K. BEARD	DATE :	10-15-12

DRAWN BY : ARB 5/87	REV. 10/1/11	MAA/GM
CHECKED BY : SJD 9/87	REV. 7/12	MAA/GM
	REV. 10/12	MAA/GM

STR. #3

STD. NO. CBR1

28-OCT-2014 09:05
R:\Structures\Plans\Str*3\R4903_sd_BR_03.dgn
ddavenport