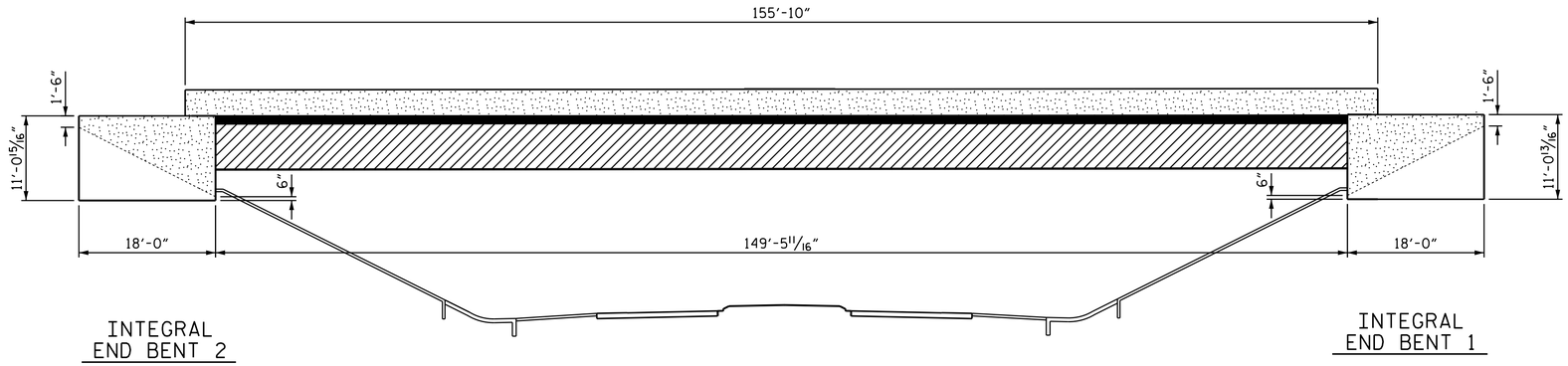

ELEVATION VIEW

(LOOKING UP-STATION -L-)

NOTES

FOR AESTHETIC BRIDGE TREATMENTS, SEE SPECIAL PROVISIONS.

APPLY CONCRETE STAINING TO THE FOLLOWING:
- OUTSIDE OF END BENT WING WALLS
- BACK OF BARRIER RAIL
- EDGE OF DECK
- BOTTOM OF OVERHANG

PAINT EXTERIOR GIRDER #1 ELEMENTS AS FOLLOWS:
- OUTSIDE BOTTOM OF TOP FLANGE
- OUTSIDE OF WEB
- OUTSIDE TOP OF BOTTOM FLANGE
- OUTSIDE EDGE OF BOTTOM FLANGE
- BOTTOM OF BOTTOM FLANGE
- OUTSIDE EXPOSED COMPONENTS OF BOLTED FIELD SPLICE

HOLD-DOWN PLATES FOR GUARDRAIL ATTACHMENTS SHALL BE PAINTED TO MATCH COLOR OF BARRIER RAIL.

PVC DECK DRAINS AND CONNECTORS SHALL BE PAINTED TO MATCH COLOR OF EXTERIOR GIRDER #1.

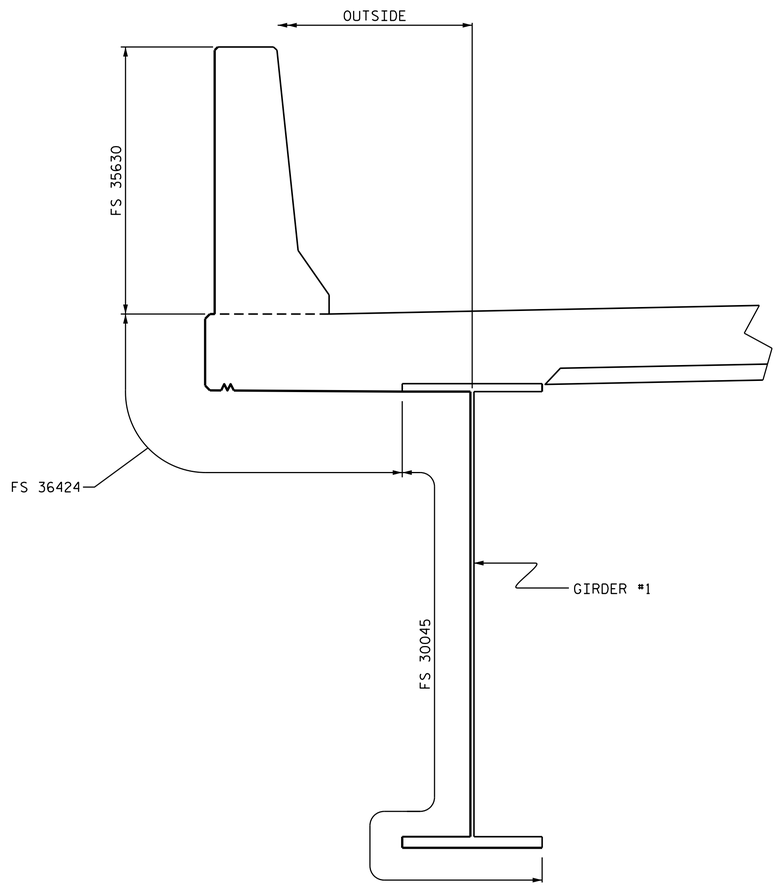

PART SECTION GIRDER #1

(PVC DECK DRAINS AND CONNECTORS NOT SHOWN)

FEDERAL STD. COLOR

	FS 35630
	FS 36424
	FS 30045

QUANTITIES	
CONCRETE STAINING	1,311 SQ. FT.
PAINTING OF STRUCTURAL STEEL	1,442 SQ. FT.

PROJECT NO. R-4903

BLADEN COUNTY

STATION: 46+73.19 -L-

STATE OF NORTH CAROLINA
DEPARTMENT OF TRANSPORTATION
RALEIGH

AESTHETIC TREATMENT PLAN

(LEFT LANE)

NORTH CAROLINA PROFESSIONAL SEAL 10730 ENGINEER D. ANDRE DAVENPORT JR.

DocuSigned by:
D. André Davenport, Jr.
895DC284F664495...
10/28/2014

REVISIONS						SHEET NO.
NO.	BY:	DATE:	NO.	BY:	DATE:	S-62
1			3			TOTAL SHEETS
2			4			92

STR. #2

DRAWN BY : D.A. DAVENPORT DATE : 10/01/14
CHECKED BY : L.E. SUTTON DATE : 10/02/14

28-OCT-2014 09:04
R:\Structures\Plans\Str#2\R4903_sd_AT_02.dgn
dadavenport