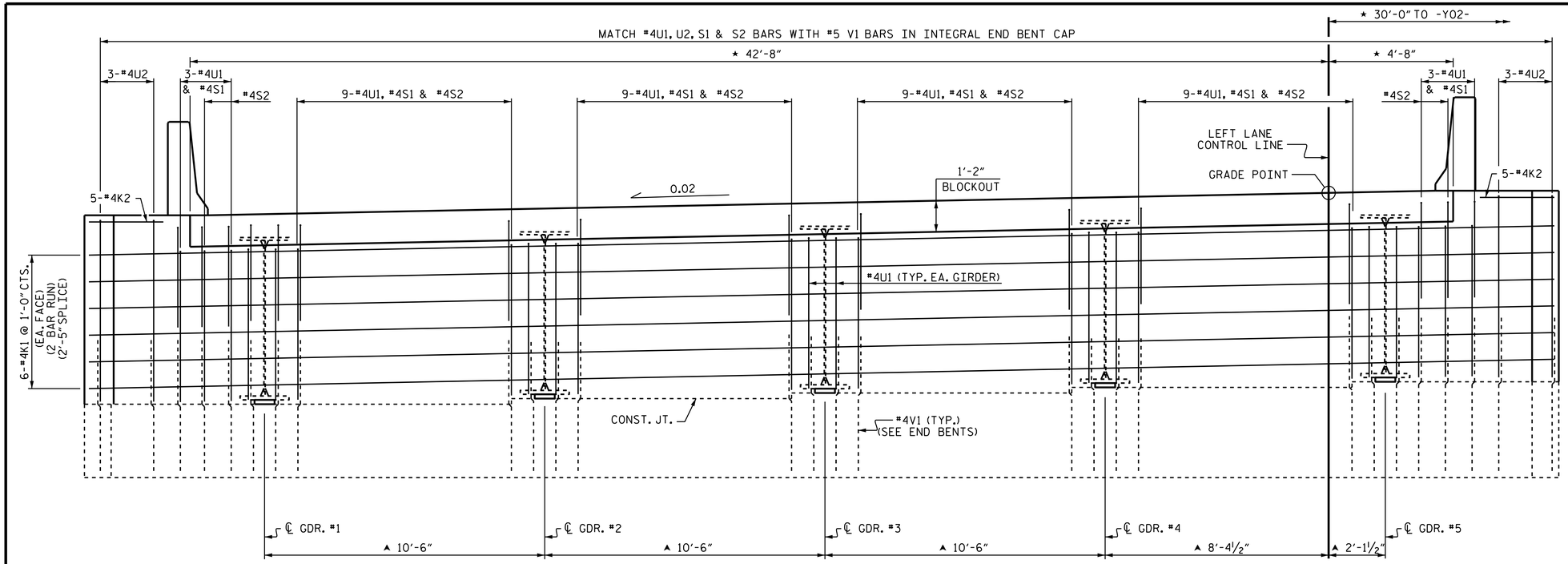

TYPICAL SECTION THROUGH INTEGRAL END BENT

DECK REINFORCEMENT NOT SHOWN FOR CLARITY
★ RADIAL DIMENSIONS
▲ RADIAL DIMENSIONS THRU WORK POINT

NOTES

COUPLING IN DRAIN PIPE WILL BE PERMITTED AS APPROVED BY THE ENGINEER.

TOP OF FLOOR DRAIN TO BE SET ⅜" BELOW SURFACE OF SLAB.

4 - ½" SQUARE LUGS TO BE GLUED TO THE PVC PLASTIC PIPE AT EQUAL SPACES AROUND THE PIPE DRAIN APPROXIMATELY 4" FROM THE TOP OF THE PIPE.

BOLT SIZE TO BE SAME AS DIAPHRAGMS AND CROSS FRAME CONNECTIONS. STAINLESS STEEL WORM DRIVE HOSE CLAMP SHALL BE COMMERCIAL QUALITY.

THE 6" Ø PVC PLASTIC PIPE AND FITTINGS SHALL BE SCHEDULE 40 AND CONFORM TO ASTM D1785.

PVC DECK DRAINS SHALL BE PAINTED WITH TWO COATS OF PRIMER THAT MATCHES THE EXTERIOR GIRDER COLOR AND MEETS THE REQUIREMENTS OF ARTICLE 1080-11 OF THE STANDARD SPECIFICATIONS. EACH COAT SHALL BE 2 DRY MILS THICK. DECK DRAINS SHALL BE ROUGHENED PRIOR TO PAINTING. NO SEPARATE PAYMENT SHALL BE MADE FOR PAINTING PVC DECK DRAINS AS THIS IS CONSIDERED INCIDENTAL TO THE PAY ITEM FOR REINFORCED CONCRETE DECK SLAB.

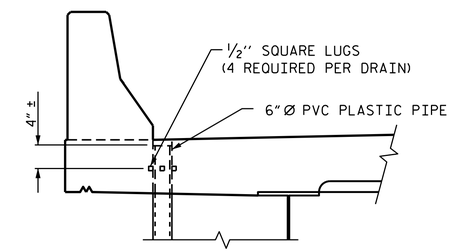

ELEVATION

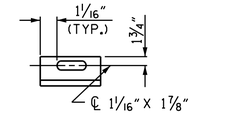

SECTION B-B

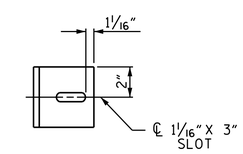

SECTION A-A

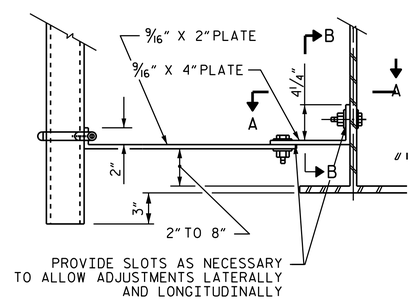

DRAIN CONNECTOR DETAILS

(4 DRAINS REQUIRED)

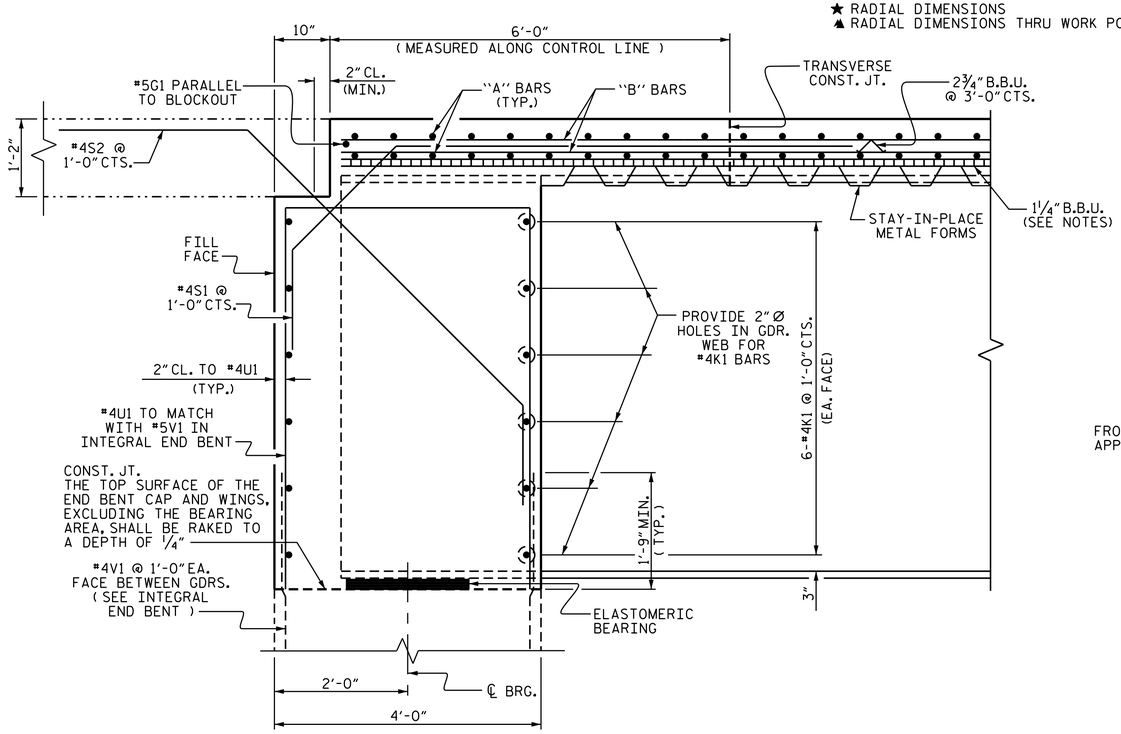

END OF GIRDER DETAIL AT INTEGRAL END BENT

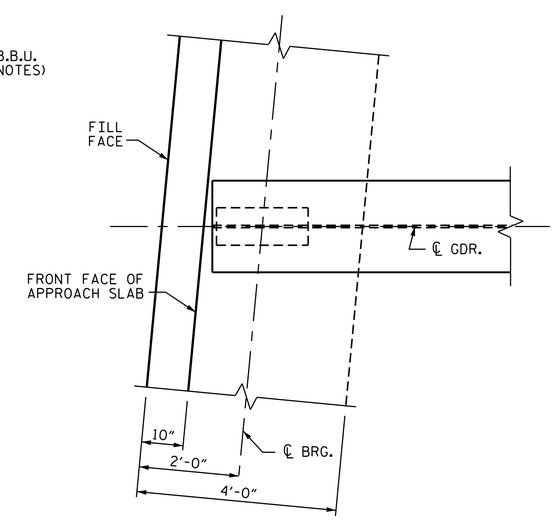

PLAN OF GIRDER AT INTEGRAL END BENT

PROJECT NO. R-4903
BLADEN COUNTY
STATION: 46+73.19 -L-

SHEET 2 OF 2

STATE OF NORTH CAROLINA
DEPARTMENT OF TRANSPORTATION
RALEIGH

SUPERSTRUCTURE

TYPICAL SECTION

(LEFT LANE)

NORTH CAROLINA PROFESSIONAL SEAL 10730 ENGINEER D. ANDRÉ DAVENPORT, JR.

Docusigned by: D. André Davenport, Jr. 895DC284F664495... 10/28/2014

REVISIONS								SHEET NO.
NO.	BY:	DATE:	NO.	BY:	DATE:			S-39
1			3					TOTAL SHEETS
2			4					92

STR. #2

DRAWN BY :	K.D. LAYNE	DATE :	8-22-12
CHECKED BY :	M. K. BEARD	DATE :	10-15-12
DESIGN ENGINEER OF RECORD:	T. M. GARRISON	DATE :	04/12/13

28-OCT-2014 09:03
R:\Structures\Plans\Str#2\R4903_sd_TS_02.dgn
dddavenport