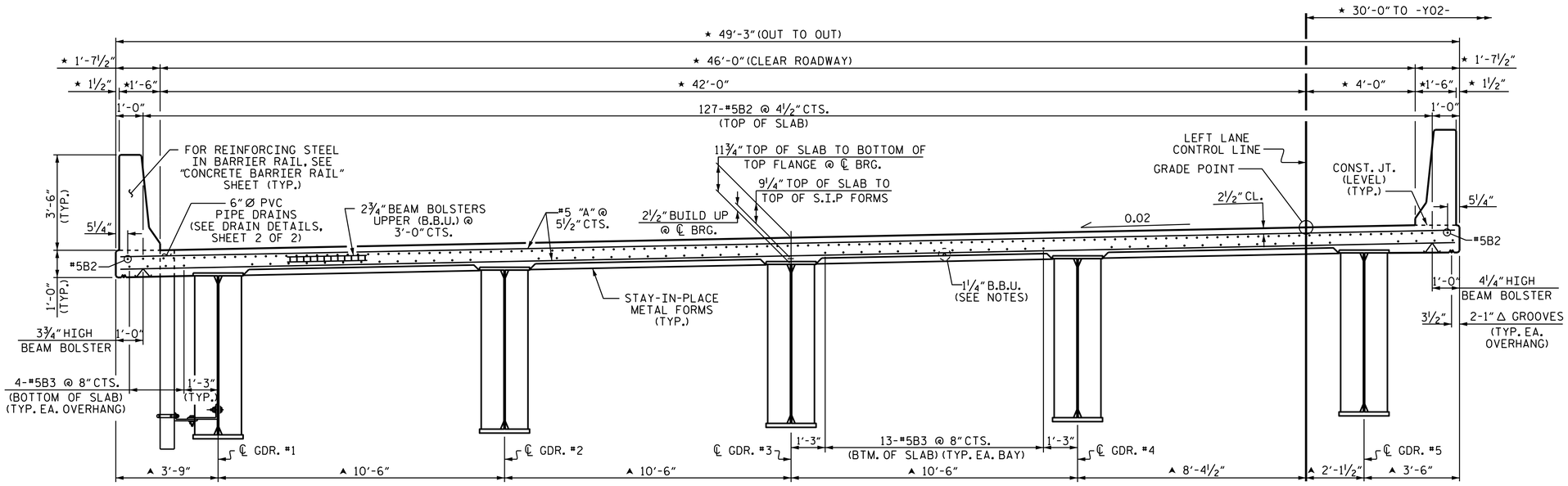

TYPICAL SECTION @ INTEGRAL END BENT

★ RADIAL DIMENSIONS
▲ RADIAL DIMENSIONS THROUGH WORK POINT

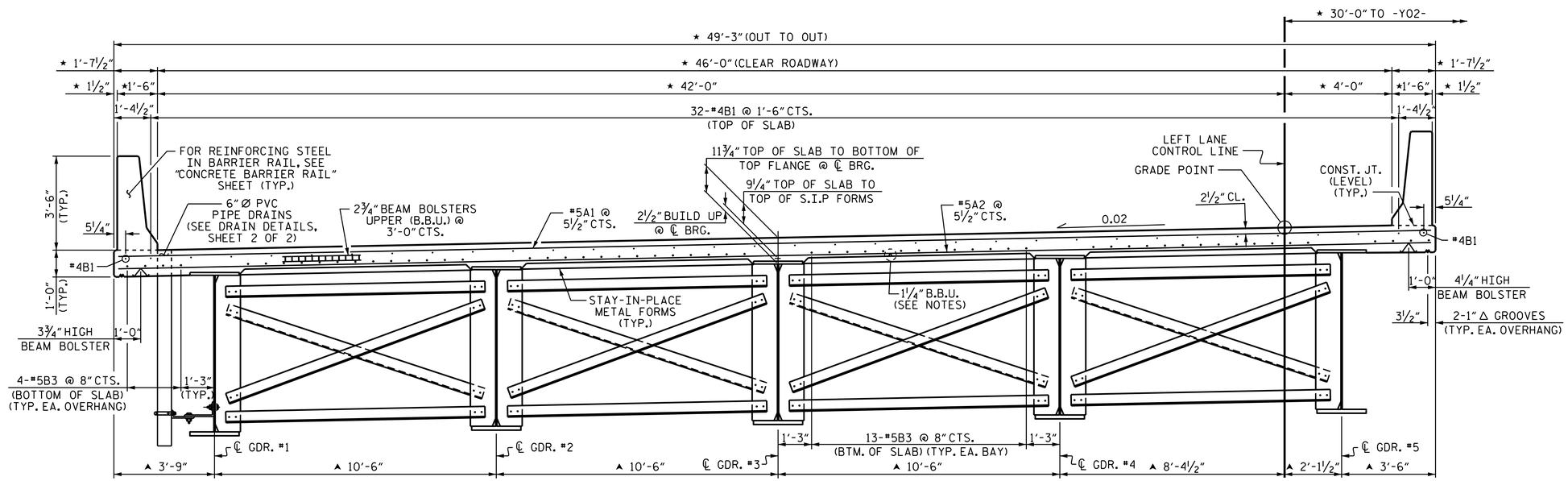

TYPICAL SECTION @ INTERMEDIATE DIAPHRAGM

★ RADIAL DIMENSIONS
▲ RADIAL DIMENSIONS THROUGH WORK POINT

NOTES

PROVIDE 1¼" HIGH BEAM BOLSTERS UPPER AT 4'-0" CTS. ATOP THE METAL STAY-IN-PLACE FORMS TO SUPPORT THE BOTTOM MAT OF 'A' BARS. WHEN USING REMOVABLE FORMS, PROVIDE CONTINUOUS HIGH CHAIRS FOR METAL DECK (C.H.C.M.) @ 4'-0" CTS. WITH A HEIGHT TO SUPPORT THE BOTTOM MAT OF 'A' BARS A CLEAR DISTANCE OF 2½" ABOVE THE TOP OF THE REMOVABLE FORM.

METAL STAY-IN-PLACE FORMS SHALL NOT BE WELDED TO GIRDER FLANGES IN THE ZONES REQUIRING CHARPY V-NOTCH TEST. SEE STRUCTURAL STEEL DETAIL SHEETS.

PREVIOUSLY CAST CONCRETE SHALL HAVE ATTAINED A MINIMUM COMPRESSIVE STRENGTH OF 3,000 PSI BEFORE ADDITIONAL CONCRETE IS CAST IN THE SPAN.

BARRIER RAIL SHALL NOT BE CAST UNTIL ALL SLAB CONCRETE HAS BEEN CAST AND HAS REACHED A MINIMUM COMPRESSIVE STRENGTH OF 3,000 PSI.

STRUCTURAL STEEL ERECTION SHALL BE COMPLETE BEFORE FALSEWORK OR FORMS ARE PLACED ON THE SPAN.

THE CONTRACTOR MAY, WHEN NECESSARY, PROPOSE A SCHEME FOR AVOIDING INTERFERENCE BETWEEN METAL STAY-IN-PLACE FORM SUPPORTS OR FORMS AND GIRDER STIFFENERS OR CONNECTOR PLATES. THE PROPOSAL SHALL BE INDICATED, AS APPROPRIATE, ON EITHER THE STEEL WORKING DRAWINGS OR THE METAL STAY-IN-PLACE FORM WORKING DRAWINGS.

FOR DETAILS OF CONCRETE STAINING AND PAINTING OF STRUCTURAL STEEL ON THE LEFT SIDE OF THIS STRUCTURE, SEE "AESTHETIC TREATMENT PLAN" SHEET.

PROJECT NO. R-4903
BLADEN COUNTY
STATION: 46+73.19 -L-

SHEET 1 OF 2

STATE OF NORTH CAROLINA
DEPARTMENT OF TRANSPORTATION
RALEIGH

SUPERSTRUCTURE

TYPICAL SECTION

(LEFT LANE)

NORTH CAROLINA PROFESSIONAL SEAL 10730 ENGINEER D. ANDRE DAVENPORT, JR.

DocuSigned by: D. André Davenport, Jr. 895DC284F664495... 10/28/2014

REVISIONS						SHEET NO.
NO.	BY:	DATE:	NO.	BY:	DATE:	S-38
1			3			TOTAL SHEETS
2			4			92

STR. #2

DRAWN BY : K.D. LAYNE DATE : 8-22-12
CHECKED BY : M. K. BEARD DATE : 10-15-12
DESIGN ENGINEER OF RECORD: T. M. GARRISON DATE : 04/12/13

28-OCT-2014 09:03
R:\Structures\Plans\Str#2\R4903_sd_TS_02.dgn
dadavenport