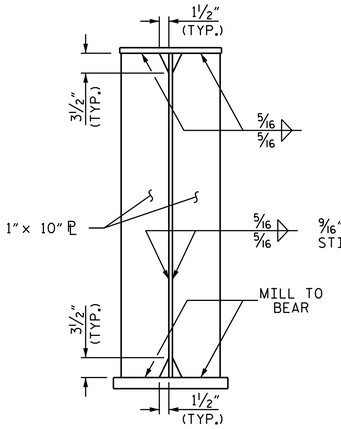

BEARING STIFFENER

(AT END BENTS)

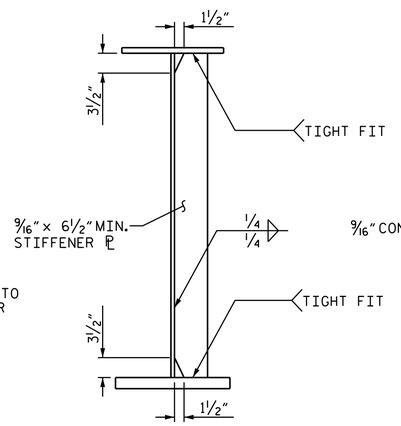

TRANSVERSE STIFFENER

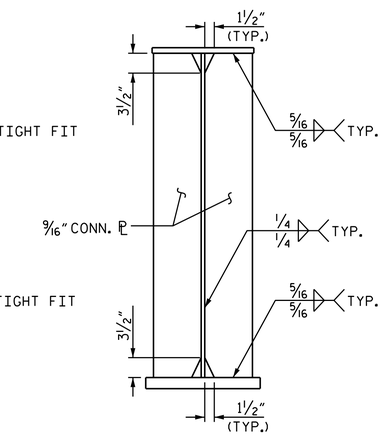

CONNECTOR PLATE DETAIL

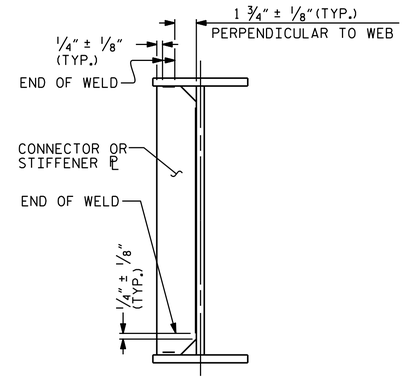

TYPICAL STIFFENER OR CONNECTOR PLATE CONNECTIONS

WELD TERMINATION DETAILS

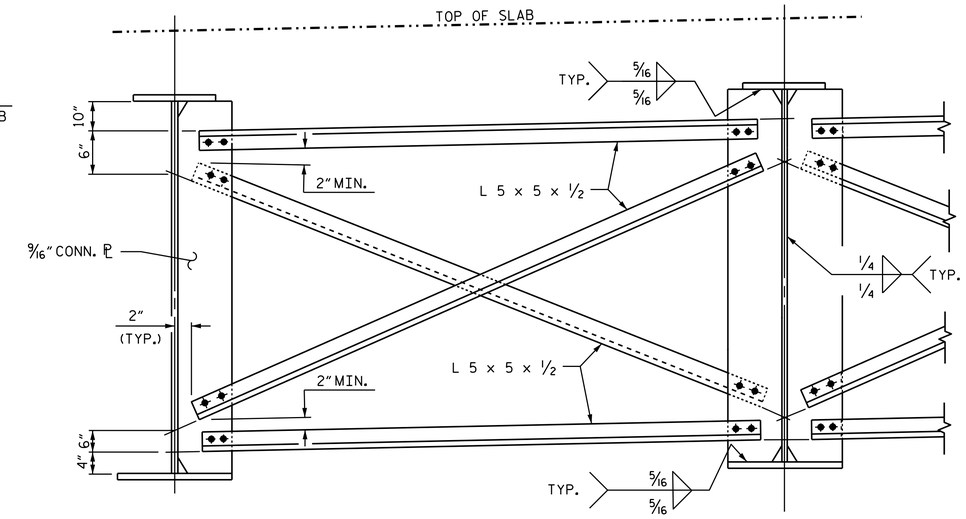

TYPICAL INTERMEDIATE DIAPHRAGM D1

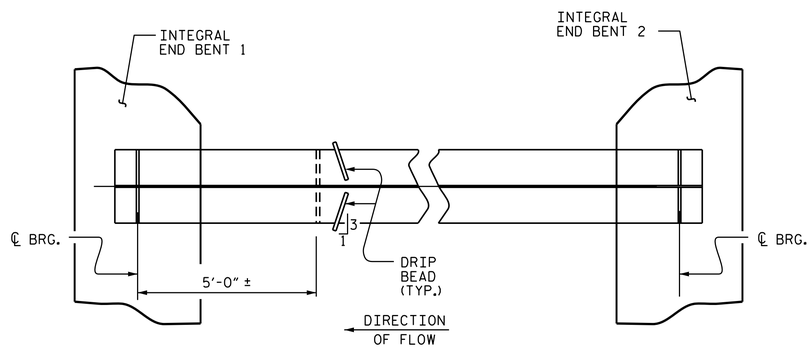

PART PLAN - BOTTOM FLANGE

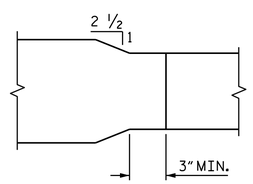

PLAN - FLANGE SPLICE

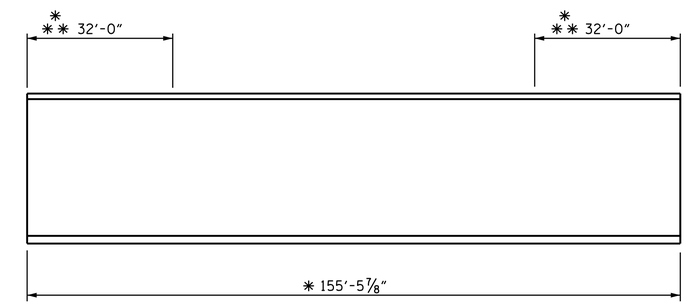

CHARPY V-NOTCH TEST FOR GIRDERS

* CHARPY V-NOTCH TESTS ARE REQUIRED FOR ALL TOP OR BOTTOM FLANGE PLATES WHICH FALL WITHIN THESE LIMITS, ALL WEB PLATES AND ALL SPLICE PLATES. IF A PERMITTED SHOP FLANGE SPLICE IS NOT USED, CHARPY V-NOTCH TESTS WILL BE REQUIRED FOR THE ENTIRE FLANGE PLATE. FOR CHARPY V-NOTCH TESTS, SEE ARTICLE 1072-7 OF THE STANDARD SPECIFICATIONS.

** NO WELDING OF FORMS OR FALSEWORK TO THE TOP FLANGE WILL BE PERMITTED IN THIS REGION.

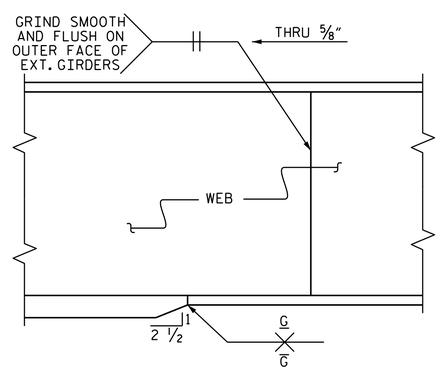

ELEVATION

TYPICAL FLANGE AND WEB BUTT JOINT

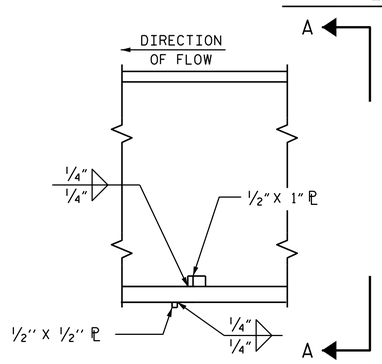

SECTION

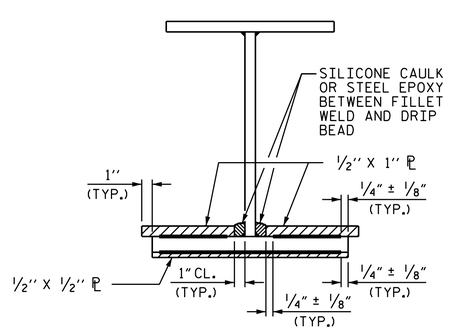

VIEW A-A

DRIP BEAD DETAILS

PROJECT NO. R-4903

BLADEN COUNTY

STATION: 46+73.19 -L-

SHEET 3 OF 3

STATE OF NORTH CAROLINA
DEPARTMENT OF TRANSPORTATION
RALEIGH

SUPERSTRUCTURE

STRUCTURAL STEEL

(LEFT LANE)

NORTH CAROLINA PROFESSIONAL SEAL 10730 ENGINEER D. ANDRE DAVENPORT, JR.

Docusigned by: D. André Davenport, Jr. 895DC284F664E0 10/28/2014

REVISIONS						SHEET NO.
NO.	BY:	DATE:	NO.	BY:	DATE:	S-47
1			3			TOTAL SHEETS
2			4			92

STR. #2

DRAWN BY :	K.D. LAYNE	DATE :	8-22-12
CHECKED BY :	M. K. BEARD	DATE :	10-15-12
DESIGN ENGINEER OF RECORD:	T. M. GARRISON	DATE :	04/12/13

28-OCT-2014 09:03
R:\Structures\Plans\Str#2\R4903_sd_SS_02.dgn
dadavenport