NOTES

THE ELASTOMER IN THE STEEL REINFORCED BEARINGS SHALL HAVE A SHEAR MODULUS OF 0.160 KSI, IN ACCORDANCE WITH AASHTO M251.

FOR STEEL REINFORCED ELASTOMERIC BEARINGS, SEE SPECIAL PROVISIONS.

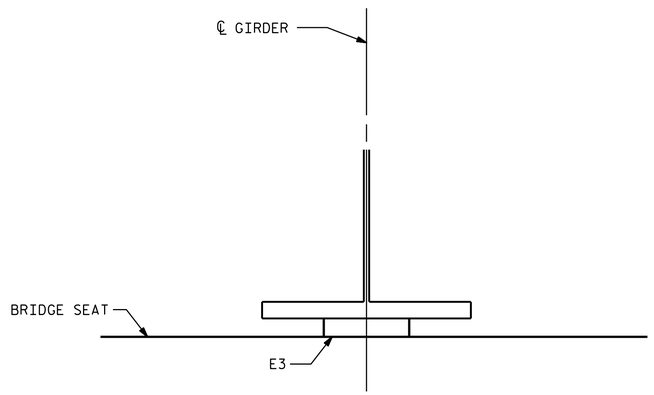

FIXED

END VIEW

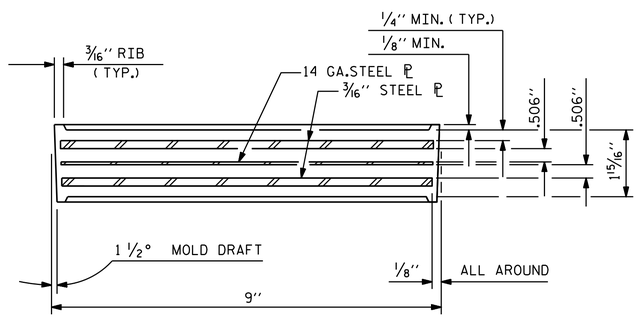

TYPICAL SECTION OF ELASTOMERIC BEARINGS

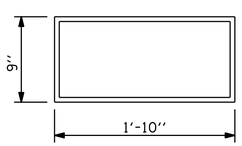

E3 (10 REQ'D)

PLAN VIEW OF ELASTOMERIC BEARING

TYPE IV

MAXIMUM ALLOWABLE SERVICE LOADS	
D.L.+L.L. (NO IMPACT)	
TYPE IV	225 K

PROJECT NO. R-4903

BLADEN COUNTY

STATION: 46+73.19 -L-

STATE OF NORTH CAROLINA
DEPARTMENT OF TRANSPORTATION
RALEIGH

STANDARD

ELASTOMERIC BEARING DETAILS

STEEL SUPERSTRUCTURE

(LEFT LANE)

NORTH CAROLINA PROFESSIONAL SEAL 10730 ENGINEER D. ANDRÉ DAVENPORT, JR.

D. André Davenport, Jr.
10/28/2014

REVISIONS								SHEET NO.
NO.	BY:	DATE:	NO.	BY:	DATE:			S-48
1			3					TOTAL SHEETS
2			4					92

STR. #2

STD. NO. EB3

ASSEMBLED BY : K.D. LAYNE	DATE : 8-22-12		
CHECKED BY : M. K. BEARD	DATE : 10-15-12		
DRAWN BY : WJH 8/89	REV. 5/1/06 TLA/GM	DESIGN ENGINEER OF RECORD:	
CHECKED BY : CRK 8/89	REV. 10/1/11 MAA/GM	T. M. GARRISON	DATE : 04/12/13
	REV. 6/13 AAC/MAA		

28-OCT-2014 09:03
R:\Structures\Plans\Str*2\R4903_sd_BG_02.dgn
dadavenport