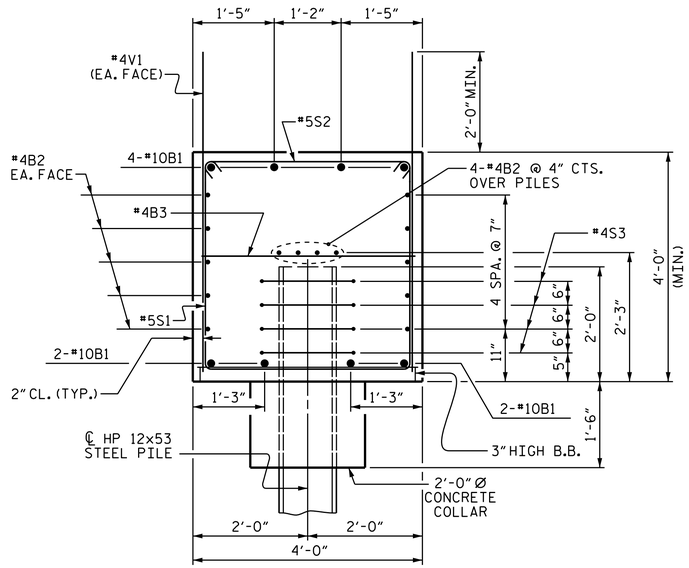

SECTION A-A

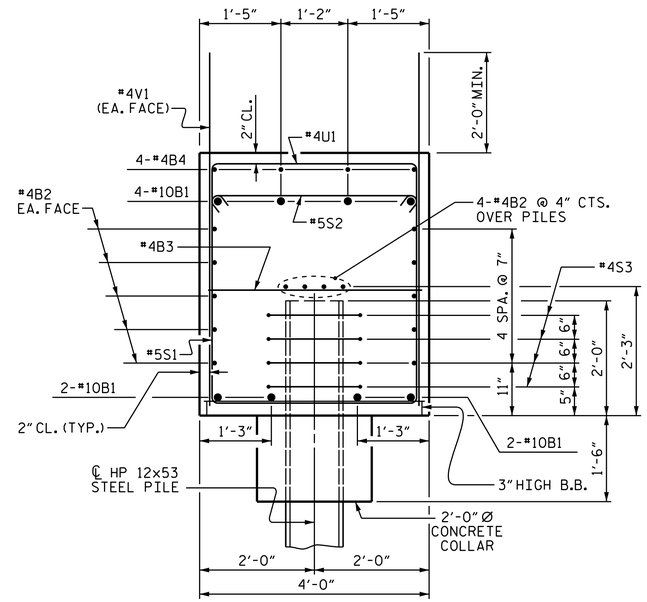

SECTION B-B

BAR TYPES

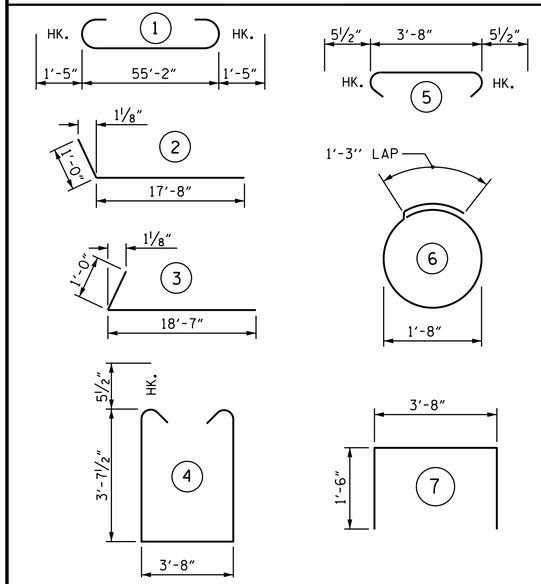

ALL BAR DIMENSIONS ARE OUT TO OUT.

BILL OF MATERIAL
INTEGRAL END BENT 2

BAR	NO.	SIZE	TYPE	LENGTH	WEIGHT
B1	8	#10	1	58'-0"	1997
B2	28	#4	STR	28'-11"	541
B3	14	#4	STR	3'-8"	34
B4	4	#4	STR	23'-6"	63
B5	4	#4	STR	6'-9"	18
H3	16	#6	2	18'-8"	449
H4	20	#6	3	19'-7"	588
S1	63	#5	4	11'-10"	778
S2	63	#5	5	4'-7"	301
S3	40	#4	6	6'-6"	174
U1	19	#4	7	6'-8"	85
V1	106	#4	STR	6'-8"	472
V2	34	#5	STR	11'-7"	411
V3	32	#5	STR	10'-8"	356

REINFORCING STEEL LBS. 6,267

CLASS A CONCRETE C.Y. 42.4

HP 12 X 53 STEEL PILES
NO. 10 LIN. FT. 750

PILE REDRIVES EA. 5

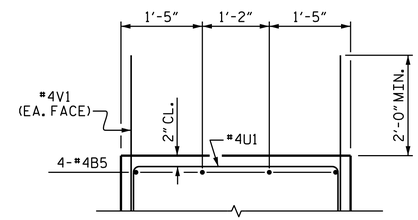

PARTIAL
SECTION C-C

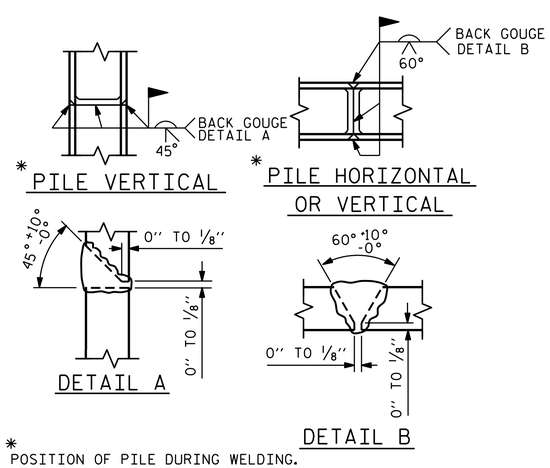

* POSITION OF PILE DURING WELDING.

PILE SPLICE DETAILS

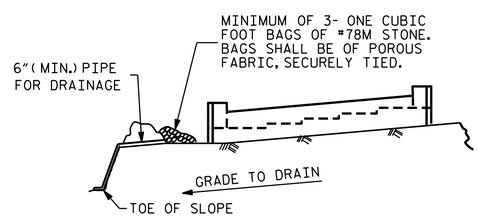

BAGGED STONE AND PIPE SHALL BE PLACED IMMEDIATELY AFTER COMPLETION OF END BENT EXCAVATION. PIPE MAY BE EITHER CONCRETE, CORRUGATED STEEL, CORRUGATED ALUMINUM ALLOY, OR CORRUGATED PLASTIC. PERFORATED PIPE WILL NOT BE ALLOWED.

BAGGED STONE SHALL REMAIN IN PLACE UNTIL THE ENGINEER DIRECTS THAT IT BE REMOVED. THE CONTRACTOR SHALL REMOVE AND DISPOSE OF SILT ACCUMULATIONS AT BAGGED STONE WHEN SO DIRECTED BY THE ENGINEER. BAGS SHALL BE REMOVED AND REPLACED WHENEVER THE ENGINEER DETERMINES THAT THEY HAVE DETERIORATED AND LOST THEIR EFFECTIVENESS.

NO SEPARATE PAYMENT WILL BE MADE FOR THIS WORK AND THE ENTIRE COST OF THIS WORK SHALL BE INCLUDED IN THE UNIT CONTRACT PRICE BID FOR THE SEVERAL PAY ITEMS.

TEMPORARY DRAINAGE AT END BENT

PROJECT NO. R-4903
BLADEN COUNTY
STATION: 46+73.19 -L-

SHEET 3 OF 3

STATE OF NORTH CAROLINA
DEPARTMENT OF TRANSPORTATION
RALEIGH

SUBSTRUCTURE

INTEGRAL
END BENT 2

(LEFT LANE)

NORTH CAROLINA PROFESSIONAL SEAL 10730 ENGINEER D. ANDRÉ DAVENPORT, JR.

DocuSigned by:
D. André Davenport, Jr.
895DC284F664490...
10/28/2014

REVISIONS						SHEET NO.
NO.	BY:	DATE:	NO.	BY:	DATE:	S-58
1			3			TOTAL SHEETS
2			4			92

STR. #2

DRAWN BY : K.D. LAYNE DATE : 12-19-12
CHECKED BY : R.P. PATEL DATE : 12-20-12
DESIGN ENGINEER OF RECORD: B.N. GRADY DATE : 04/12/13

28-OCT-2014 09:04
R:\Structures\Plans\Str*2\R4903_sd_E2_02.dgn
dadavenport