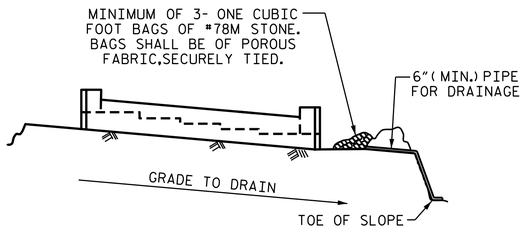

BAGGED STONE AND PIPE SHALL BE PLACED IMMEDIATELY AFTER COMPLETION OF END BENT EXCAVATION. PIPE MAY BE EITHER CONCRETE, CORRUGATED STEEL, CORRUGATED ALUMINUM ALLOY, OR CORRUGATED PLASTIC. PERFORATED PIPE WILL NOT BE ALLOWED.

BAGGED STONE SHALL REMAIN IN PLACE UNTIL THE ENGINEER DIRECTS THAT IT BE REMOVED. THE CONTRACTOR SHALL REMOVE AND DISPOSE OF SILT ACCUMULATIONS AT BAGGED STONE WHEN SO DIRECTED BY THE ENGINEER. BAGS SHALL BE REMOVED AND REPLACED WHENEVER THE ENGINEER DETERMINES THAT THEY HAVE DETERIORATED AND LOST THEIR EFFECTIVENESS.

NO SEPARATE PAYMENT WILL BE MADE FOR THIS WORK AND THE ENTIRE COST OF THIS WORK SHALL BE INCLUDED IN THE UNIT CONTRACT PRICE BID FOR THE SEVERAL PAY ITEMS.

TEMPORARY DRAINAGE AT END BENT

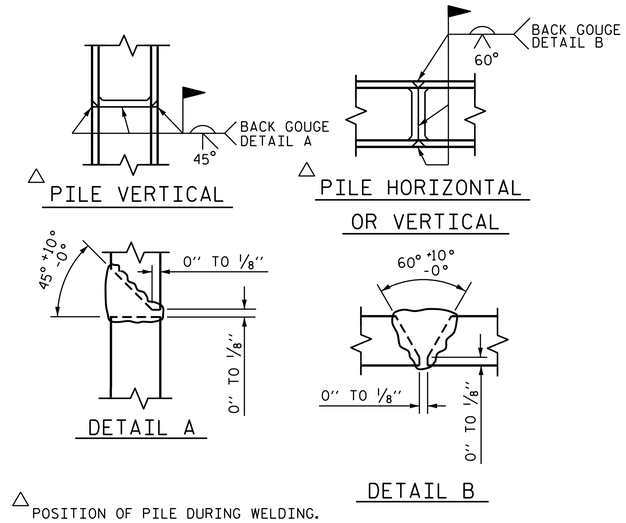

△ POSITION OF PILE DURING WELDING.

PILE SPLICE DETAILS

BAR TYPES

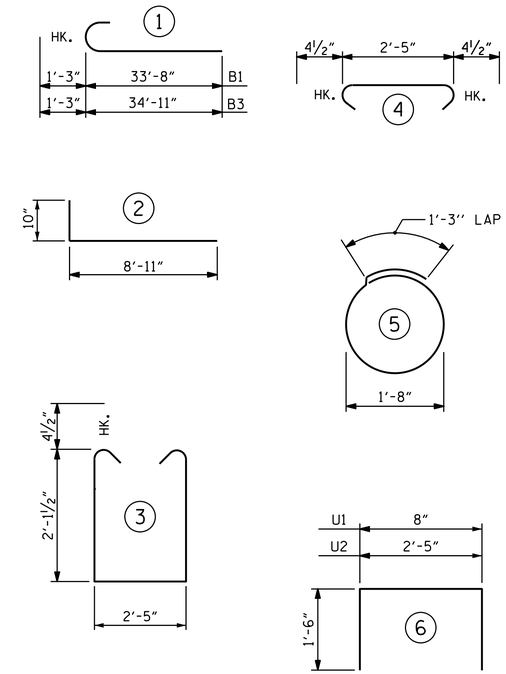

ALL BAR DIMENSIONS ARE OUT TO OUT.

BILL OF MATERIAL
END BENT 2

BAR	NO.	SIZE	TYPE	LENGTH	WEIGHT
B1	8	#9	1	34'-11"	950
B2	24	#4	STR	22'-0"	353
B3	8	#9	1	36'-2"	984
B4	15	#4	STR	2'-5"	24
B5	20	#4	STR	4'-3"	57
B6	4	#4	STR	8'-0"	21
H1	32	#5	2	9'-9"	325
K1	18	#4	STR	22'-0"	265
K2	8	#4	STR	3'-6"	19
S1	93	#4	3	7'-5'	461
S2	93	#4	4	3'-2"	197
S3	16	#4	5	6'-6"	69
U1	54	#4	6	3'-8"	132
U2	27	#4	6	5'-5"	98
V1	108	#5	STR	5'-4"	601
V2	56	#5	STR	7'-1"	414

TOTAL REINFORCING STEEL LBS. 4,970

CLASS A CONCRETE

POUR #1 CAP, COLLARS & LOWER PART OF WINGS 20.6 C.Y.

POUR #2 BACKWALL & UPPER PART OF WINGS 10.2 C.Y.

TOTAL 30.8 C.Y.

HP 12X53 STEEL PILES
NO. 8 LIN. FT. 360

PILE REDRIVES 4 EA.

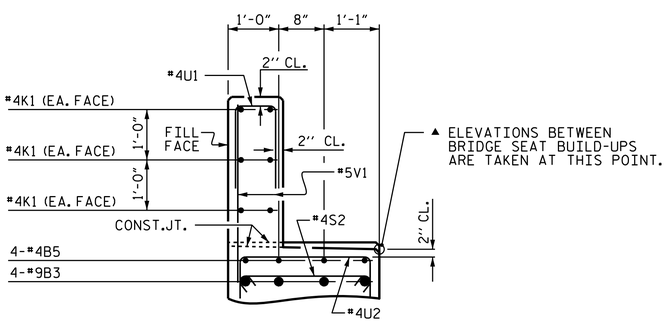

PARTIAL SECTION B-B

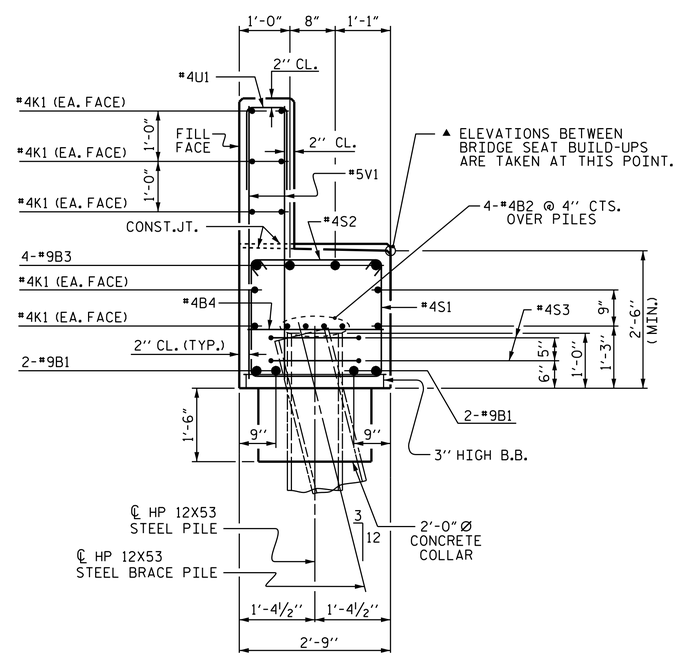

SECTION A-A

PROJECT NO. R-4903
BLADEN COUNTY
STATION: 67+16.50 -L-

SHEET 3 OF 3

STATE OF NORTH CAROLINA
DEPARTMENT OF TRANSPORTATION
RALEIGH

SUBSTRUCTURE

END BENT 2

NORTH CAROLINA PROFESSIONAL SEAL 10730 ENGINEER D. ANDRE' DAVENPORT, JR.

DocuSigned by: D. André Davenport, Jr. 895DC284F664495... 10/28/2014

REVISIONS						SHEET NO.
NO.	BY:	DATE:	NO.	BY:	DATE:	S-29
1			3			TOTAL SHEETS
2			4			92

STR. #1

DRAWN BY : M.K. BEARD DATE : 6/18/12
CHECKED BY : G.W. DICKEY DATE : 6/27/12
DESIGN ENGINEER OF RECORD: R.L. CHESSON DATE : 04/11/13

28-OCT-2014 13:01
R:\Structures\Plans\Str#1\R4903_SD_E2_01.dgn
lsutton