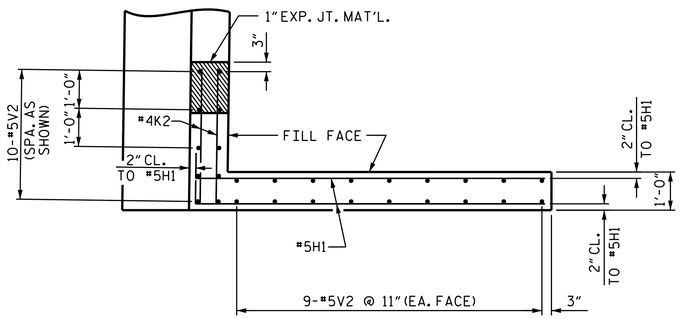

PLAN OF LEFT WING

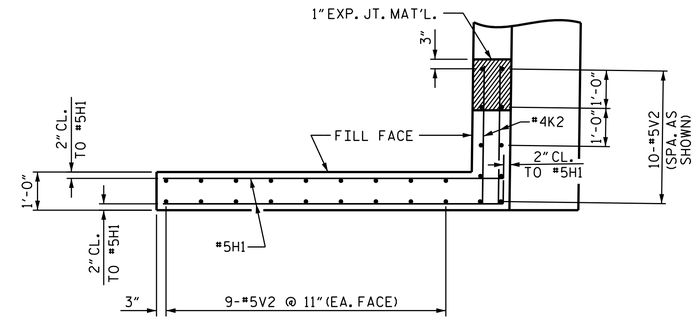

PLAN OF RIGHT WING

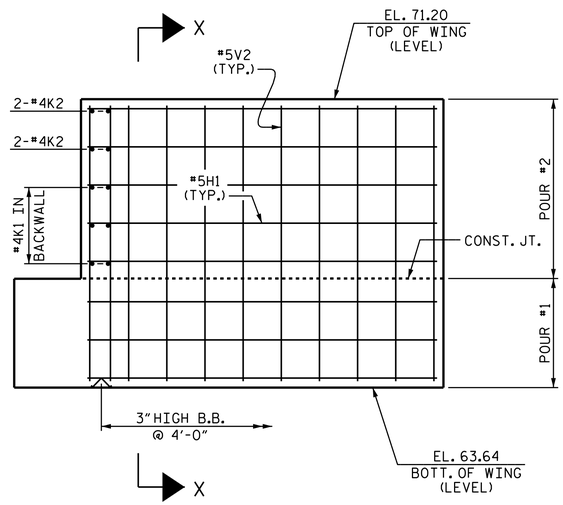

ELEVATION OF LEFT WING

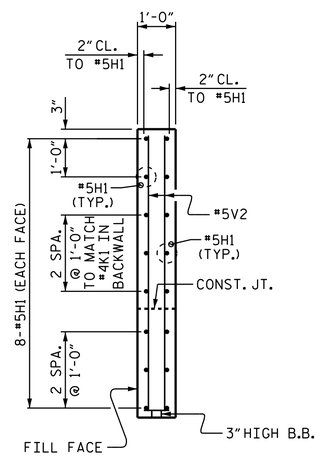

SECTION X-X

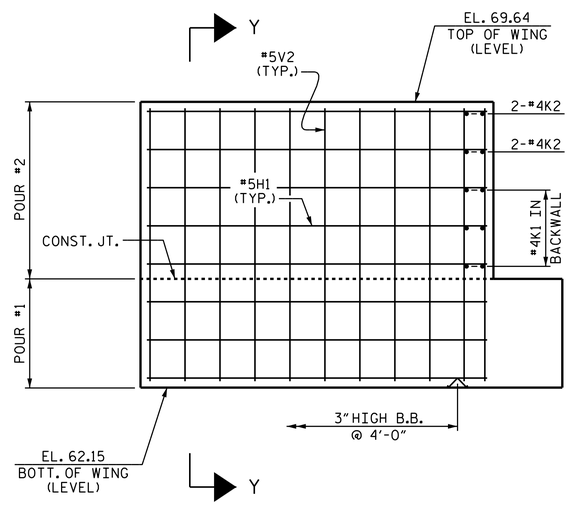

ELEVATION OF RIGHT WING

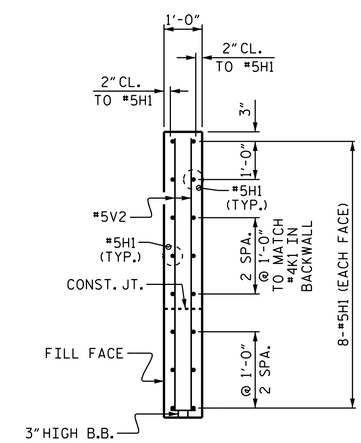

SECTION Y-Y

PROJECT NO. R-4903

BLADEN COUNTY

STATION: 67+16.50 -L-

SHEET 2 OF 3

STATE OF NORTH CAROLINA
DEPARTMENT OF TRANSPORTATION
RALEIGH

SUBSTRUCTURE

END BENT 1

NORTH CAROLINA PROFESSIONAL SEAL 10730 ENGINEER D. ANDRE DAVENPORT, JR.

Docusigned by: D. Andre Davenport, Jr. B950C284F664485...
10/28/2014

REVISIONS						SHEET NO.
NO.	BY:	DATE:	NO.	BY:	DATE:	S-21
1			3			TOTAL SHEETS
2			4			92

STR. #1

DRAWN BY : M.K. BEARD DATE : 6/14/12
CHECKED BY : G.W. DICKEY DATE : 6/27/12
DESIGN ENGINEER OF RECORD: R.L. CHESSON DATE : 04/11/13

27-OCT-2014 09:23
R:\Structures\Plans\Str#1\R4903_SD_E1_01.dgn
dadavenport