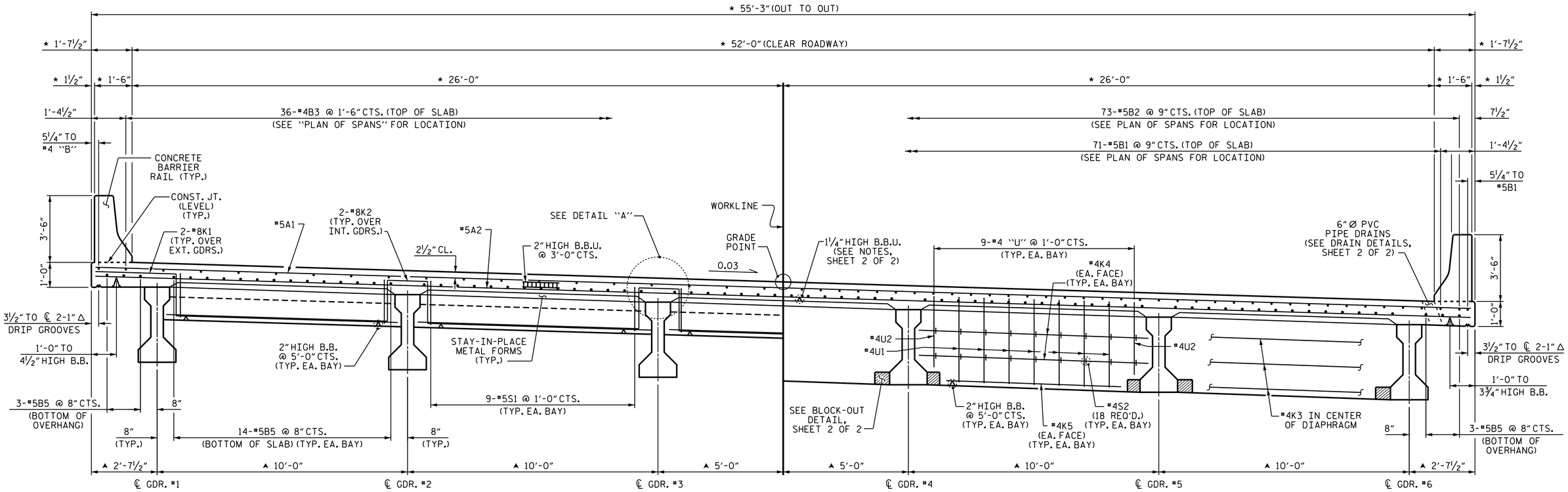

★ RADIAL DIMENSIONS
▲ DIMENSIONS RADIAL THROUGH WORKPOINT

TYPICAL SECTION @ END BENT DIAPHRAGM

TYPICAL SECTION @ BENT DIAPHRAGM

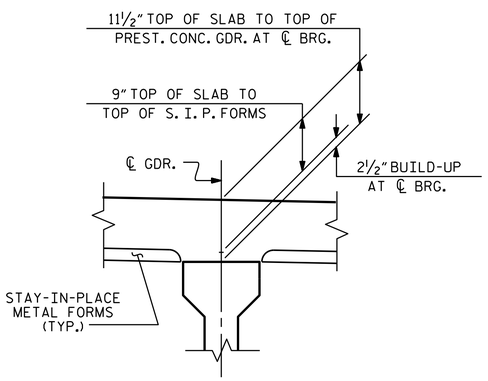

DETAIL "A"

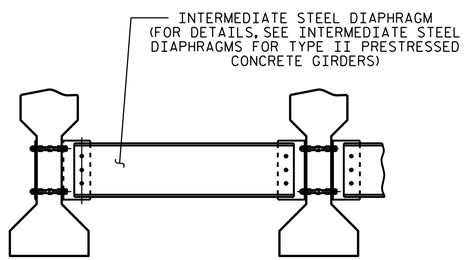

INTERMEDIATE DIAPHRAGM

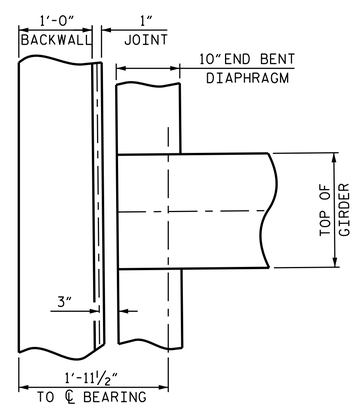

PLAN @ END BENT

PROJECT NO. R-4903
BLADEN COUNTY
STATION: 67+16.50 -L-

SHEET 1 OF 2

STATE OF NORTH CAROLINA
DEPARTMENT OF TRANSPORTATION
RALEIGH

SUPERSTRUCTURE

TYPICAL SECTION

NORTH CAROLINA PROFESSIONAL SEAL 10730 ENGINEER D. ANDRÉ DAVENPORT, JR.

Docusigned by: D. André Davenport, Jr. B95DC284F664495...
10/28/2014

REVISIONS						SHEET NO.
NO.	BY:	DATE:	NO.	BY:	DATE:	S-6
1			3			TOTAL SHEETS
2			4			92

STR. #1

DRAWN BY : J.P. ADAMS DATE : 7/31/12
CHECKED BY : K.D. LAYNE DATE : 8/15/12
DESIGN ENGINEER OF RECORD: B.N. GRADY DATE : 04/11/13

27-OCT-2014 09:22
R:\Structures\Plans\Str#1\R4903_SD_TS_01.dgn
dadavenport