NOTES

STIRRUPS IN CAP MAY BE SHIFTED AS NECESSARY TO CLEAR ANCHOR BOLTS.

GALVANIZE THE TOP OF EACH INTERIOR BENT PILE A MINIMUM OF 25 FEET. GALVANIZE IN ACCORDANCE WITH SECTION 1076 OF THE STANDARD SPECIFICATIONS.

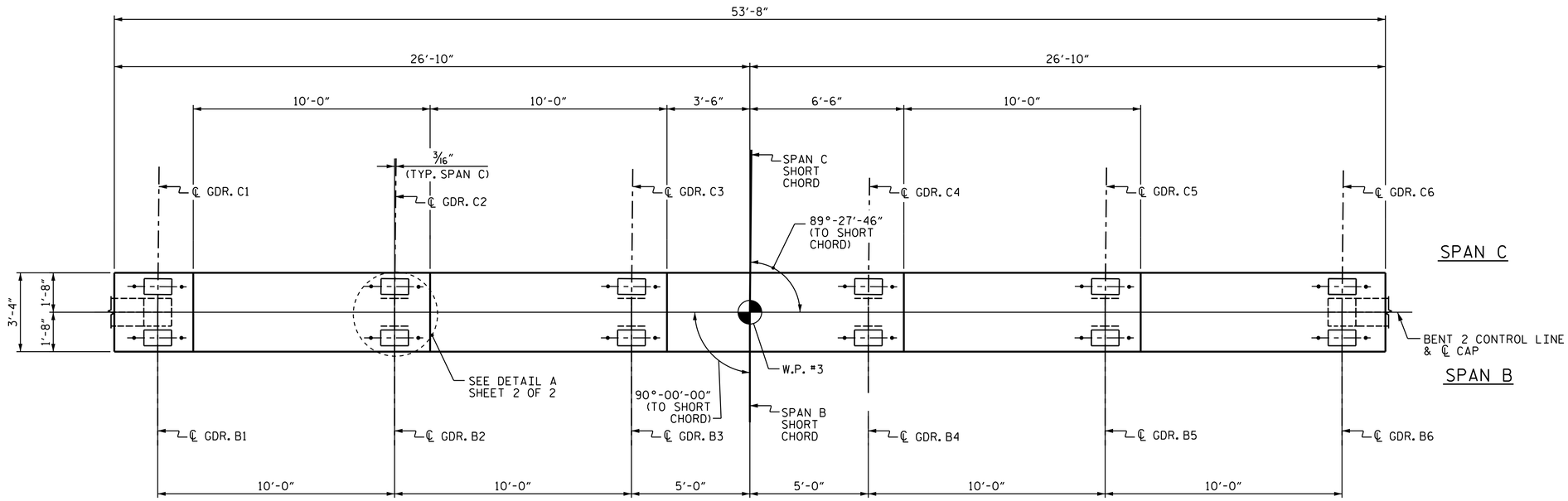

PLAN

TOP OF PILE ELEVATIONS	
1	64.07
2	63.77
3	63.47
4	63.17
5	62.87
6	62.57

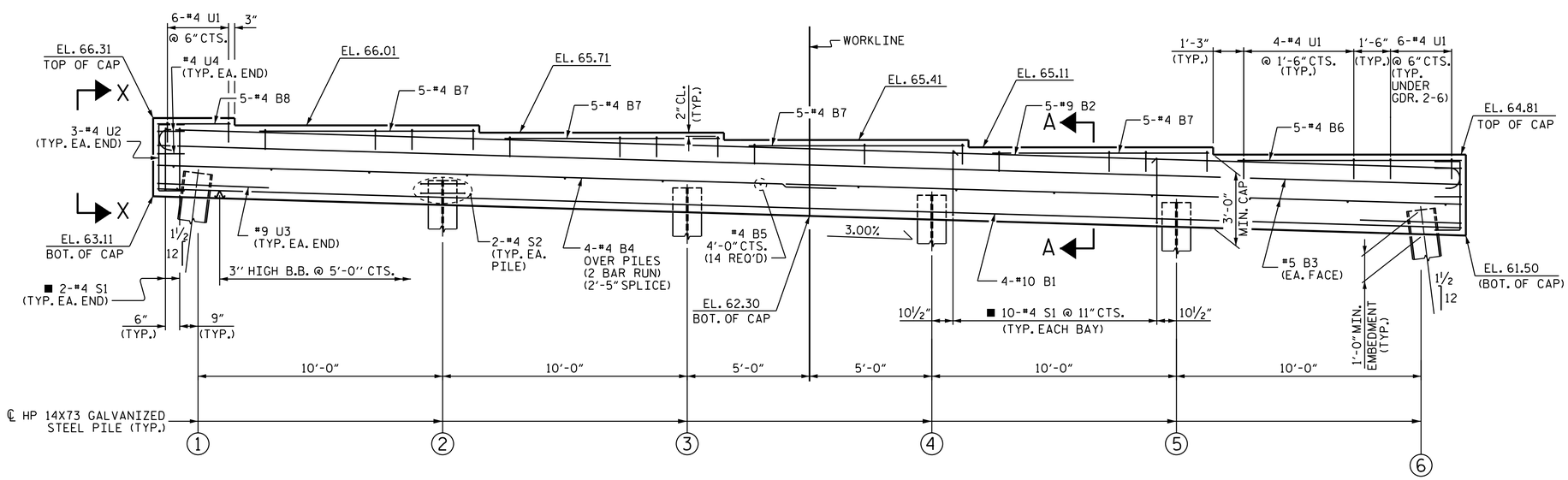

ELEVATION

■ INVERT ALTERNATE STIRRUPS

PROJECT NO. R-4903

BLADEN COUNTY

STATION: 67+16.50 -L-

SHEET 1 OF 2

STATE OF NORTH CAROLINA
DEPARTMENT OF TRANSPORTATION
RALEIGH

SUBSTRUCTURE

BENT 2

NORTH CAROLINA PROFESSIONAL SEAL 10730 ENGINEER D. ANDRÉ DAVENPORT, JR.

DocuSigned by: D. André Davenport, Jr. B95DC284F664495...

10/28/2014

REVISIONS						SHEET NO.
NO.	BY:	DATE:	NO.	BY:	DATE:	S-25
1			3			TOTAL SHEETS
2			4			92

STR. #1

DRAWN BY : R. P. PATEL DATE : 1-8-13
CHECKED BY : K.D. LAYNE DATE : 2-5-13
DESIGN ENGINEER OF RECORD: G.W. DICKEY DATE : 04/11/13

27-OCT-2014 09:23
R:\Structures\Plans\Str#1\R4903_SD_B2_01.dgn
dadavenport