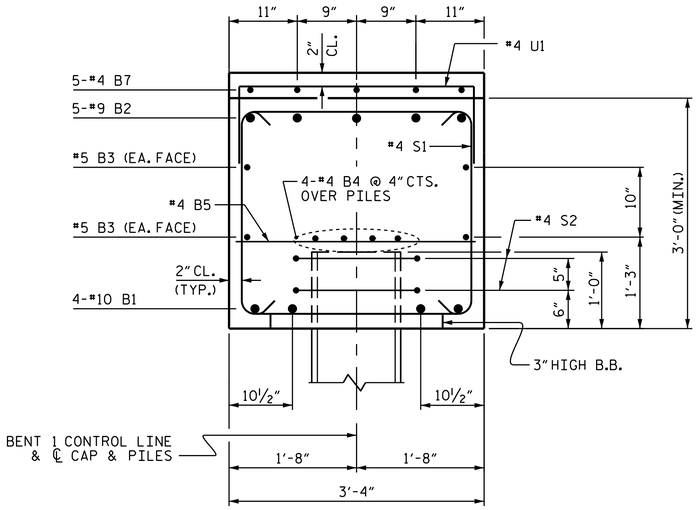

SECTION A-A

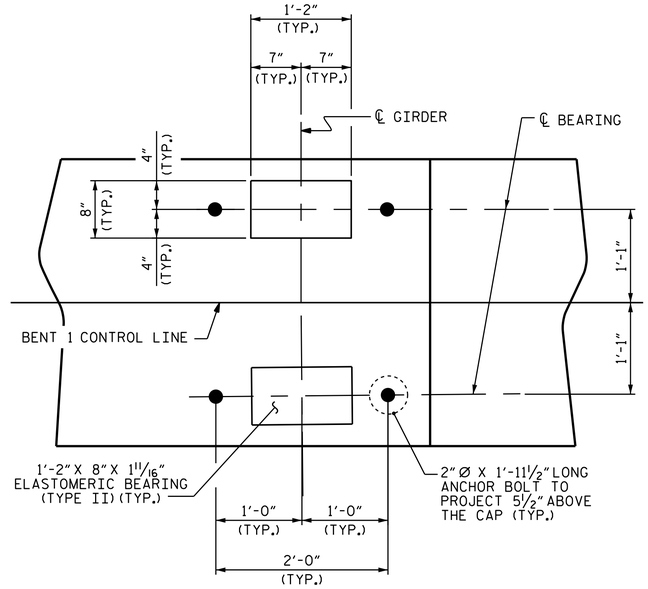

DETAIL A

(TYP. EA. GIRDER)

BAR TYPES

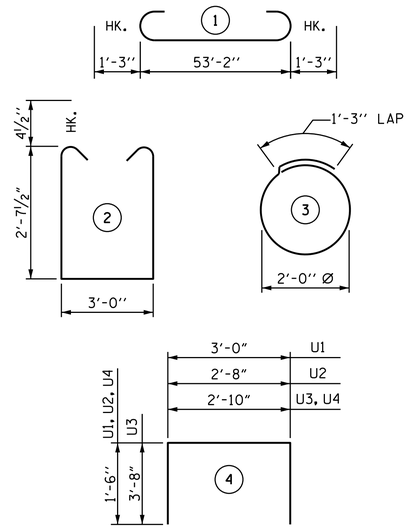

ALL BAR DIMENSIONS ARE OUT TO OUT.

BILL OF MATERIAL

BENT 1

BAR	NO.	SIZE	TYPE	LENGTH	WEIGHT
B1	4	#10	STR	53′-4″	918
B2	5	#9	1	55′-8″	946
B3	4	#5	STR	53′-4″	223
B4	8	#4	STR	27′-11″	149
B5	14	#4	STR	3′-0″	28
B6	5	#4	STR	9-0″	30
B7	20	#4	STR	8′-10″	118
B8	5	#4	STR	3′-0″	10
S1	54	#4	2	9′-0″	325
S2	12	#4	3	7′-7″	61
U1	56	#4	4	6′-0″	224
U2	6	#4	4	5′-8″	23
U3	2	#9	4	10′-2″	69
U4	4	#4	4	5′-10″	16

REINFORCING STEEL	LBS.	3,140
CLASS A CONCRETE	C.Y.	20.9
HP 14X73 GALVANIZED STEEL PILES NO. 6	LIN. FT.	420
PILE REDRIVES	EA.	3

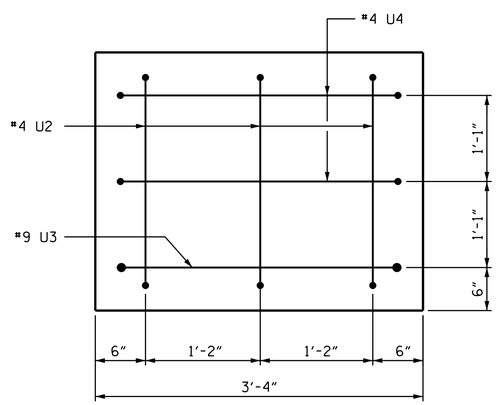

VIEW X-X

(OTHER END SIMILAR)

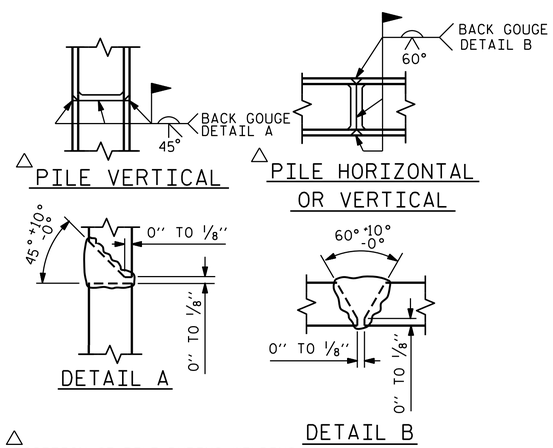

△ POSITION OF PILE DURING WELDING.

PILE SPLICE DETAILS

PROJECT NO. R-4903

BLADEN COUNTY

STATION: 67+16.50 -L-

SHEET 2 OF 2

STATE OF NORTH CAROLINA
DEPARTMENT OF TRANSPORTATION
RALEIGH

SUBSTRUCTURE

BENT 1

NORTH CAROLINA PROFESSIONAL SEAL 10730 ENGINEER D. ANDRÉ DAVENPORT, JR.

DocuSigned by: D. André Davenport, Jr. B95DC284F664495...

10/28/2014

REVISIONS						
NO.	BY:	DATE:	NO.	BY:	DATE:	
1			3			
2			4			

SHEET NO. S-24

TOTAL SHEETS 92

STR. #1

DRAWN BY : R. P. PATEL DATE : 1-8-13
CHECKED BY : K.D. LAYNE DATE : 2-5-13
DESIGN ENGINEER OF RECORD: G.W. DICKEY DATE : 04/11/13

27-OCT-2014 09:23
R:\Structures\Plans\Str#1\R4903_SD_B1_01.dgn
dadavenport