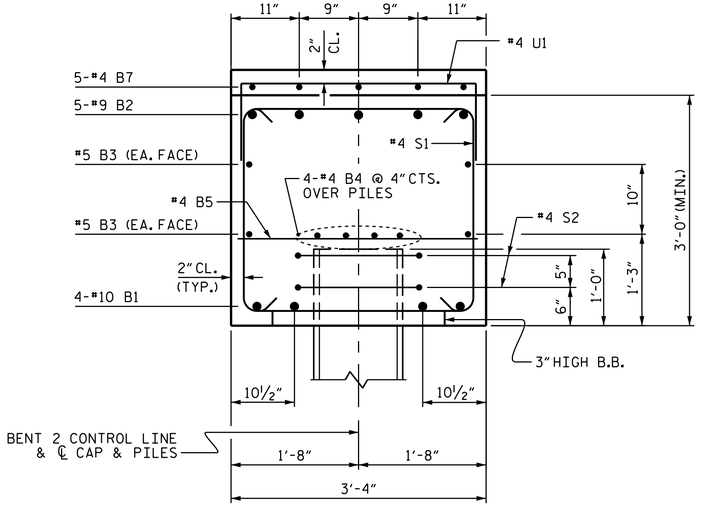

SECTION A-A

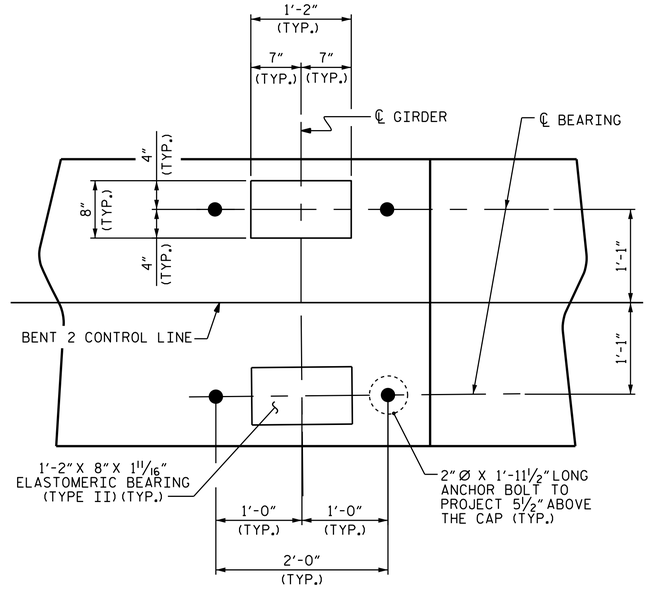

DETAIL A

(TYP. EA. GIRDER)

BAR TYPES

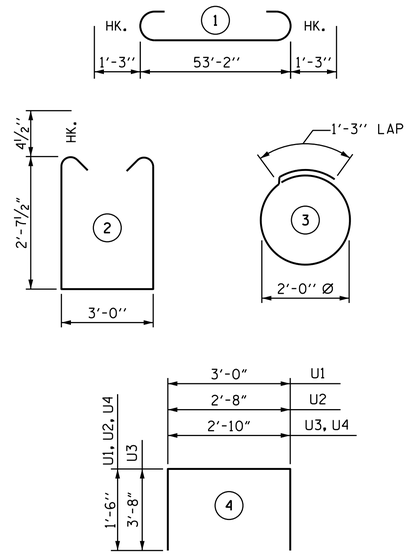

ALL BAR DIMENSIONS ARE OUT TO OUT.

BILL OF MATERIAL

BENT 2

BAR	NO.	SIZE	TYPE	LENGTH	WEIGHT
B1	4	#10	STR	53'-4"	918
B2	5	#9	1	55'-8"	946
B3	4	#5	STR	53'-4"	223
B4	8	#4	STR	27'-11"	149
B5	14	#4	STR	3'-0"	28
B6	5	#4	STR	9'-0"	30
B7	20	#4	STR	8'-10"	118
B8	5	#4	STR	3'-0"	10
S1	54	#4	2	9'-0"	325
S2	12	#4	3	7'-7"	61
U1	56	#4	4	6'-0"	224
U2	6	#4	4	5'-8"	23
U3	2	#9	4	10'-2"	69
U4	4	#4	4	5'-10"	16

REINFORCING STEEL	LBS.	3,140
CLASS A CONCRETE	C.Y.	20.9
HP 14X73 GALVANIZED STEEL PILES NO. 6	LIN. FT.	420
PILE REDRIVES	EA.	3

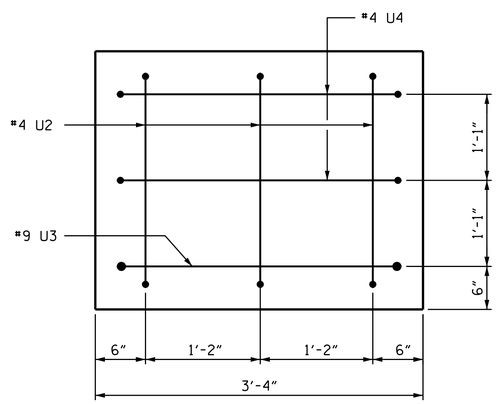

VIEW X-X

(OTHER END SIMILAR)

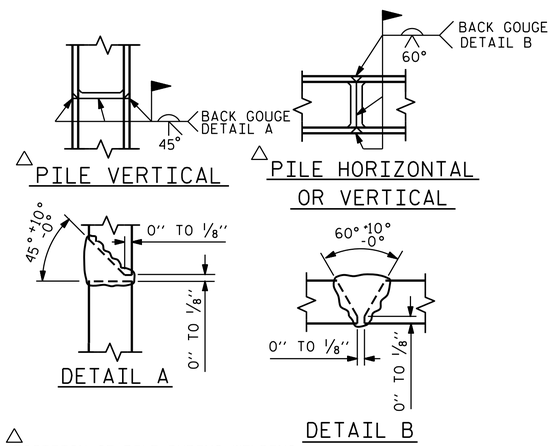

△ POSITION OF PILE DURING WELDING.

PILE SPLICE DETAILS

PROJECT NO. R-4903

BLADEN COUNTY

STATION: 67+16.50 -L-

SHEET 2 OF 2

STATE OF NORTH CAROLINA
DEPARTMENT OF TRANSPORTATION
RALEIGH

SUBSTRUCTURE

BENT 2

NORTH CAROLINA PROFESSIONAL SEAL 10730 ENGINEER D. ANDRE DAVENPORT, JR.

10/28/2014
D. André Davenport, Jr.
B60DC284F664495...
10/28/2014

REVISIONS						
NO.	BY:	DATE:	NO.	BY:	DATE:	
1			3			
2			4			

SHEET NO. S-26

TOTAL SHEETS 92

STR. #1

DRAWN BY :	R. P. PATEL	DATE :	1-8-13
CHECKED BY :	K.D. LAYNE	DATE :	2-5-13
DESIGN ENGINEER OF RECORD:	G.W. DICKEY	DATE :	04/11/13

27-OCT-2014 09:23
R:\Structures\Plans\Str#1\R4903_SD_B2_01.dgn
dadavenport