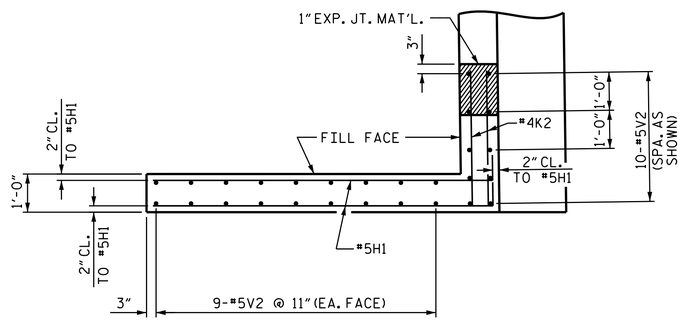

PLAN OF LEFT WING

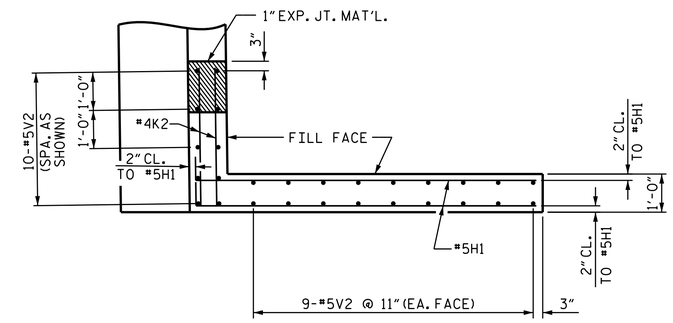

PLAN OF RIGHT WING

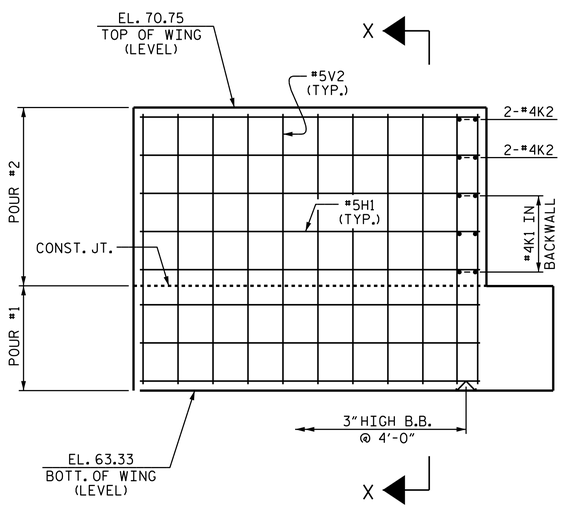

ELEVATION OF LEFT WING

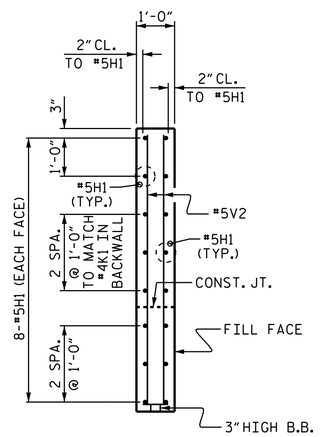

SECTION X-X

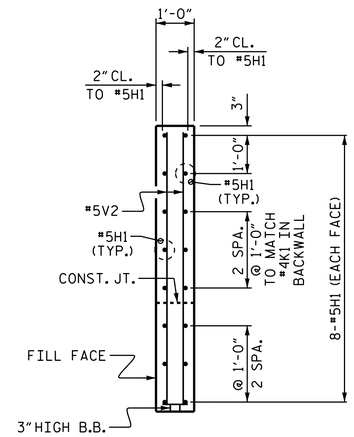

SECTION Y-Y

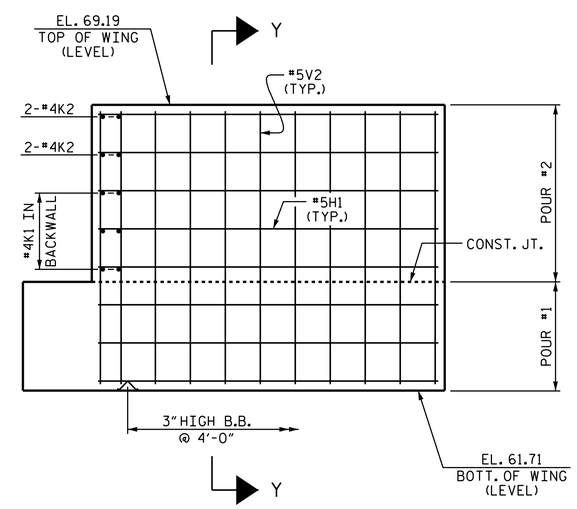

ELEVATION OF RIGHT WING

PROJECT NO. R-4903

BLADEN COUNTY

STATION: 67+16.50 -L-

SHEET 2 OF 3

STATE OF NORTH CAROLINA
DEPARTMENT OF TRANSPORTATION
RALEIGH

SUBSTRUCTURE

END BENT 2

NORTH CAROLINA PROFESSIONAL SEAL 10730 ENGINEER D. ANDRE DAVENPORT JR.

DocuSigned by: D. Andre Davenport, Jr. B95DC284F664495...

10/28/2014

REVISIONS								SHEET NO.
NO.	BY:	DATE:	NO.	BY:	DATE:			S-28
1			3					TOTAL SHEETS
2			4					92

STR. #1

DRAWN BY : M.K. BEARD DATE : 6/18/12
CHECKED BY : G.W. DICKEY DATE : 6/27/12
DESIGN ENGINEER OF RECORD: R.L. CHESSON DATE : 04/11/13

27-OCT-2014 09:23
R:\Structures\Plans\Str#1\R4903_SD_E2_01.dgn
dadavenport