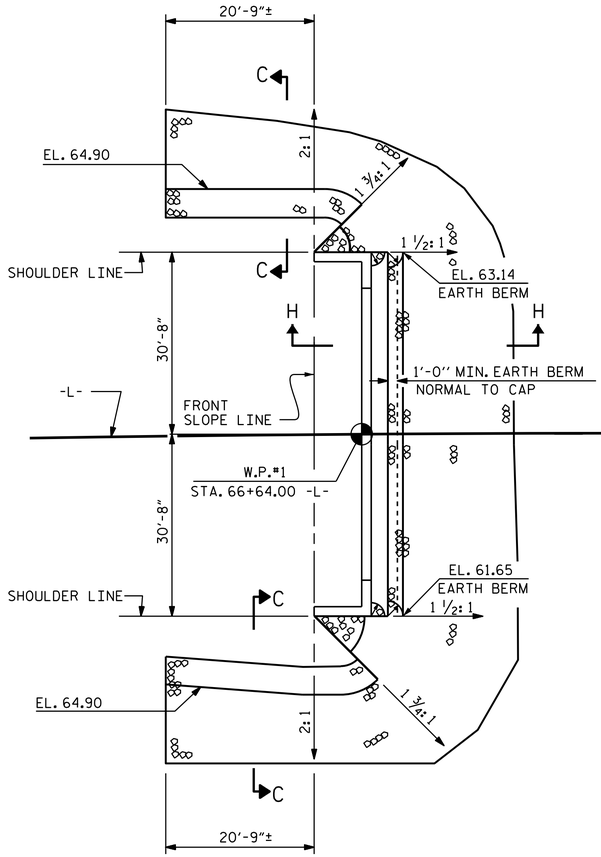

END BENT 1

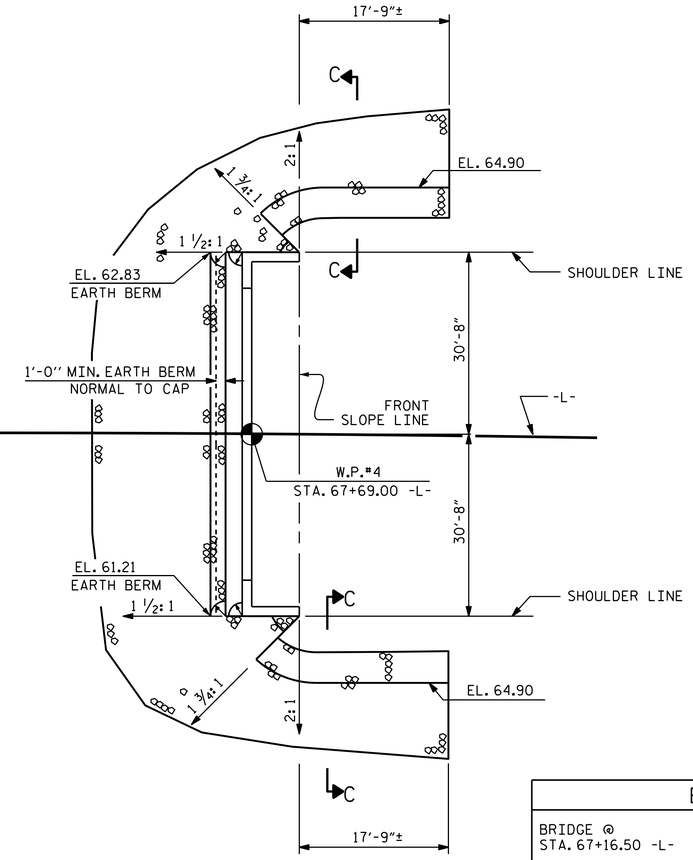

END BENT 2

NOTES :

FOR BERM WIDTH DIMENSIONS, SEE GENERAL DRAWING.

ESTIMATED QUANTITIES		
BRIDGE @ STA. 67+16.50 -L-	RIP RAP CLASS II (2'-0" THICK)	GEOTEXTILE FOR DRAINAGE
	TONS	SQUARE YARDS
END BENT 1	190	210
END BENT 2	185	205
TOTAL	375	415

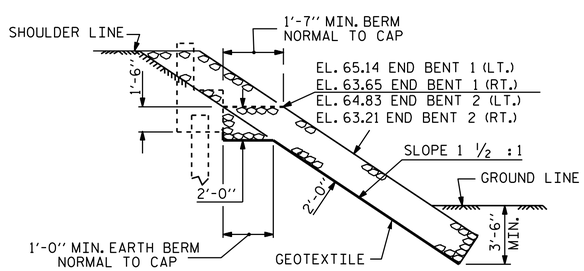

SECTION H-H

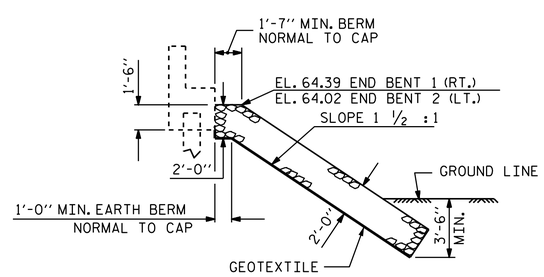

℄ SECTION

BERM RIP RAPPED

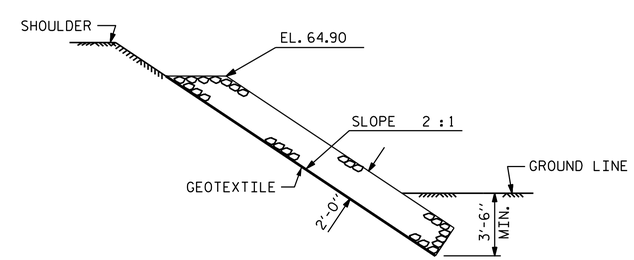

SECTION C-C

PROJECT NO. R-4903

BLADEN COUNTY

STATION: 67+16.50 -L-

STATE OF NORTH CAROLINA
DEPARTMENT OF TRANSPORTATION
RALEIGH

STANDARD

RIP RAP DETAILS

NORTH CAROLINA PROFESSIONAL SEAL 10730 ENGINEER D. ANDRE DAVENPORT, JR.

DocuSigned by: D. Andre Davenport, Jr. 8950C284F664495...

10/28/2014

REVISIONS						
NO.	BY:	DATE:	NO.	BY:	DATE:	
1			3			
2			4			

SHEET NO. S-30

TOTAL SHEETS 92

ASSEMBLED BY : D.A. DAVENPORT DATE : 02/29/12
CHECKED BY : K.D. LAYNE DATE : 01/02/13

DRAWN BY : REK 1/84
CHECKED BY : RDU 1/84

REV. 5/1/06R TLA/GM
REV. 10/1/11 MAA/GM
REV. 12/21/11 MAA/GM

DESIGN ENGINEER OF RECORD:
D.A. DAVENPORT DATE : 04/11/13

27-OCT-2014 09:23
R:\Structures\Plans\Str*1\R4903_SD_RR_01.dgn
dadavenport

STD. NO. RR1