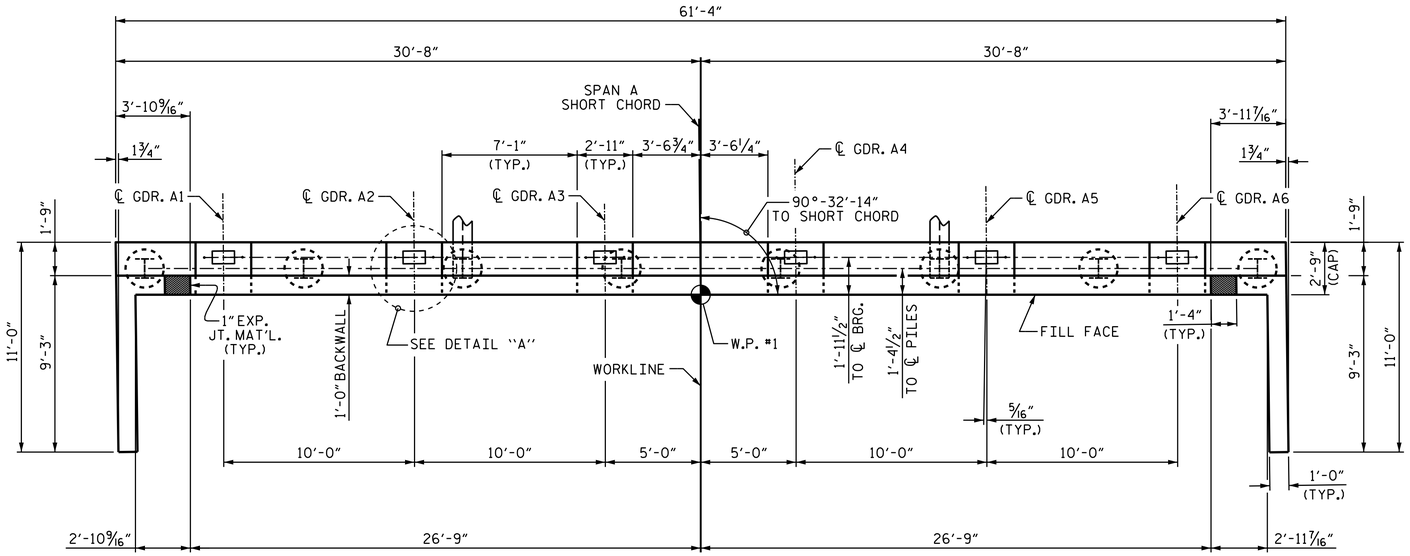

PLAN

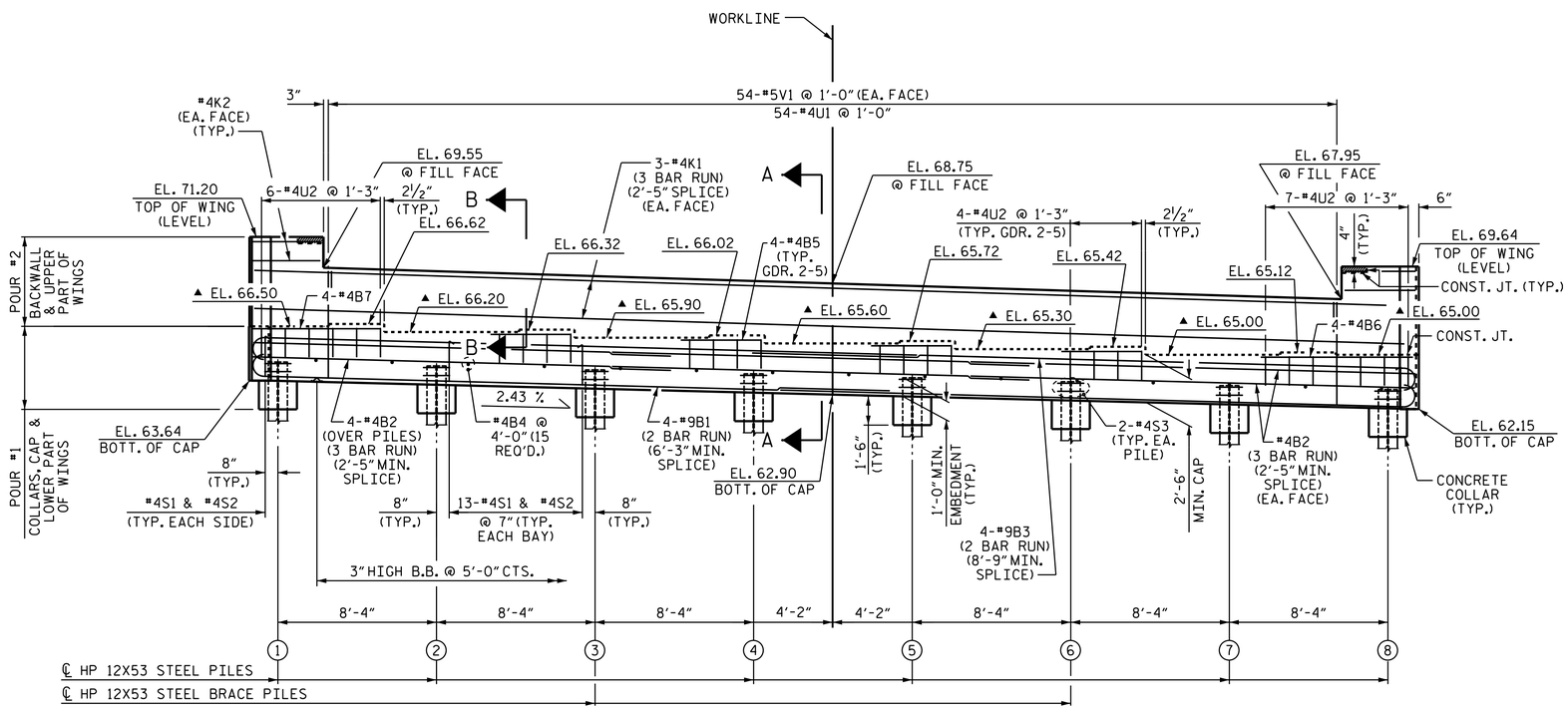

ELEVATION

NOTES

STIRRUPS IN CAP MAY BE SHIFTED AS NECESSARY TO CLEAR ANCHOR BOLTS.

BACKWALL SHALL BE PLACED BEFORE APPLYING THE EPOXY PROTECTIVE COATING.

THE TOP SURFACE AREAS OF THE END BENT CAPS SHALL BE CURED IN ACCORDANCE WITH THE STANDARD SPECIFICATIONS EXCEPT THE MEMBRANE CURING COMPOUND METHOD SHALL NOT BE USED.

THE TOP SURFACE OF THE CAP EXCEPT THE BRIDGE SEAT BUILDUPS SHALL BE SLOPED TRANSVERSELY FROM THE FILL FACE TO THE BACK FACE AT THE RATE OF 2%.

INSTALL THE 4"DIA. DRAIN PIPE THROUGH THE WING WALL AS REQUIRED FOR REINFORCED BRIDGE APPROACH FILLS, SEE THE ROADWAY PLANS. REINFORCING STEEL IN THE WING WALL MAY BE SHIFTED AS NECESSARY TO CLEAR THE DRAIN PIPE.

THE CONCRETE IN THE SHADED AREA OF THE WING SHALL BE POURED AFTER THE JOINT BETWEEN THE DECK AND THE APPROACH SLAB HAS BEEN SAWED AND THE BARRIER RAILS ARE CAST IF SLIP FORMING IS USED.

▲ FOR LOCATION OF ELEVATIONS BETWEEN BUILDUPS, SEE SECTION A-A ON SHEET 3 OF 3.

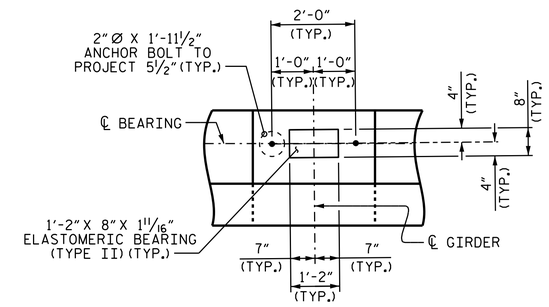

DETAIL "A"

TOP OF PILE ELEVATIONS	
1	64.62
2	64.41
3	64.21
4	64.01
5	63.81
6	63.60
7	63.40
8	63.20

PROJECT NO. R-4903

BLADEN COUNTY

STATION: 67+16.50 -L-

SHEET 1 OF 3

STATE OF NORTH CAROLINA
DEPARTMENT OF TRANSPORTATION
RALEIGH

SUBSTRUCTURE

END BENT 1

NORTH CAROLINA PROFESSIONAL SEAL 10730 ENGINEER D. ANDRE DAVENPORT, JR.

DocuSigned by: D. Andre Davenport, Jr. 805DC284F664495.
10/28/2014

REVISIONS						
NO.	BY:	DATE:	NO.	BY:	DATE:	
1			3			
2			4			

SHEET NO. S-20

TOTAL SHEETS 92

STR. #1

DRAWN BY : M.K. BEARD DATE : 6/12/12
CHECKED BY : G.W. DICKEY DATE : 6/26/12
DESIGN ENGINEER OF RECORD: R.L. CHESSON DATE : 04/11/13

27-OCT-2014 09:23
R:\Structures\Plans\Str#1\R4903_SD_E1_01.dgn
dadavenport