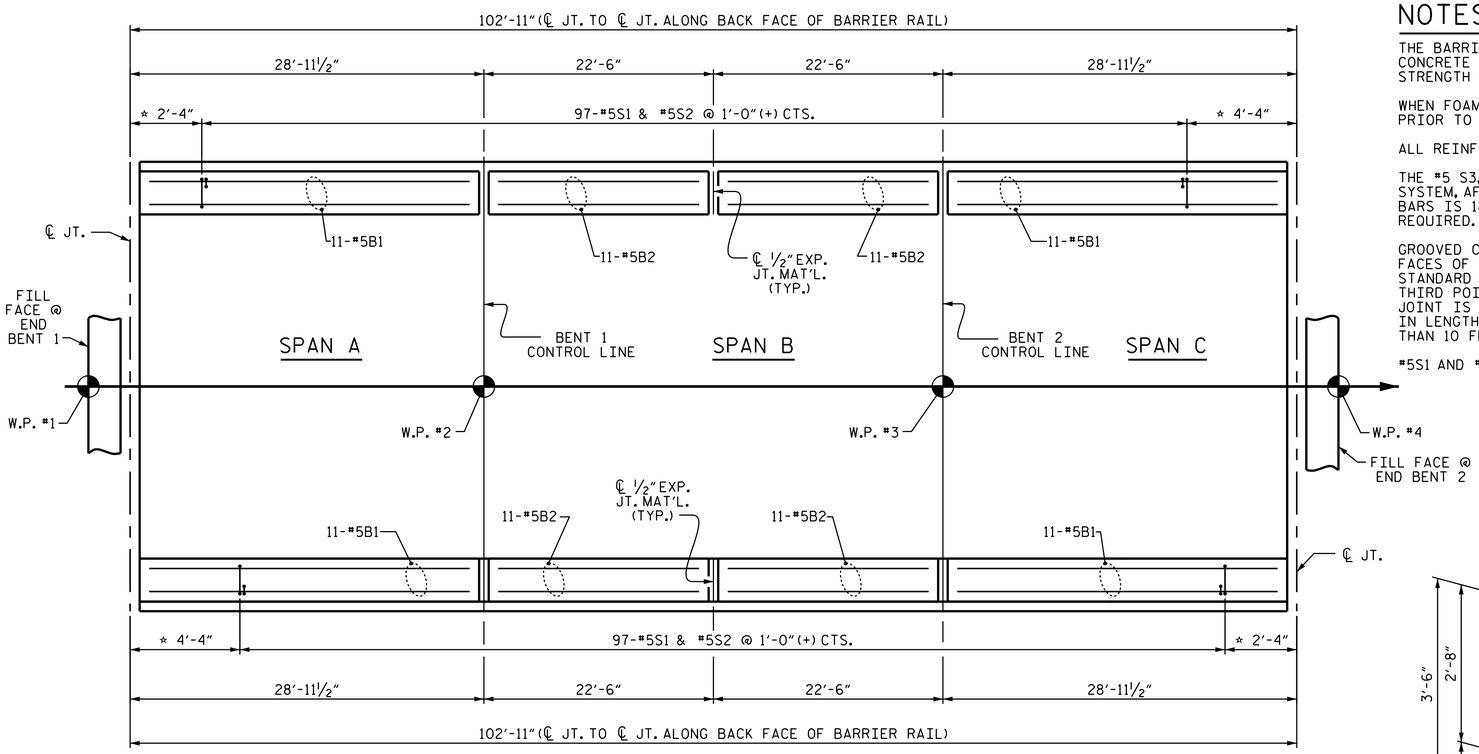

PLAN OF BARRIER RAIL

* SEE "END OF RAIL DETAILS" FOR ADDITIONAL REINFORCING STEEL

NOTES

THE BARRIER RAIL IN A CONTINUOUS UNIT SHALL NOT BE CAST UNTIL ALL SLAB CONCRETE IN THE UNIT HAS BEEN CAST AND HAS REACHED A MINIMUM COMPRESSIVE STRENGTH OF 3,000 PSI.

WHEN FOAM JOINT SEAL IS REQUIRED, THE JOINT IN THE DECK SHALL BE SAWED PRIOR TO THE CASTING OF BARRIER RAIL.

ALL REINFORCING STEEL IN BARRIER RAILS SHALL BE EPOXY COATED.

THE #5 S3, S4, S5 AND S6 BARS SHALL BE INSTALLED, USING AN ADHESIVE ANCHORING SYSTEM, AFTER SAWING THE JOINT. THE YIELD LOAD FOR THE #5 S3, S4, S5 AND S6 BARS IS 18.6 KIPS. FIELD TESTING FOR THE ADHESIVE BONDING SYSTEM IS NOT REQUIRED.

GROOVED CONTRACTION JOINTS, ½" IN DEPTH, SHALL BE TOOLED IN ALL EXPOSED FACES OF THE BARRIER RAIL AND IN ACCORDANCE WITH ARTICLE 825-10(B) OF THE STANDARD SPECIFICATIONS. THE CONTRACTION JOINT SHALL BE LOCATED AT EACH THIRD POINT BETWEEN BARRIER RAIL EXPANSION JOINTS. ONLY ONE CONTRACTION JOINT IS REQUIRED AT MIDPOINT OF BARRIER RAIL SEGMENTS LESS THAN 20 FEET IN LENGTH AND NO CONTRACTION JOINTS ARE REQUIRED FOR THOSE SEGMENTS LESS THAN 10 FEET IN LENGTH.

#5S1 AND #5S2 BARS MAY BE SHIFTED SLIGHTLY TO AVOID ½" EXPANSION JOINT.

BAR TYPES

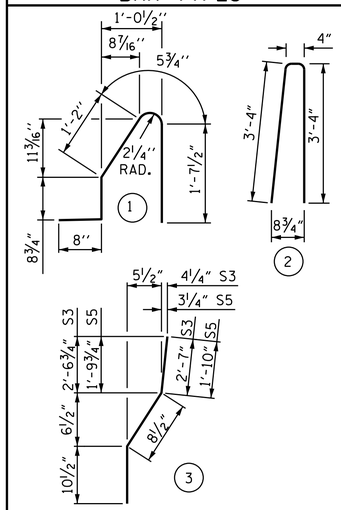

ALL BAR DIMENSIONS ARE OUT TO OUT

BILL OF MATERIAL

FOR CONCRETE BARRIER RAIL ONLY

BAR	NO.	SIZE	TYPE	LENGTH	WEIGHT
* B1	44	#5	STR	28'-6"	1308
* B2	44	#5	STR	22'-1"	1013
* S1	194	#5	1	4'-8"	944
* S2	194	#5	2	7'-0"	1416
* S3	4	#5	3	4'-2"	17
* S4	4	#5	STR	4'-0"	17
* S5	8	#5	3	3'-5"	29
* S6	8	#5	STR	3'-3"	27

* EPOXY COATED REINFORCING STEEL	4,771 LBS.
CLASS AA CONCRETE	28.0 CU. YDS.
CONCRETE BARRIER RAIL	205.83 LIN. FT.

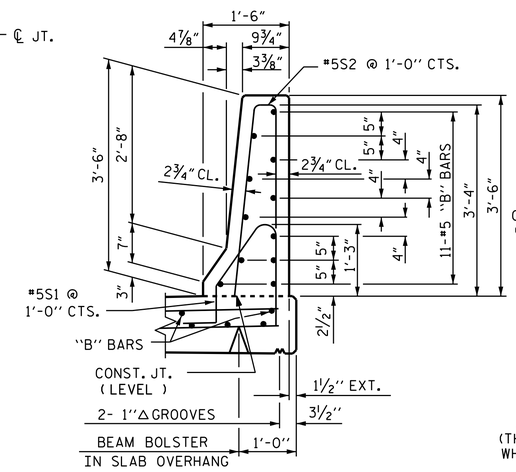

SECTION THRU RAIL

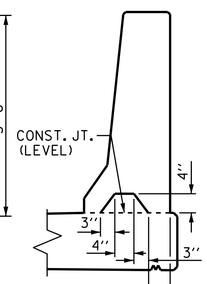

SECTION S-S

AT DAM IN OPEN JOINT (THIS IS TO BE USED ONLY WHEN SLIP FORM IS USED)

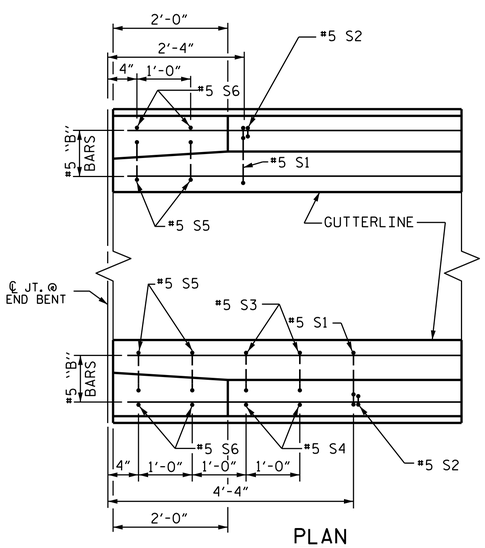

PLAN

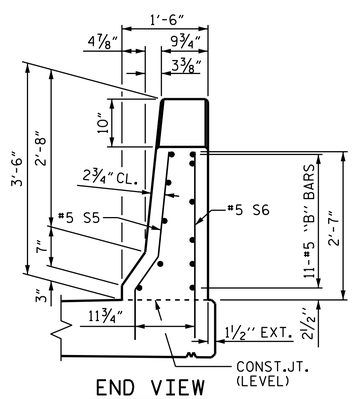

END VIEW

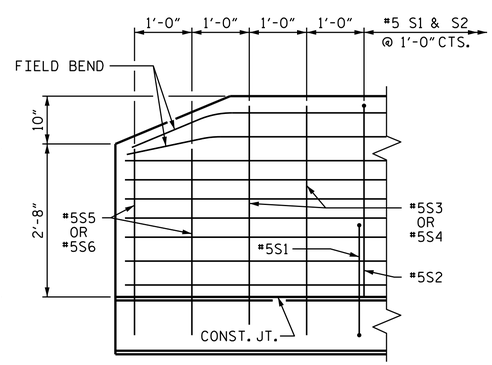

SIDE VIEW

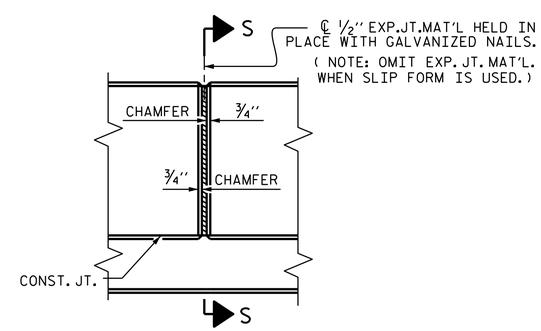

ELEVATION AT EXPANSION JOINTS

END OF RAIL DETAILS

FOR ADHESIVE ANCHORING AT SAWED JOINTS

BARRIER RAIL DETAILS

PROJECT NO. R-4903

BLADEN COUNTY

STATION: 67+16.50 -L-

STATE OF NORTH CAROLINA
DEPARTMENT OF TRANSPORTATION
RALEIGH

STANDARD

CONCRETE BARRIER RAIL

NORTH CAROLINA PROFESSIONAL SEAL 10730 ENGINEER D. ANDRE DAVENPORT, JR.

Docu... D. Andre Davenport, Jr.
B6DC2B4F6644495... 10/28/2014

REVISIONS							SHEET NO.
NO.	BY:	DATE:	NO.	BY:	DATE:		S-17
1			3				TOTAL SHEETS
2			4				92

STR. #1

STD. NO. CBR1

ASSEMBLED BY : J.P. ADAMS	DATE : 7/17/12
CHECKED BY : K.D. LAYNE	DATE : 8/15/12
DRAWN BY : ARB 5/87	REV. 10/1/11 MAA/GM
CHECKED BY : SJD 9/87	REV. 7/12 MAA/GM
	REV. 10/12 MAA/GM

27-OCT-2014 09:23
R:\Structures\Plans\Str*1\R4903_SD_BR_01.dgn
daddavenport