PROJECT REFERENCE NO.	SHEET NO.
R-4903	UC-3B

DESIGNED BY: BCH
DRAWN BY: BCH
CHECKED BY: JLT
APPROVED BY: MRB
REVISED:

NORTH CAROLINA DEPARTMENT OF TRANSPORTATION
UTILITIES ENGINEERING SEC.
PHONE:(919)707-6690
FAX:(919)250-4151

NORTH CAROLINA PROFESSIONAL SEAL 30499 ENGINEER ROBBIE C. HOUSER
Chad Houser 9/26/2014
UTILITY CONSTRUCTION PLANS ONLY

TGS ENGINEERS
TGS ENGINEERS
804-C N. LAFAYETTE ST
SHELBY, NC 28150
PH (704) 476-0003
CORP. LICENSE NO: C-0275

RESTRAINED JOINT DESIGN TABLE FOR DUCTILE IRON PIPE

FITTING	REQUIRED RESTRAINED LENGTH (FT) OF BARE D.I. PIPE BY DEPTH OF COVER							
HORIZONTAL BENDS	**3 FT**	**4 FT**	**5 FT**	**6 FT**	**7 FT**	**8 FT**	**9 FT**	**10 FT**
6 INCH DIA - 11.25 DEG	3	2	2	2	2	1	1	1
6 INCH DIA - 22.5 DEG	5	4	4	3	3	3	3	2
6 INCH DIA - 45 DEG	11	9	8	7	7	6	5	5
6 INCH DIA - 90 DEG	26	22	19	17	16	14	13	12
8 INCH DIA - 11.25 DEG	3	3	2	2	2	2	2	2
8 INCH DIA - 22.5 DEG	7	6	5	5	4	4	3	3
8 INCH DIA - 45 DEG	14	12	10	9	8	8	7	7
8 INCH DIA - 90 DEG	33	29	25	23	20	19	17	16
12 INCH DIA - 11.25 DEG	5	4	4	3	3	3	2	2
12 INCH DIA - 22.5 DEG	9	8	7	6	6	5	5	5
12 INCH DIA - 45 DEG	20	17	15	13	12	11	10	10
12 INCH DIA - 90 DEG	47	41	36	33	29	27	25	23
16 INCH DIA - 11.25 DEG	6	5	5	4	4	3	3	3
16 INCH DIA - 22.5 DEG	12	11	9	8	8	7	6	6
16 INCH DIA - 45 DEG	25	22	19	17	16	14	13	12
20 INCH DIA - 11.25 DEG	7	6	6	5	5	4	4	4
20 INCH DIA -22.5 DEG	15	13	11	10	9	9	8	7
20 INCH DIA - 45 DEG	31	27	24	21	19	18	16	15
20 INCH DIA - 90 DEG	74	65	57	52	47	43	40	37
VERTICAL BENDS - DOWN	**3 FT**	**4 FT**	**5 FT**	**6 FT**	**7 FT**	**8 FT**	**9 FT**	**10 FT**
6 INCH DIA - 11.25 DEG	7	6	6	5	4	4	4	3
6 INCH DIA - 22.5 DEG	15	13	11	10	9	8	8	7
6 INCH DIA - 45 DEG	31	27	23	21	19	17	16	15
8 INCH DIA - 11.25 DEG	10	8	7	6	6	5	5	5
8 INCH DIA - 22.5 DEG	19	17	15	13	12	11	10	9
8 INCH DIA - 45 DEG	40	35	30	27	25	22	21	19
12 INCH DIA - 11.25 DEG	14	12	10	9	8	8	7	7
12 INCH DIA - 22.5 DEG	28	24	21	19	17	16	14	13
12 INCH DIA - 45 DEG	57	50	44	39	35	32	30	28
16 INCH DIA - 11.25 DEG	18	15	14	12	11	10	9	9
16 INCH DIA - 22.5 DEG	36	31	27	25	22	20	19	17
16 INCH DIA - 45 DEG	74	65	57	51	46	42	39	36
20 INCH DIA - 11.25 DEG	22	19	17	15	14	12	11	11
20 INCH DIA -22.5 DEG	44	38	34	30	27	25	23	21
20 INCH DIA - 45 DEG	91	79	70	63	57	52	48	44
VERTICAL BENDS - UP	**3 FT**	**4 FT**	**5 FT**	**6 FT**	**7 FT**	**8 FT**	**9 FT**	**10 FT**
6 INCH DIA - 11.25 DEG	3	2	2	2	2	1	1	1
6 INCH DIA - 22.5 DEG	5	4	4	3	3	3	3	2
6 INCH DIA - 45 DEG	11	9	8	7	7	6	5	5
8 INCH DIA - 11.25 DEG	3	3	2	2	2	2	2	2
8 INCH DIA - 22.5 DEG	7	6	5	5	4	4	3	3
8 INCH DIA - 45 DEG	14	12	10	9	8	8	7	7
12 INCH DIA - 11.25 DEG	5	4	4	3	3	3	2	2
12 INCH DIA - 22.5 DEG	9	8	7	6	6	5	5	5
12 INCH DIA - 45 DEG	20	17	15	13	12	11	10	10
16 INCH DIA - 11.25 DEG	6	5	5	4	4	3	3	3
16 INCH DIA - 22.5 DEG	12	11	9	8	8	7	6	6
16 INCH DIA - 45 DEG	25	22	19	17	16	14	13	12
20 INCH DIA - 11.25 DEG	7	6	6	5	5	4	4	4
20 INCH DIA -22.5 DEG	15	13	11	10	9	9	8	7
20 INCH DIA - 45 DEG	31	27	24	21	19	18	16	15
DEAD ENDS / VALVES	**3 FT**	**4 FT**	**5 FT**	**6 FT**	**7 FT**	**8 FT**	**9 FT**	**10 FT**
6 INCH DIA	50	45	41	38	35	33	31	29
8 INCH DIA	65	59	54	50	46	43	40	38
10 INCH DIA	80	72	66	61	56	52	49	46
12 INCH DIA	94	85	78	72	66	62	58	54
16 INCH DIA	123	111	102	94	87	81	76	71
20 INCH DIA	151	137	125	115	107	100	93	88
REDUCERS	**3 FT**	**4 FT**	**5 FT**	**6 FT**	**7 FT**	**8 FT**	**9 FT**	**10 FT**
12 INCH X 8 INCH	50	45	41	38	35	33	31	29
TEES	**3 FT**	**4 FT**	**5 FT**	**6 FT**	**7 FT**	**8 FT**	**9 FT**	**10 FT**
8" RUN X 8" BRANCH : RL = 1 FT	64	58	53	48	44	41	38	36
8" RUN X 8" BRANCH : RL = 5 FT	59	52	47	42	39	35	32	30
12" RUN X 12" BRANCH : RL = 1 FT	93	84	77	70	65	60	56	53
12" RUN X 12" BRANCH : RL = 5 FT	88	79	71	65	59	54	50	47

ASSUMPTIONS

LAYING CONDITION = TYPE 4
SOIL DESIGNATION = COHESIVE-GRANULAR
DESIGN PRESSURE = 200 PSI (TEST PRESSURE)
SAFETY FACTOR = 1.5

NOTES

1. RESTRAINED LENGTH IS MEASURED AS FOLLOWS:
   A. HORIZONTAL/VERTICAL BENDS: ALONG EACH SIDE OF BEND.
   B. HORIZONTAL/VERTICAL BENDS - OFFSET: ALONG THE OUTER SIDE OF EACH BEND. ALL PIPE BETWEEN THE TWO BENDS SHALL BE RESTRAINED JOINT.
2. WHEN IT IS NOT POSSIBLE TO INSTALL THE RESTRAINED LENGTHS AS NOTED BY THIS TABLE, CONTRACTOR SHALL INSTALL THE APPROPRIATE CONCRETE THRUST RESTRAINTS AS PER THE DETAILS HEREIN.

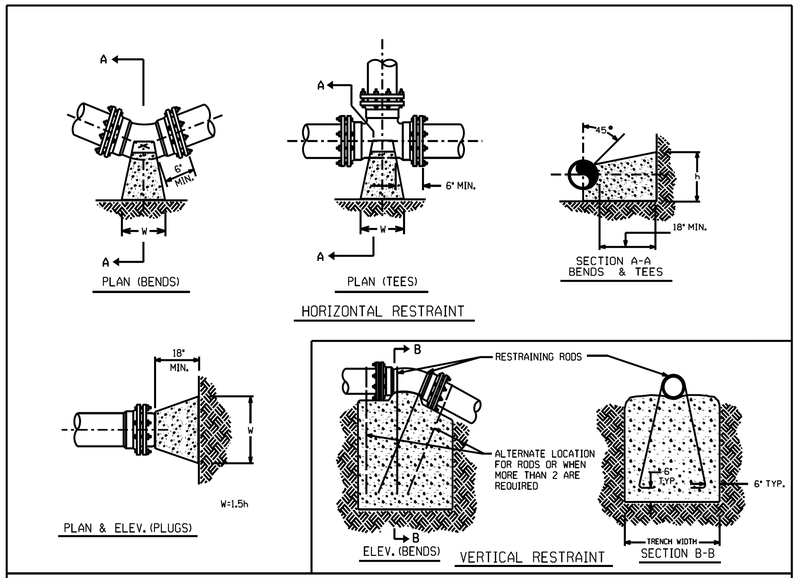

THRUST RESTRAINT FOR PIPE LINES

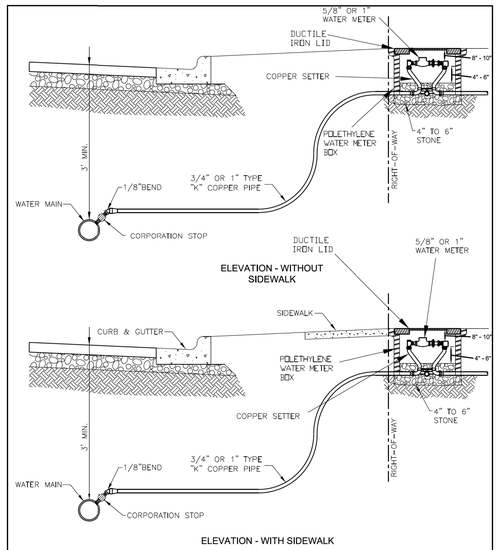

3/4" OR 1" WATER CONNECTION FOR 5/8" OR 1" WATER METERS

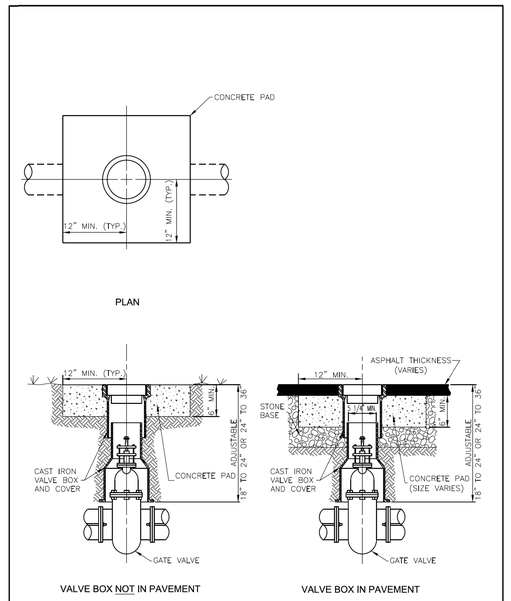

WATER VALVE BOX INSTALLATION FOR 4", 6", 8", AND 12" GATE VALVES

UTILITY DETAILS

5/14/99
9/2/2014
11:10:54 AM
s\R-4903\Utilities\R4903_ut_notes_UC03 & details_UC03a-03e)_psh.dgn