PROJECT REFERENCE NO.	SHEET NO.
R-4903	UC-3C
DESIGNED BY: BCH	
DRAWN BY: BCH	
CHECKED BY: JLT	
APPROVED BY: MRB	
REVISED:	
NORTH CAROLINA DEPARTMENT OF TRANSPORTATION	
UTILITIES ENGINEERING SEC. PHONE:(919)707-6690 FAX:(919)250-4151	UTILITY CONSTRUCTION PLANS ONLY

NORTH CAROLINA PROFESSIONAL SEAL 30499 ENGINEER BOBBY C. HOUSER 9/26/2014

Chad Houser

TGS ENGINEERS
804-C N. LAFAYETTE ST
SHELBY, NC 28150
PH (704) 476-0003
CORP. LICENSE NO: C-0275

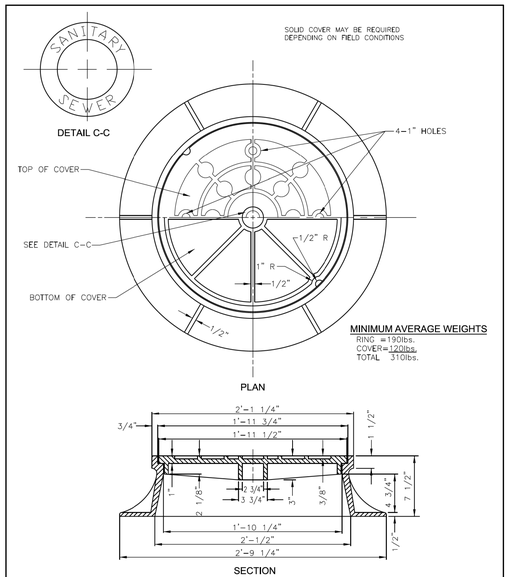

PROVIDE MANHOLE INSERTS MANUFACTURED FROM HIGH DENSITY POLYETHYLENE, MEETING THE REQUIREMENTS OF ASTM D-1248, CLASS A, CATEGORY 5, TYPE III. INSERTS SHALL BE EQUIPPED WITH 1 GAS RELIEF VALVE, 1 VACUUM RELIEF VALVE, A CROSS-LINKED POLYETHYLENE GASKET AND ONE HEAVY WEIGHT POLYPROPYLENE LIFTING STRAP.

SANITARY SEWER MANHOLE RING AND COVER

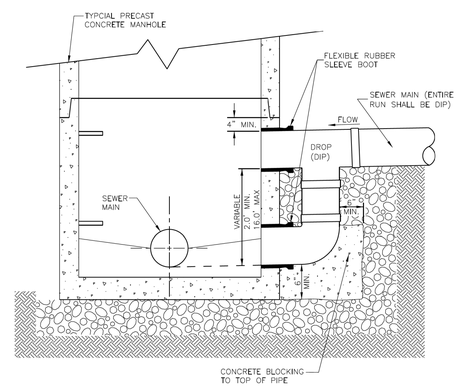

SANITARY SEWER DROP MANHOLE

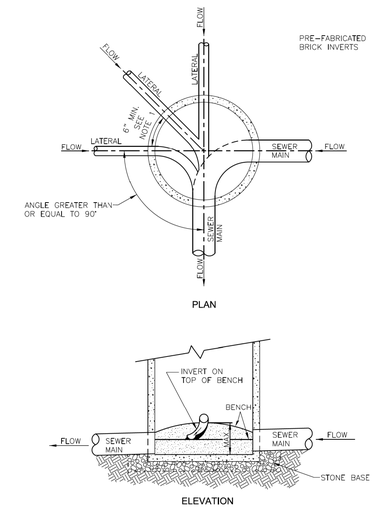

NOTES:

1. THE MINIMUM SPACING FROM THE EDGE OF A CORE FOR A LATERAL TO THE EDGE OF THE NEXT CORE SHALL BE 6 INCHES.
2. SEWER LATERAL SHALL NOT ENTER A MANHOLE AT AN ANGLE LESS THAN 90° TO THE EFFLUENT PIPE.
3. ALL LATERALS TO BE INSTALLED AT THE TOP OF THE BENCH.
4. PROVIDE BRICK OR CONCRETE FOR INVERT.
5. INVERTS TO BE BUILT FROM LATERAL TO EFFLUENT PIPE.
6. THE MAXIMUM NUMBER OF LATERALS FOR ANY ONE MANHOLE IS FIVE (5).
7. ALL NEW LATERALS INTO MANHOLES MUST BE CORE DRILLED AND INSTALLED WITH A FLEXIBLE RUBBER BOOT.

SANITARY SEWER LATERAL AT MANHOLE

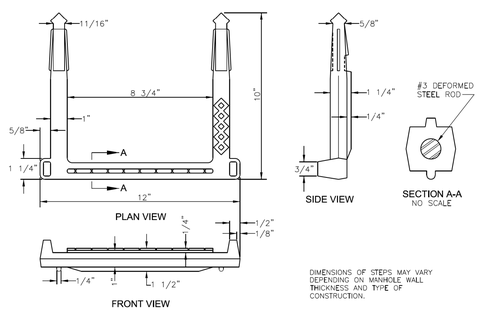

PLASTIC COATED MANHOLE STEPS

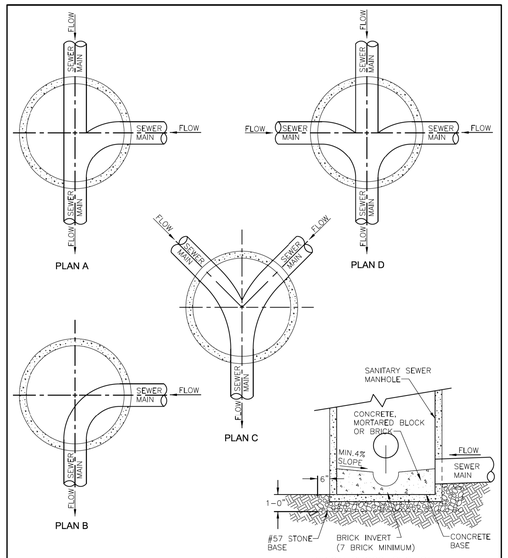

NOTES:

1. INVERT MATERIAL SHALL BE CONCRETE CAST IN PLACE WITH A SMOOTH FINISH.
2. WIDTH OF INVERT SHALL MATCH INSIDE DIAMETER OF INCOMING AND OUTGOING PIPES.
3. BRICK INVERT SHALL BE FORMED AS SHOWN.
4. ALL INVERT ELEVATIONS SHALL BE AS SHOWN ON APPROVED CONSTRUCTION PLANS.
5. BENCHES TO BE BUILT OUT OF CONCRETE, MORTARED BLOCK OR BRICK. STONE IS NOT ACCEPTABLE.

SANITARY SEWER MANHOLE INVERT

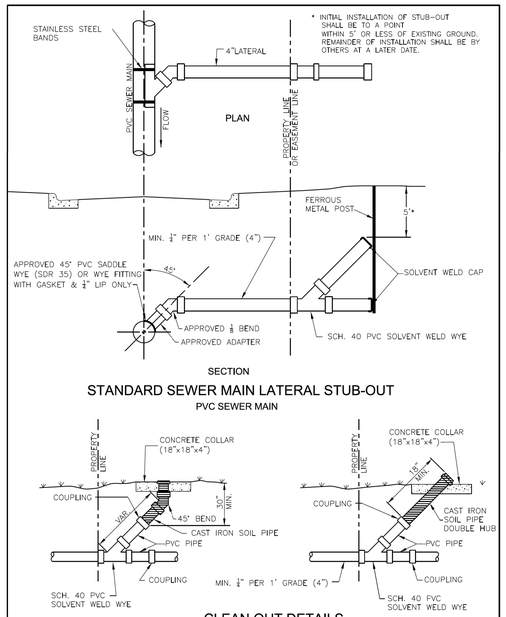

SANITARY SEWER 4" LATERAL

UTILITY DETAILS

5/14/99

9/27/2014
11:39:54 AM
R4903_ut_notes_UC03 & details_UC03a-03e)_psh.dgn