PROJECT REFERENCE NO.	SHEET NO.
R-4903	UC-3D

DESIGNED BY: BCH
DRAWN BY: BCH
CHECKED BY: JLT
APPROVED BY: MRB
REVISED:

NORTH CAROLINA DEPARTMENT OF TRANSPORTATION

UTILITIES ENGINEERING SEC.
PHONE:(919)707-6690
FAX:(919)250-4151

NORTH CAROLINA PROFESSIONAL SEAL 30499 ENGINEER BOBBY C. MOUSER 9/26/2014

UTILITY CONSTRUCTION PLANS ONLY

TGS ENGINEERS
804-C N. LAFAYETTE ST
SHELBY, NC 28150
PH (704) 476-0003
CORP. LICENSE NO: C-0275

NOTE: A MINIMUM HEIGHT OF 6'-0" FROM BOTTOM OF D. I. PIPE TO BOTTOM OF EXISTING STREAM SHALL BE MAINTAINED BETWEEN THE LONG-SPAN PIPE PIERS.

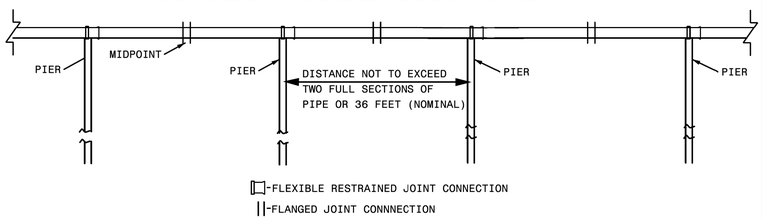

FLEXIBLE RESTRAINED JOINT & FLANGED LONG-SPAN PIPE DETAIL

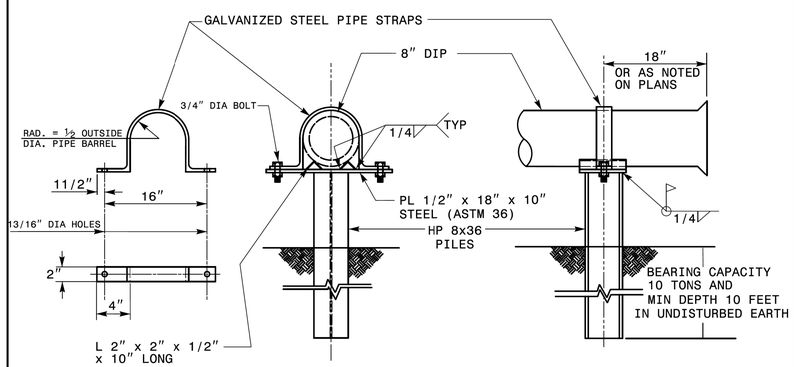

STEEL H-PILE PIERS

NOT TO SCALE

NOTES

1. MANHOLE MEETS ALL REQ. OF ASTM C478.
2. CONCRETE IS MINIMUM 4000 PSI COMPRESSIVE STRENGTH.
3. MATERIAL USED TO SEAL AROUND PIPE SHALL BE NON-SHRINK GROUT.
4. MANHOLE SHALL BE CONSTRUCTED OF PRECAST CONCRETE. FIBERGLASS MANHOLE IS NOT ACCEPTABLE.
5. A DROP STRUCTURE SHALL BE PLACED WHERE PIPE VERTICAL SEPARATION BETWEEN INVERTS EXCEEDS 2.50'. USE 5' DIAMETER MANHOLES WHEN DROP STRUCTURES ARE NEEDED.
6. WITH THE EXCEPTION OF THE MANHOLE BASE SECTION, ALL OTHER MATERIALS, INSTALLATION AND WORKMANSHIP SHALL BE IN ACCORDANCE WITH THE FAYPWC STANDARD MANHOLE DETAILS.
7. DOGHOUSE MANHOLE SHALL BE FREE OF LEAKS AND HAVE NO SIGNS OF VISIBLE LEAKAGE.
8. MANHOLES GREATER THAN 12' IN DEPTH SHALL HAVE MIN. 6" EXTENDED BASE.
9. SEE STANDARD MANHOLE DETAIL FOR ADDITIONAL REQUIREMENTS.

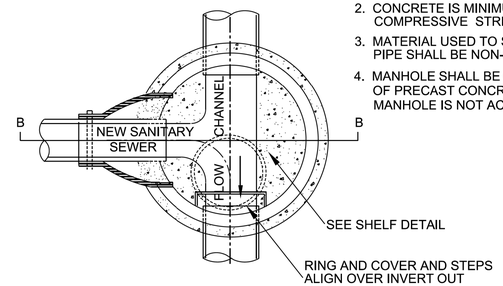

SECTION A-A

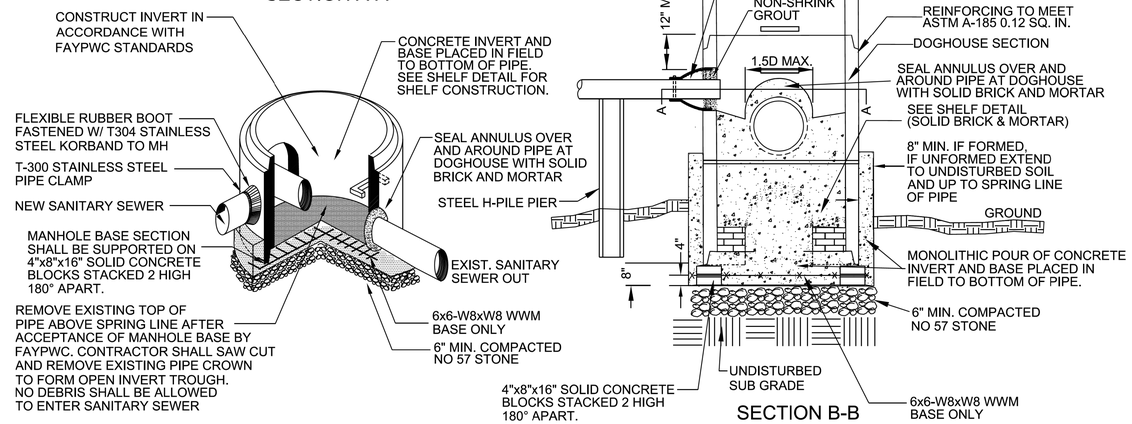

SECTION B-B

ABOVE GROUND DOGHOUSE MANHOLE
(FOR USE IN CONJUNCTION WITH PIERS)

UTILITY DETAILS

5/14/99

9/2/2014
11:20:29 AM
s\R-4903\Utilities\R4903_ut_notes_UC03 & details_UC03a-03e1_psh.dgn