$$$$$$$SYSTIME$$$$$
$$$$$$$$$$$$$$$$$$DGN$$$$$$$$$$$$$$$$$
$$$$USERNAME$$$$

STATE OF NORTH CAROLINA
DEPT. OF TRANSPORTATION
DIVISION OF HIGHWAYS
RALEIGH, N.C.

ENGLISH DETAIL DRAWING FOR
CONCRETE GRATED DROP INLET TYPE 'A'
MINIMUM DEPTH
12" THRU 72" PIPE

SHEET 1 OF 2
840d17

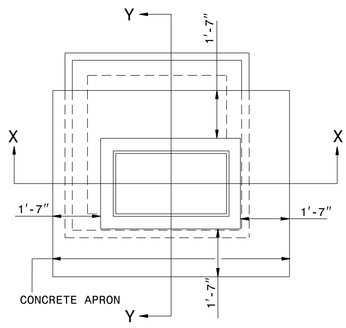

PLAN

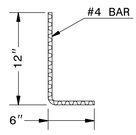

DOWEL-A

GENERAL NOTES:

USE CLASS "B" CONCRETE THROUGHOUT.

PROVIDE ALL GRATED DROP INLETS OVER 3'-6" IN DEPTH WITH STEPS 12" ON CENTER. USE STEPS WHICH COMPLY WITH STD. DRAWING 840.66.

OPTIONAL CONSTRUCTION - MONOLITHIC POUR, 2" KEYWAY, OR #4 BAR DOWELS AT 12" CENTERS AS DIRECTED BY THE ENGINEER.

USE FORMS FOR THE CONSTRUCTION OF THE BOTTOM SLAB.

IF REINFORCED CONCRETE PIPE IS SET IN BOTTOM SLAB OF BOX, ADD TO SLAB AS SHOWN ON STD. NO. 840.00.

CONSTRUCT WITH PIPE CROWNS MATCHING.

USE STANDARD FRAMES AND GRATES 840.22 (SHOWN), 840.24(SHOWN), 840.20 (NOT SHOWN) OR 840.29 (NOT SHOWN).

SEE STANDARD DRAWING 840.25 FOR ATTACHMENT OF FRAMES AND GRATES.

CHAMFER ALL EXPOSED CORNERS 1".

DRAWING NOT TO SCALE.

MAX. DEPTH OF THIS STRUCTURE FROM TOP OF BOTTOM SLAB TO TOP ELEVATION IS 12 FEET.

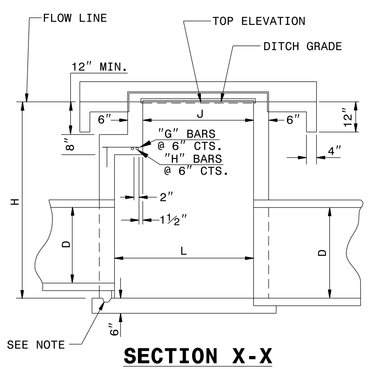

SECTION X-X

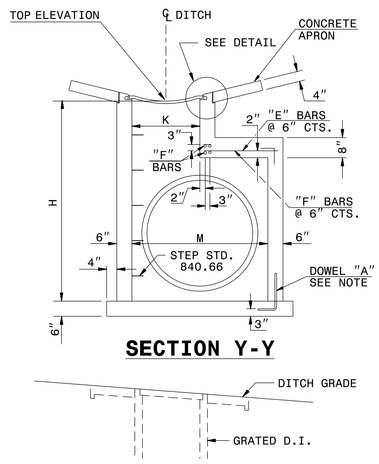

SECTION Y-Y

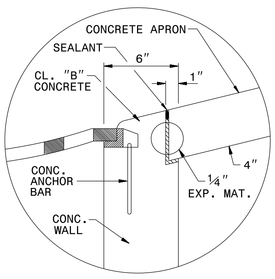

DETAIL

(APRON SUPPORT NOTCH)

STATE OF NORTH CAROLINA
DEPT. OF TRANSPORTATION
DIVISION OF HIGHWAYS
RALEIGH, N.C.

ENGLISH DETAIL DRAWING FOR
CONCRETE GRATED DROP INLET TYPE 'A'
MINIMUM DEPTH
12" THRU 72" PIPE

SHEET 1 OF 2
840d17

STATE OF NORTH CAROLINA
DEPT. OF TRANSPORTATION
DIVISION OF HIGHWAYS
RALEIGH, N.C.

ENGLISH DETAIL DRAWING FOR
CONCRETE GRATED DROP INLET TYPE 'A'
MINIMUM DEPTH
12" THRU 72" PIPE

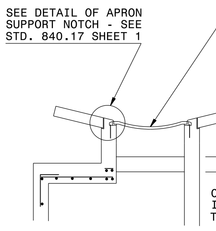

PART SECTION V-V

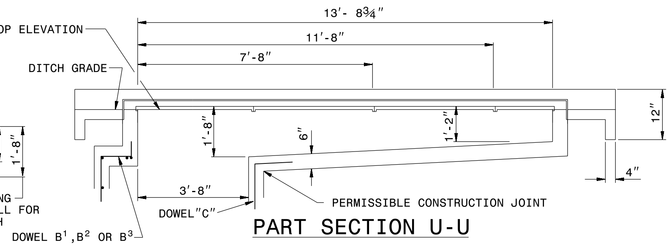

PART SECTION U-U

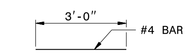

DOWEL-B¹

FOR 15" THRU 36" INLET

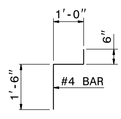

DOWEL-B²

FOR 42" INLET

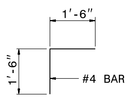

DOWEL-B³

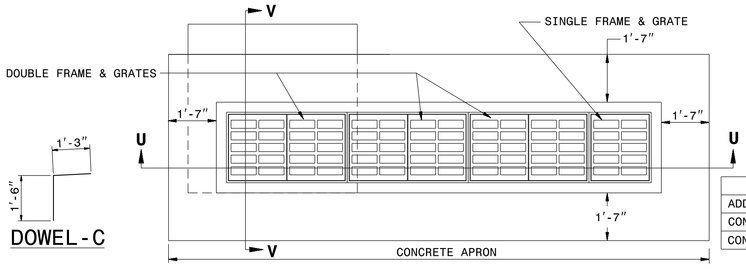

DOWEL-C

QUANTITY TO BE ADDED FOR EACH 2' INCREMENT INLET OPENING						
ADDITIONAL INLETS	2'-0"	4'-0"	6'-0"	8'-0"	10'-0"	12'-0"
CONCRETE CU. YDS.	0.191	0.417	0.665	0.897	1.145	1.380
CONCRETE APRON CU. YDS.	0.074	0.148	0.222	0.296	0.370	0.444

MIN. DIMENSIONS AND QUANTITIES FOR CONCRETE GRATED DROP INLET(BASED ON MIN. HEIGHT, H)

DIMENSIONS OF BOX AND PIPE						REINFORCING STEEL - NO. 4 BARS									CU YDS CONC. IN BOX					DEDUCTIONS FOR ONE PIPE	
PIPE	SPAN	WIDTH	SPAN	WIDTH	HEIGHT	BARS E		BARS F		BARS G		BARS H		TOTAL	BOTTOM	H	H PER	APRON	TOTAL		
D	J	K	L	M	H	NO.	LENGTH	NO.	LENGTH	NO.	LENGTH	NO.	LENGTH	LBS.	SLAB	TOTAL	FT HT			C.S.	R.C.
12"	3'-8"	2'-0"	3'-8"	2'-0"	3'-0"	—	—	—	—	—	—	—	—	—	0.362	0.926	0.247	0.395	1.683	0.015	0.024
15"	3'-8"	2'-0"	3'-8"	2'-0"	3'-3"	—	—	—	—	—	—	—	—	—	0.362	0.988	0.247	0.395	1.745	0.023	0.036
18"				2'-0"	3'-4"	—	—	—	—	—	—	—	—	—	0.362	1.050	0.247		1.807	0.033	0.049
24"				2'-10"	4'-0"	8	1'-5"	6	4'-9"	—	—	—	—	27	0.444	1.362	0.278		2.201	0.059	0.085
30"			3'-8"	3'-5"	4'-6"	8	2'-0"	7	4'-9"	—	—	—	—	33	0.502	1.644	0.288		2.541	0.092	0.127
36"			4'-0"	4'-0"	5'-0"	8	2'-5"	8	4'-11"	4	0'-9"	2	4'-11"	47	0.560	1.931	0.321		2.920	0.132	0.178
42"			4'-10"	4'-10"	5'-7"	10	3'-1"	9	5'-7"		1'-5"	3	5'-7"	67	0.704	2.500	0.370		3.677	0.180	0.243
48"			5'-4"	5'-4"	6'-2"	11	3'-7"	10	6'-1"		1'-11"	4	6'-1"	87	0.823	3.013	0.407		4.315	0.235	0.317
54"			6'-0"	6'-0"	6'-9"	12	4'-1"	11	6'-7"		2'-5"	5	6'-7"	107	0.951	3.589	0.444		5.072	0.297	0.401
60"			6'-6"	6'-6"	7'-5"	13	4'-9"	12	7'-3"		3'-1"	6	7'-3"	135	1.311	4.539	0.494		6.170	0.367	0.495
66"			7'-2"	7'-2"	7'-10"	14	5'-4"	14	7'-10"		3'-7"	7	7'-10"	168	1.136	5.061	0.537		6.901	0.444	0.599
72"	3'-8"	2'-0"	7'-8"	7'-8"	8'-4"	15	5'-11"	15	8'-5"	4	4'-3"	8	8'-5"	199	1.500	5.860	0.580	0.395	7.868	0.528	0.713

STATE OF NORTH CAROLINA
DEPT. OF TRANSPORTATION
DIVISION OF HIGHWAYS
RALEIGH, N.C.

ENGLISH DETAIL DRAWING FOR
CONCRETE GRATED DROP INLET TYPE 'A'
MINIMUM DEPTH
12" THRU 72" PIPE

SHEET 2 OF 2
840d17

SEE TITLE BLOCK

CONTRACT STANDARDS AND DEVELOPMENT UNIT
Office 919-707-6950 FAX 919-250-4119

ORIGINAL BY: J. Howerton DATE: 1/22/14
MODIFIED BY: DATE:
CHECKED BY: DATE:
FILE SPEC.: jhowerton\minimum depth type A.dgn

Digitally signed by Jon Howerton
DN: cn=Jon Howerton, c=US, o=NCDOT, ou=Roadway Standards, email=jhowerton@ncdot.gov
Date: 2014.10.03 08:50:00 -04'00'

NORTH CAROLINA PROFESSIONAL SEAL 022966 ENGINEER JON S. HOWERTON

PROJECT REFERENCE NO. R-4903
SHEET NO. 2C-4