PROJECT REFERENCE NO.	SHEET NO.
R-4903	2A-3
ROADWAY DESIGN ENGINEER	PAVEMENT DESIGN ENGINEER

NORTH CAROLINA PROFESSIONAL SEAL 027373 ENGINEER SUSAN C. LANCASTER — DocuSigned Susan C. Lancaster 10/7/2014

NORTH CAROLINA PROFESSIONAL SEAL 022896 ENGINEER CLARK S. MORRISON — DocuSigned Clark S. Morrison 10/7/2014

6/2/99

PAVEMENT SCHEDULE
FINAL PAVEMENT DESIGN

C1	1.5" S9.5B
C2	3" S9.5B
C3	VAR. S9.5B
C4	1.5" S9.5C
C5	3" S9.5C
C6	VAR. S9.5C
C7	2.5" SF9.5A
C8	VAR. SF9.5A
D1	2.5" I19.0B
D2	4" I19.0B
D3	VAR. I19.0B
D4	4" I19.0C
D5	VAR. I19.0C
E1	4" B25.0B
E2	4.5" B25.0B
E3	5.5" B25.0B
E4	VAR. B25.0B
E5	4.5" B25.0C
E6	VAR. B25.0C
J1	10" ABC
J2	VAR. ABC
P	PRIME COAT
R1	2'-6" C & G
R2	EXP. GUTTER
R3	1'-6" C & G
R4	5" CONC. ISLD.
T	EARTH MATERIAL
U	EXIST. PAVEMENT
W	WEDGING

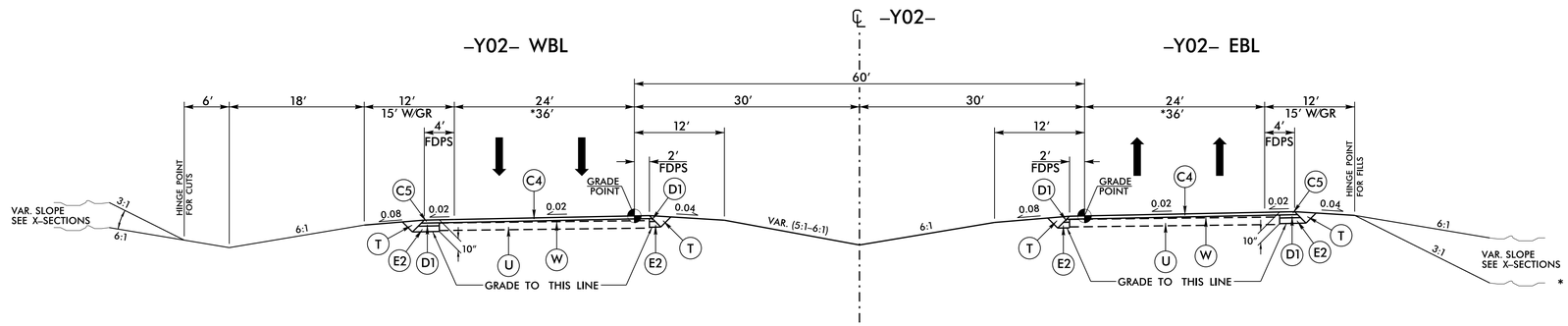

TYPICAL SECTION NO. 9

USE TYPICAL SECTION NO. 9

-Y02- EBL STA. 259+00.00 TO STA. 278+64.68 (BRIDGE)
-Y02- EBL STA. 280+21.76 (BRIDGE) TO STA. 290+45.00
-Y02- WBL STA. 268+50.00 TO STA. 278+69.91 (BRIDGE)
-Y02- WBL STA. 280+27.83 (BRIDGE) TO STA. 304+00.00

* USE 36' TOTAL TRAVEL LANE AT THESE STATIONS:
-Y02- EBL STA. 277+44.80 TO STA. 278+64.68 (BRIDGE)
-Y02- EBL STA. 280+21.76 (BRIDGE) TO STA. 287+45.00
-Y02- WBL STA. 271+50.00 TO 278+69.91 (BRIDGE)
-Y02- WBL STA. 280+27.83 (BRIDGE) TO STA. 281+53.97

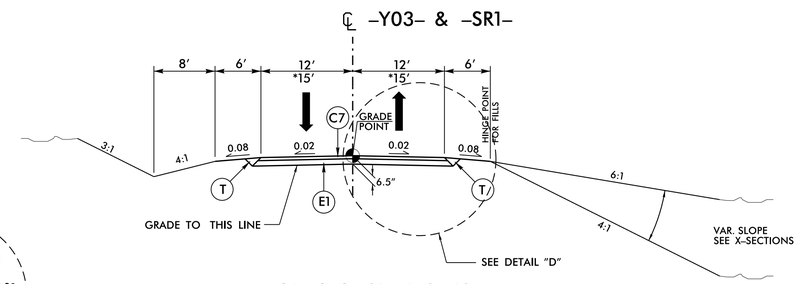

TYPICAL SECTION NO. 10

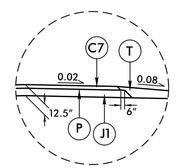

DETAIL "D"
ALTERNATE PAVEMENT DESIGN

USE TYPICAL SECTION NO. 10

-Y03- STA. 10+12.00 TO STA. 13+76.83
-Y03- STA. 23+00.00 TO STA. 26+71.44
* -SR1- STA. 22+45.00 TO STA. 23+60.94

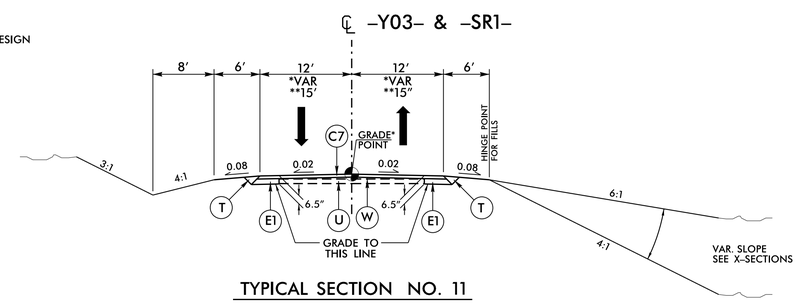

TYPICAL SECTION NO. 11

USE TYPICAL SECTION NO. 11

-Y03- STA. 20+50.00 TO STA. 23+00.00
* -SR1- STA. 11+05.00 TO STA. 11+92.87
** -SR1- STA. 20+90.00 TO STA. 22+45.00

* NO GRADE FOR -Y03- STA. 20+50.00 TO 21+57.30
OVERLAY EXISTING PAVEMENT ONLY
* NO GRADE FOR -SR1- CUL-DE-SAC
WIDEN AND OVERLAY EXISTING PAVEMENT

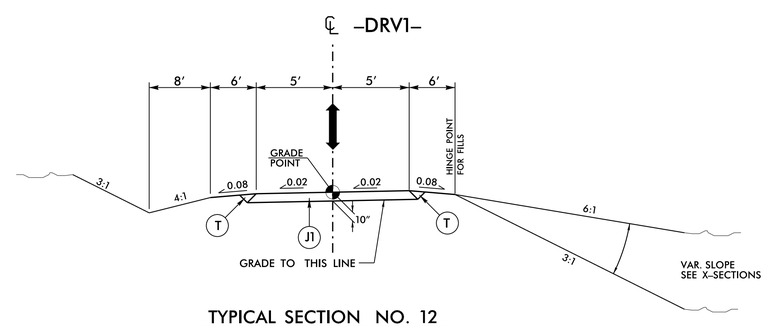

TYPICAL SECTION NO. 12

USE TYPICAL SECTION NO. 12

-DRV1- STA. 10+18.00 TO STA. 11+75.00

30-SEP-2014 14:47
R:\Roadway\Proj\R4903_Rdy_typ.dgn
$$USERNAME$$