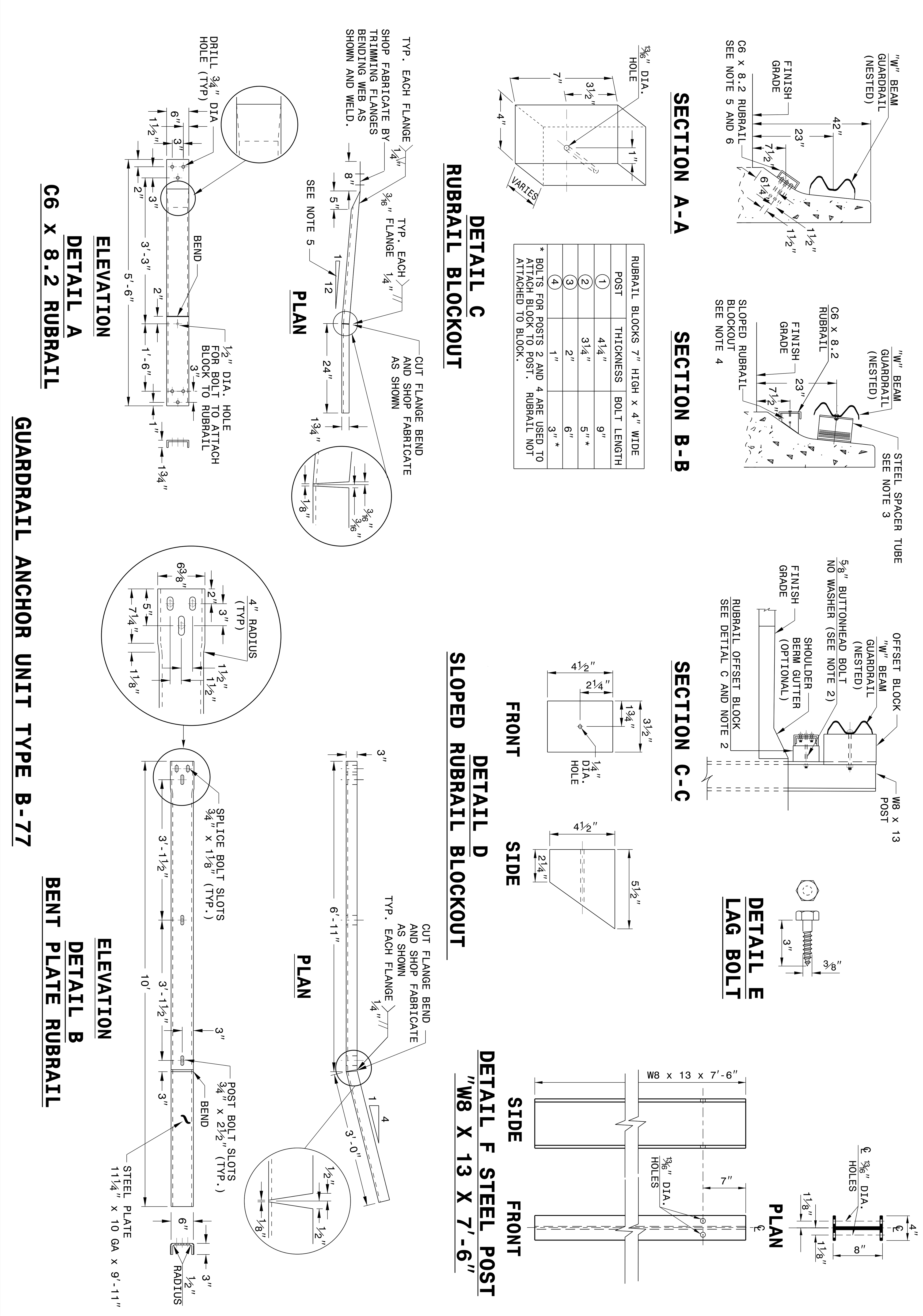

RUBRAIL BLOCKS 7" HIGH x 4" WIDE		
POST	THICKNESS	BOLT LENGTH
1	4¼"	9"
2	3¼"	5" *
3	2"	6"
4	1"	3" *

* BOLTS FOR POSTS 2 AND 4 ARE USED TO ATTACH BLOCK TO POST. RUBRAIL NOT ATTACHED TO BLOCK.

ENGLISH DETAIL DRAWING FOR
STRUCTURE ANCHOR UNIT
GUARDRAIL ANCHOR UNIT TYPE B-77
FOR F-SHAPE BARRIER

STATE OF NORTH CAROLINA
DEPT. OF TRANSPORTATION
DIVISION OF HIGHWAYS
RALEIGH, N.C.

SHEET 5 OF 7
862D03

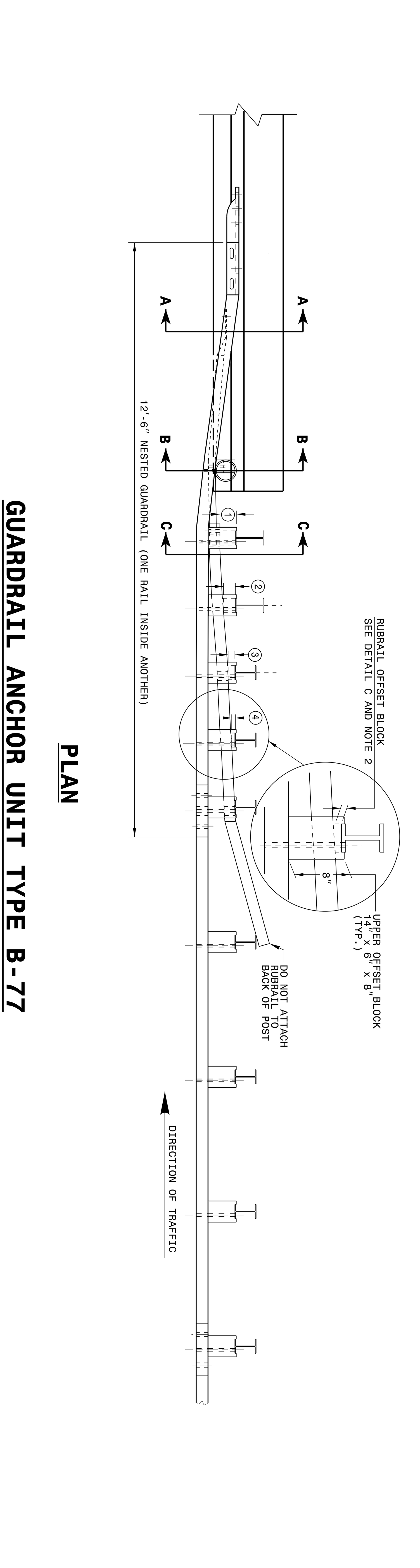

GENERAL NOTES:
1) POSTS 1 THROUGH 5 REQUIRE AN ADDITIONAL HOLE TO ATTACH LOWER BLOCKOUTS AND/OR RUBRAIL.
2) RUBRAIL BLOCKOUTS LOCATED ON POSTS 1 THROUGH 4 ARE OFFSET DRILLED AND SECURED WITH 5/8" BUTTONHEAD BOLTS (SEE CHART FOR BOLT LENGTHS). SECURE BLOCKS ONLY TO POSTS 2 AND 4. SECURE RUBRAIL AND BLOCKOUTS TO POSTS 1 AND 3. RUBRAIL IS SECURED TO POST 5 WITH A 5/8" x 4½" BUTTONHEAD BOLT. RUBRAIL IS FLARED TO BACK OF POST 6 AND NOT SECURED.
3) STEEL SPACER TUBE IS A SCHEDULE 40 GALVANIZED PIPE 6" INSIDE DIAMETER x 9" LONG. ATTACH TUBE TO GUARDRAIL ONLY WITH 5/8" x 1¼" LONG BUTTONHEAD BOLT AND RECTANGULAR PLATE WASHER.
4) SEE DETAIL D FOR SLOPED RUBRAIL BLOCKOUT. BLOCKOUT IS ATTACHED TO RAIL ELEMENT ONLY. USE 3/8" x 3" LAG BOLT WITH FLAT WASHER.
5) SHOP FABRICATE THE C6 x 8.2 RUBRAIL END TO BE CONSISTENT WITH THE SLOPE OF THE F SHAPE AND ATTACH FLUSH WITH THE SLOPED TOE OF THE BARRIER OR BRIDGE RAIL.
6) ANCHORAGE:
(a) AT EXISTING BRIDGE RAIL AND NEW OR EXISTING BARRIERS, ANCHOR RUBRAIL USING THREE 5/8" x 6" CHEMICALLY ANCHORED BOLTS WITH WASHERS. MAXIMUM PROJECTION FOR BOLTS IS ½".
(b) AT EXISTING BRIDGE RAIL AND NEW OR EXISTING BARRIERS, ANCHOR THE W-BEAM END SHOE USING A 4 BOLT HOLD DOWN PLATE (SEE STD. DWG. 862.04). A 4 BOLT INSERT ASSEMBLY IS ALLOWED ON PRECAST REINFORCED CONCRETE BARRIER (SEE STD. DWG. 857.01). INSTALL THE W-BEAM END SHOE BEHIND THE NESTED W-BEAM ELEMENTS.
(c) AT NEW BRIDGE RAIL, ANCHOR THE W-BEAM END SHOE AND RUBRAIL AS DETAILED ON THE STRUCTURE PLANS.
7) POSTS 1 AND 2 ARE W8 x 13, 7'-6" LONG. ALL OTHER POSTS IN THE ANCHOR UNIT ARE W6 x 8.5.

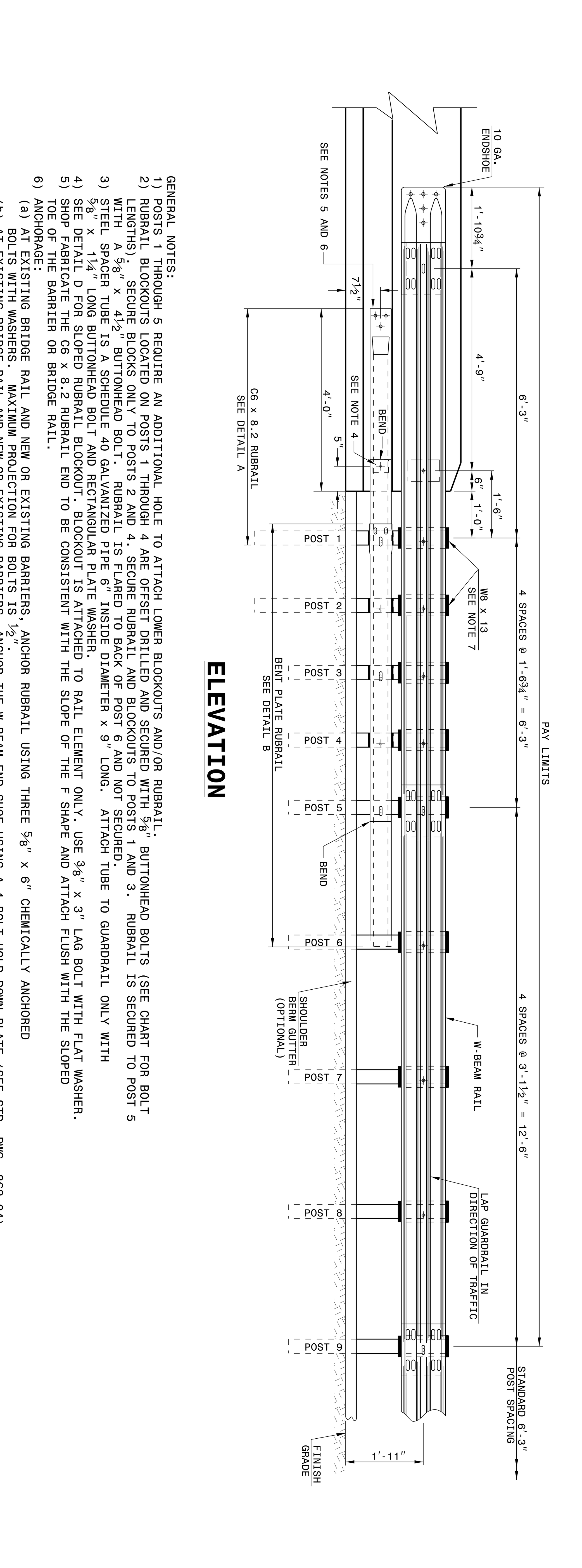

ENGLISH DETAIL DRAWING FOR
STRUCTURE ANCHOR UNIT
GUARDRAIL ANCHOR UNIT TYPE B-77
FOR F-SHAPE BARRIER

STATE OF NORTH CAROLINA
DEPT. OF TRANSPORTATION
DIVISION OF HIGHWAYS
RALEIGH, N.C.

SHEET 4 OF 7
862D03

NORTH CAROLINA PROFESSIONAL ENGINEER SEAL 022966 Joel S. Howerton
DocuSigned by: Joel Howerton 10/3/2014

CONTRACT STANDARDS AND DEVELOPMENT UNIT
Office 919-707-6950 FAX 919-250-4119

SEE TITLE BLOCK

ORIGINAL BY: J HOWERTON DATE: 06-22-12
MODIFIED BY: DATE:
CHECKED BY: DATE:
FILE SPEC.: