PROJECT REFERENCE NO.	SHEET NO.
R-4903	2A-5
ROADWAY DESIGN ENGINEER	PAVEMENT DESIGN ENGINEER
SEAL 027373 SUSAN C. LANCASTER	SEAL 022896 CLARK S. MORRISON
Susan C. Lancaster 10/7/2014	Clark S. Morrison 10/7/2014

PAVEMENT SCHEDULE
FINAL PAVEMENT DESIGN

C1	1.5" S9.5B
C2	3" S9.5B
C3	VAR. S9.5B
C4	1.5" S9.5C
C5	3" S9.5C
C6	VAR. S9.5C
C7	2.5" SF9.5A
C8	VAR. SF9.5A
D1	2.5" I19.0B
D2	4" I19.0B
D3	VAR. I19.0B
D4	4" I19.0C
D5	VAR. I19.0C
E1	4" B25.0B
E2	4.5" B25.0B
E3	5.5" B25.0B
E4	VAR. B25.0B
E5	4.5" B25.0C
E6	VAR. B25.0C
J1	10" ABC
J2	VAR. ABC
P	PRIME COAT
R1	2'-6" C & G
R2	EXP. GUTTER
R3	1'-6" C & G
R4	5" CONC. ISLD.
T	EARTH MATERIAL
U	EXIST. PAVEMENT
W	WEDGING

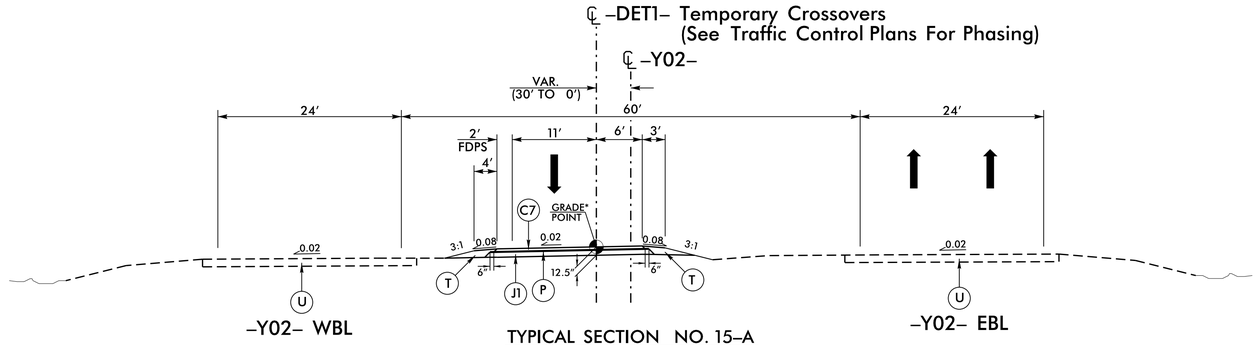

TYPICAL SECTION NO. 15–A

USE TYPICAL SECTION NO. 15–A

–DET1– STA. 10+00.00 TO STA. 14+34.61
–DET1– STA. 25+51.84 TO STA. 30+08.81

USE GRADE POINT
–DET1– STA. 10+84.08 TO 14+34.61
–DET1– STA. 25+51.84 TO 29+20.72
*MATCH EXISTING ELEVATION
–DET1– STA. 10+00.00 TO 10+84.08
–DET1– STA. 29+20.72 TO 30+08.81

NOTE: PHASE 1 DETOUR PLAN SHEETS 2B–1 AND 2B–2

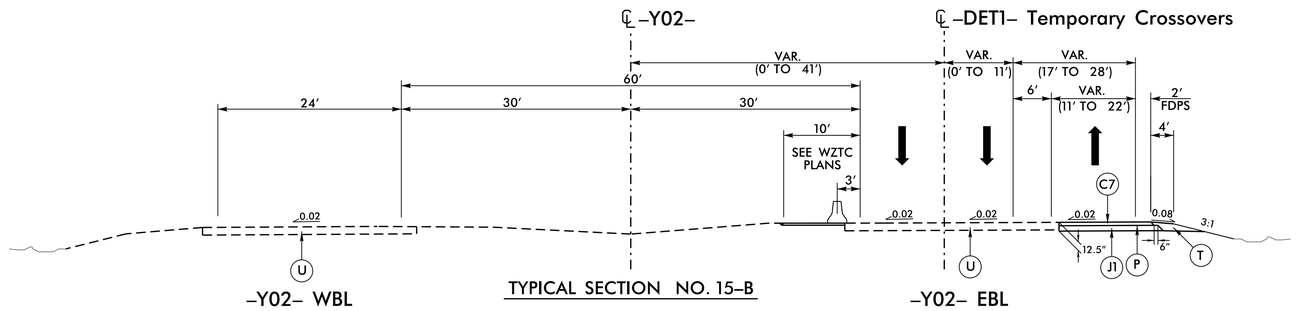

TYPICAL SECTION NO. 15–B

USE TYPICAL SECTION NO. 15–B

–DET1– STA. 14+34.61 TO STA. 25+51.84

NOTE: PHASE 1 DETOUR PLAN SHEETS 2B–1 AND 2B–2

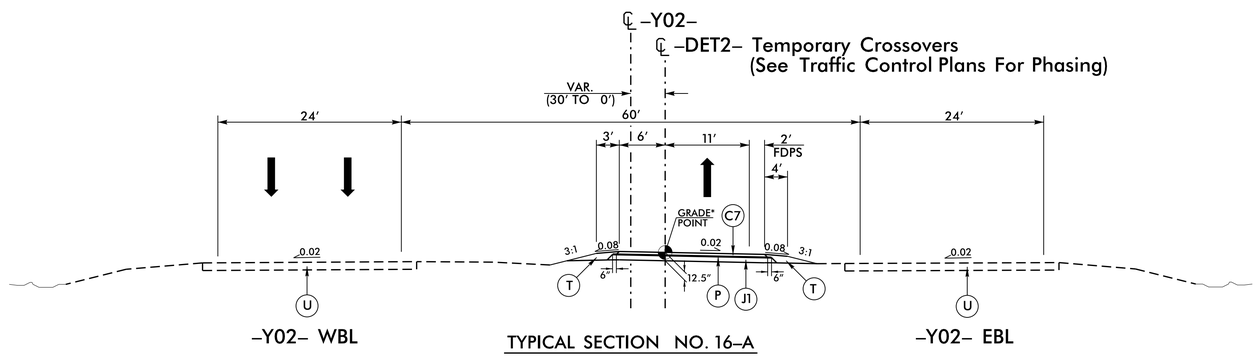

TYPICAL SECTION NO. 16–A

USE TYPICAL SECTION NO. 16–A

–DET2– STA. 10+00.00 TO STA. 14+78.95
–DET2– STA. 25+84.51 TO STA. 30+67.58

USE GRADE POINT
–DET2– STA. 10+81.43 TO 14+78.95
–DET2– STA. 25+84.51 TO 29+81.48
*MATCH EXISTING ELEVATION
–DET2– STA. 10+00.00 TO 10+81.43
–DET2– STA. 29+81.48 TO 30+76.90

NOTE: PHASE 2 DETOUR PLAN SHEETS 2B–3 AND 2B–4

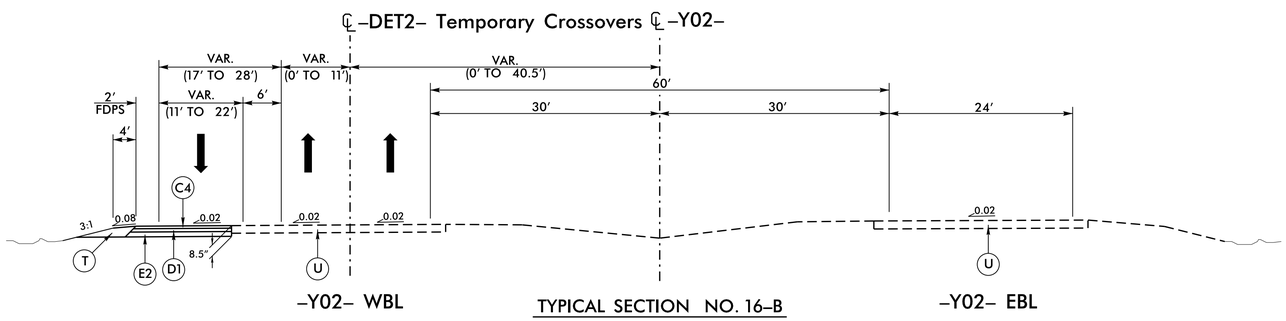

TYPICAL SECTION NO. 16–B

USE TYPICAL SECTION NO. 16–B

–DET2– STA. 14+78.95 TO STA. 22+39.01 (TIE TO BEGIN BRIDGE)
–DET2– STA. 23+96.52 (TIE TO END BRIDGE) TO STA. 25+84.51

NOTE: PHASE 2 DETOUR PLAN SHEETS 2B–3 AND 2B–4

30-SEP-2014 14:28
R:\Roadway\Proj\R4903_Rdy_typ.dgn
$$$$USERNAME$$$$