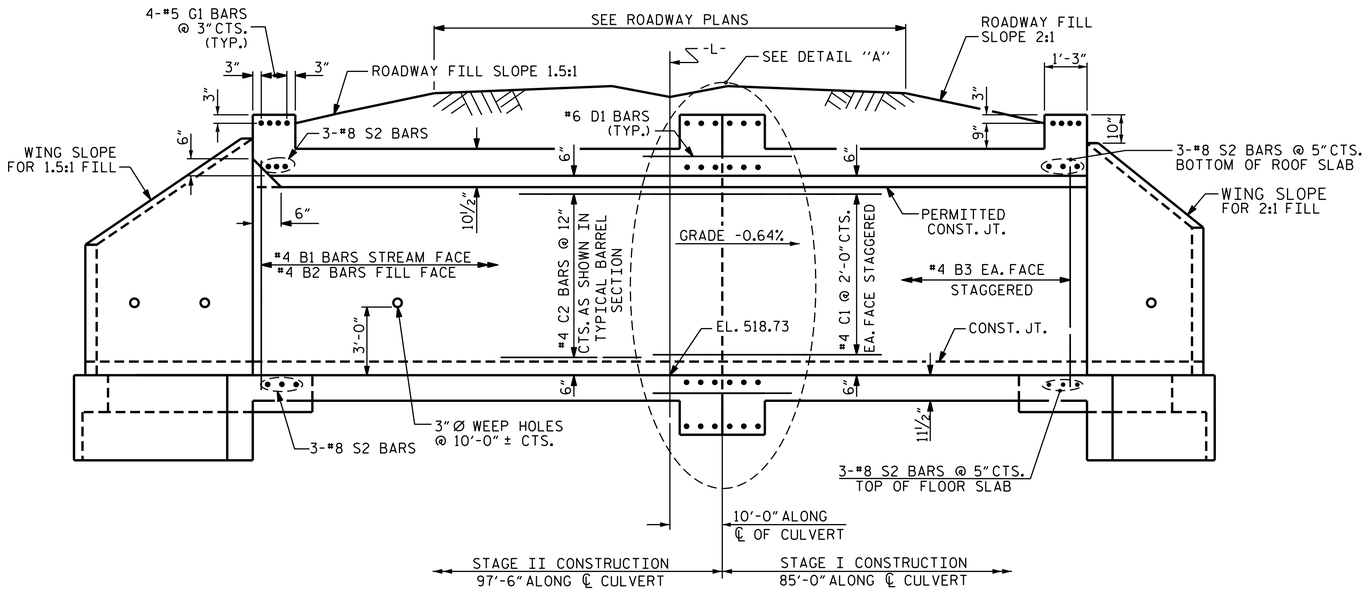

CULVERT SECTION NORMAL TO ROADWAY

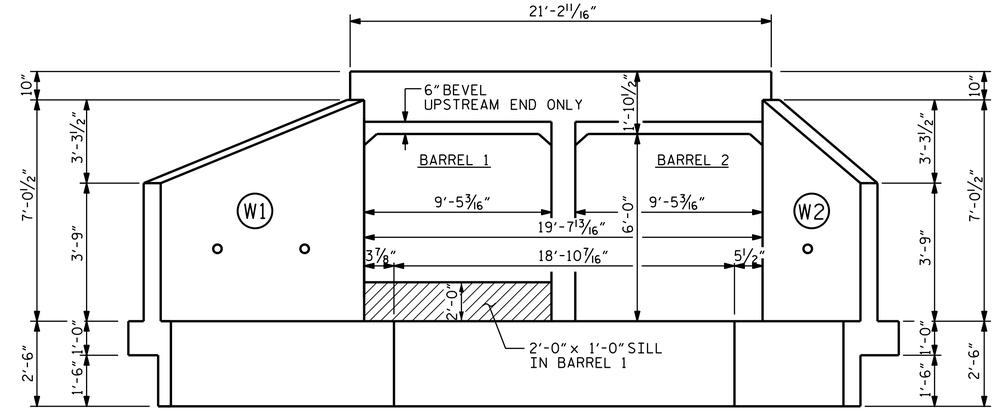

INLET END ELEVATION

NORMAL TO SKEW

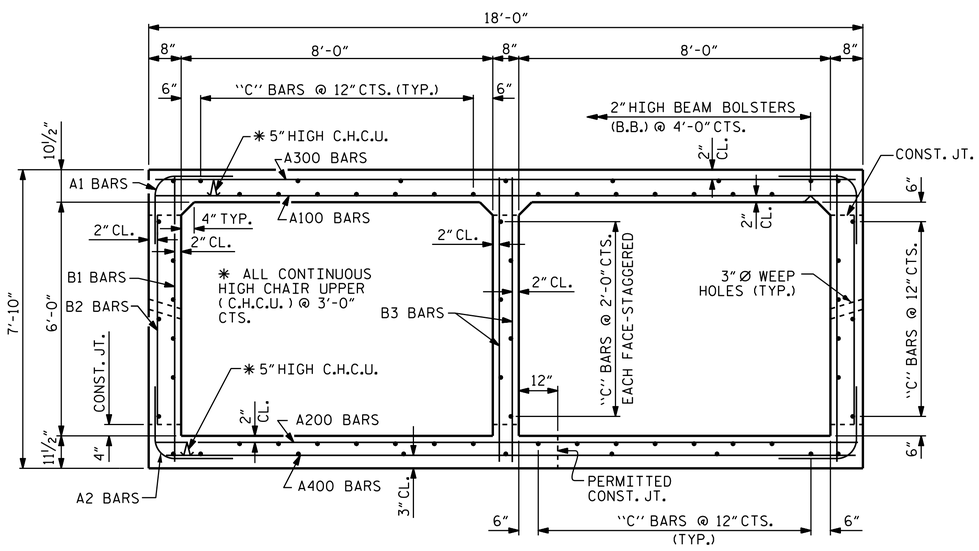

RIGHT ANGLE SECTION OF BARREL

THERE ARE 66 "C" BARS IN SECTION OF BARREL.

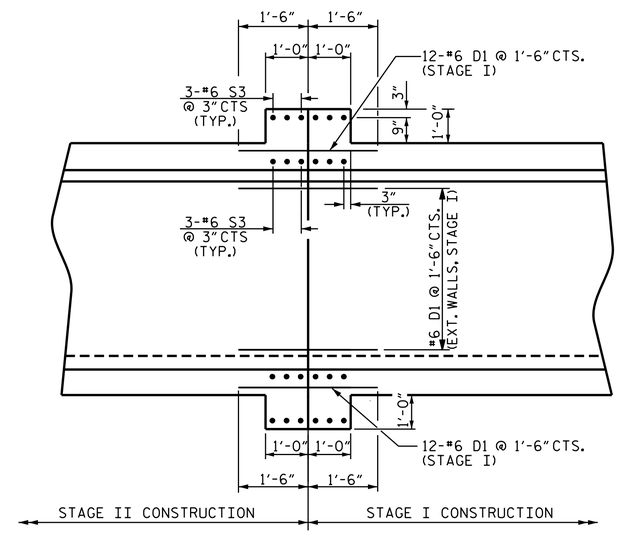

DETAIL "A"

PROJECT NO. R-0623

MONTGOMERY COUNTY

STATION: 53+95.00 -L-

SHEET 2 OF 7

STATE OF NORTH CAROLINA
DEPARTMENT OF TRANSPORTATION
RALEIGH

BARREL STANDARD

DOUBLE 8 FT. X 6 FT. CONCRETE BOX CULVERT 122° SKEW

NORTH CAROLINA PROFESSIONAL SEAL 36871 ENGINEER FRANCESCA LEA

9/29/2014

DocuSigned by: Francesca Lea 2029451113774BE...

REVISIONS								SHEET NO.
NO.	BY:	DATE:	NO.	BY:	DATE:			C-2
1			3					TOTAL SHEETS
2			4					29

CULVERT #1

ASSEMBLED BY : F. LEA	DATE : 12-2012	SPECIAL	
CHECKED BY : S. WANCE	DATE : 01-2013		
DRAWN BY : W.BRYAN STALEY II	DATE : NOV.5,1971	STANDARD	
CHECKED BY : JOEL A. JOHNSON	DATE : NOV.13,1971		

REVISED 11-19-99 BY M.W. CHECKED BY R.W.W.
REVISED 8-23-99 BY E.L.R. CHECKED BY G.P.P.
REDRAWN 8/1990 BY S.A.L., CHECKED BY E.L.R.