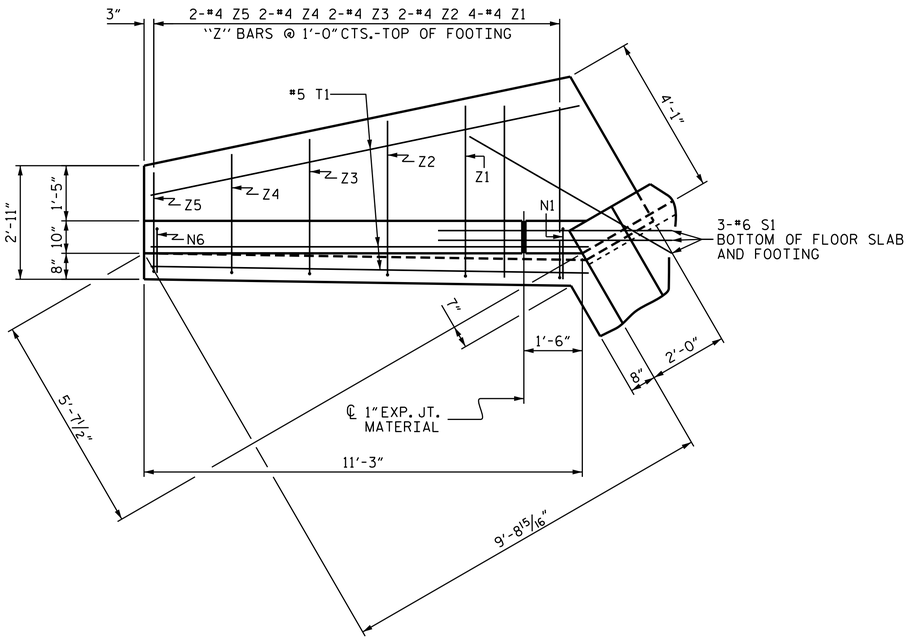

PLAN

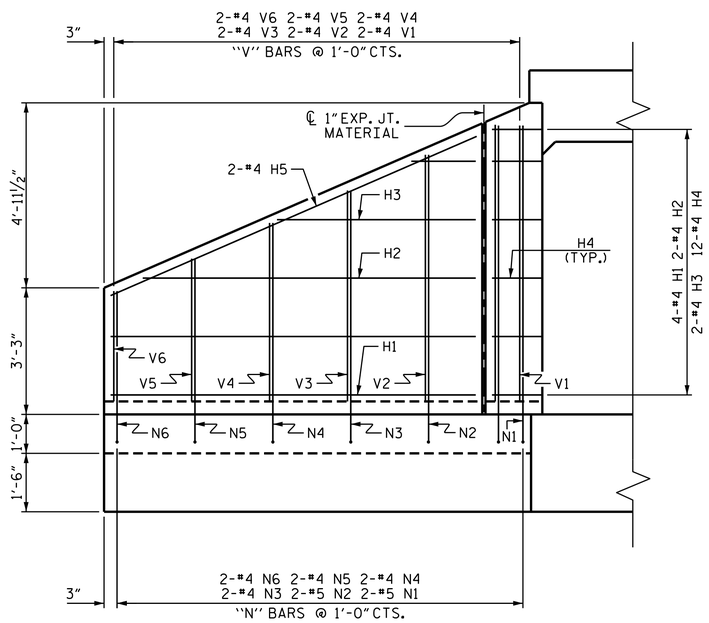

ELEVATION

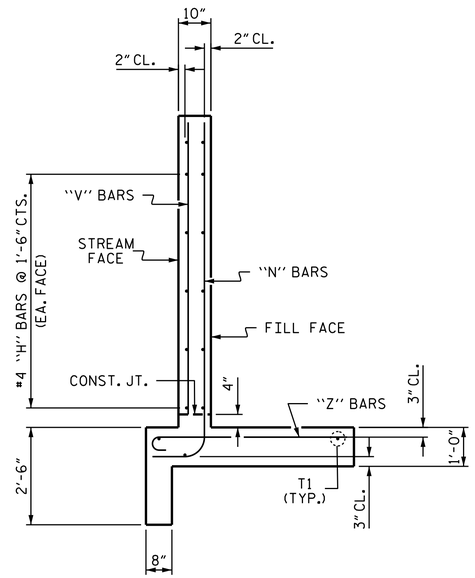

TYPICAL WING SECTION

BAR TYPES

ALL BAR DIMENSIONS ARE OUT TO OUT.

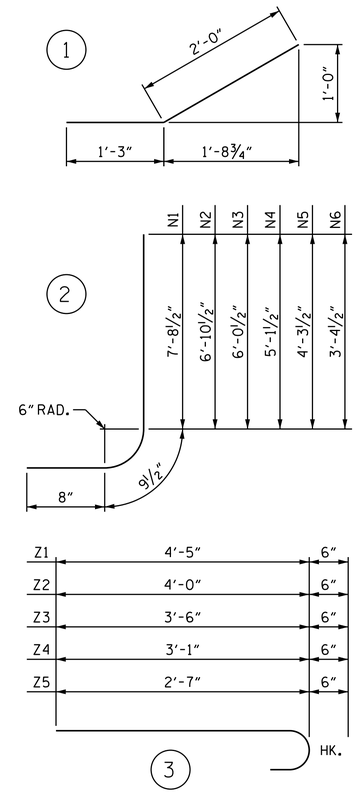

BILL OF MATERIAL

BAR	NO.	SIZE	TYPE	LENGTH	WEIGHT
H1	16	#4	STR	9'-4"	100
H2	8	#4	STR	8'-6"	45
H3	8	#4	STR	5'-1"	27
H4	48	#4	1	3'-3"	104
H5	8	#4	STR	10'-3"	55
N1	8	#5	2	9'-2"	76
N2	8	#5	2	8'-4"	70
N3	8	#4	2	7'-6"	40
N4	8	#4	2	6'-7"	35
N5	8	#4	2	5'-9"	31
N6	8	#4	2	4'-10"	26
S1	12	#6	STR	6'-0"	108
T1	12	#5	STR	11'-3"	141
V1	8	#4	STR	7'-1"	38
V2	8	#4	STR	6'-4"	34
V3	8	#4	STR	5'-5"	29
V4	8	#4	STR	4'-7"	24
V5	8	#4	STR	3'-8"	20
V6	8	#4	STR	2'-10"	15
Z1	16	#4	3	4'-11"	53
Z2	8	#4	3	4'-6"	24
Z3	8	#4	3	4'-0"	21
Z4	8	#4	3	3'-7"	19
Z5	8	#4	3	3'-1"	16

TOTAL REINFORCING STEEL
FOR 4 WINGS 1151 LBS

CLASS A CONCRETE
4 WINGS 17.1 CY
2 HEADWALLS 2.2 CY
2 END CURTAIN WALLS 2.7 CY
TOTAL 22.0 CY

PROJECT NO. R-0623
MONTGOMERY COUNTY
STATION: 283+62.00 -L-

SHEET 4 OF 5

NORTH CAROLINA PROFESSIONAL SEAL 21545 ENGINEER STEVEN L. WANCE
9/29/2014
DocuSigned by: Steve L. Wance
986CB74EEDF1402...

STATE OF NORTH CAROLINA
DEPARTMENT OF TRANSPORTATION
RALEIGH

STANDARD WINGS FOR CONCRETE BOX CULVERT

H = 7'-0" SLOPE = 2:1
90° SKEW

REVISIONS						SHEET NO.
NO.	BY:	DATE:	NO.	BY:	DATE:	C-28
1			3			TOTAL SHEETS
2			4			29

ASSEMBLED BY : S. WANCE DATE : 12/12
CHECKED BY : F. LEA DATE : 12/12
DRAWN BY : CCJ 10/99
CHECKED BY : RWW 03/00