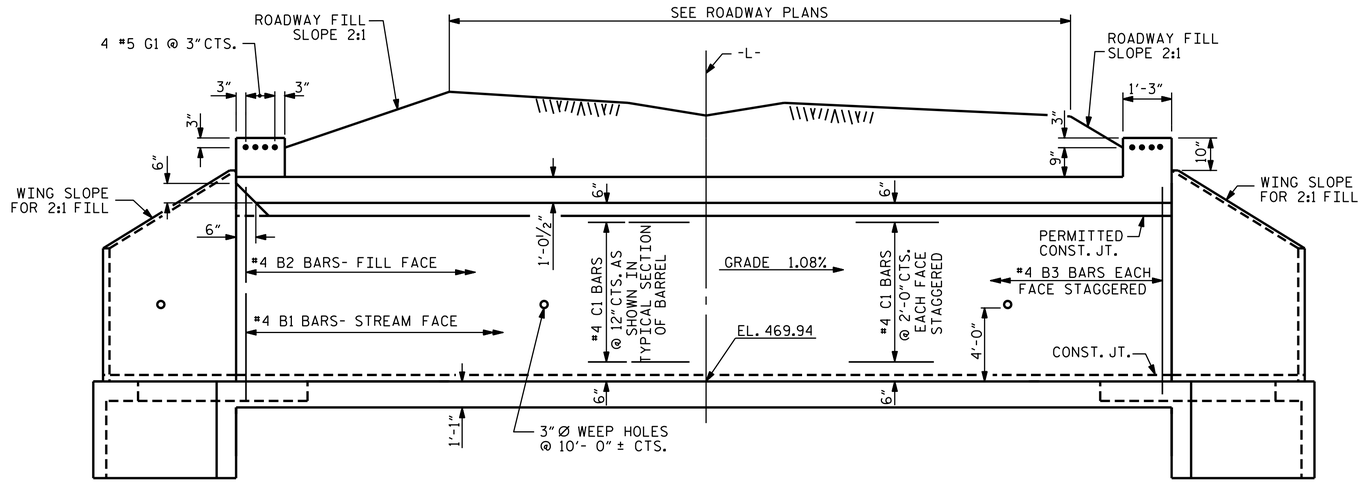

CULVERT SECTION NORMAL TO ROADWAY

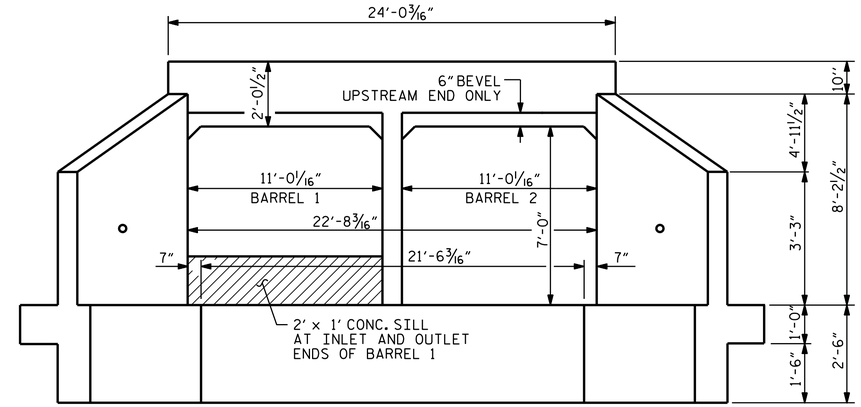

INLET END ELEVATION

NORMAL TO SKEW

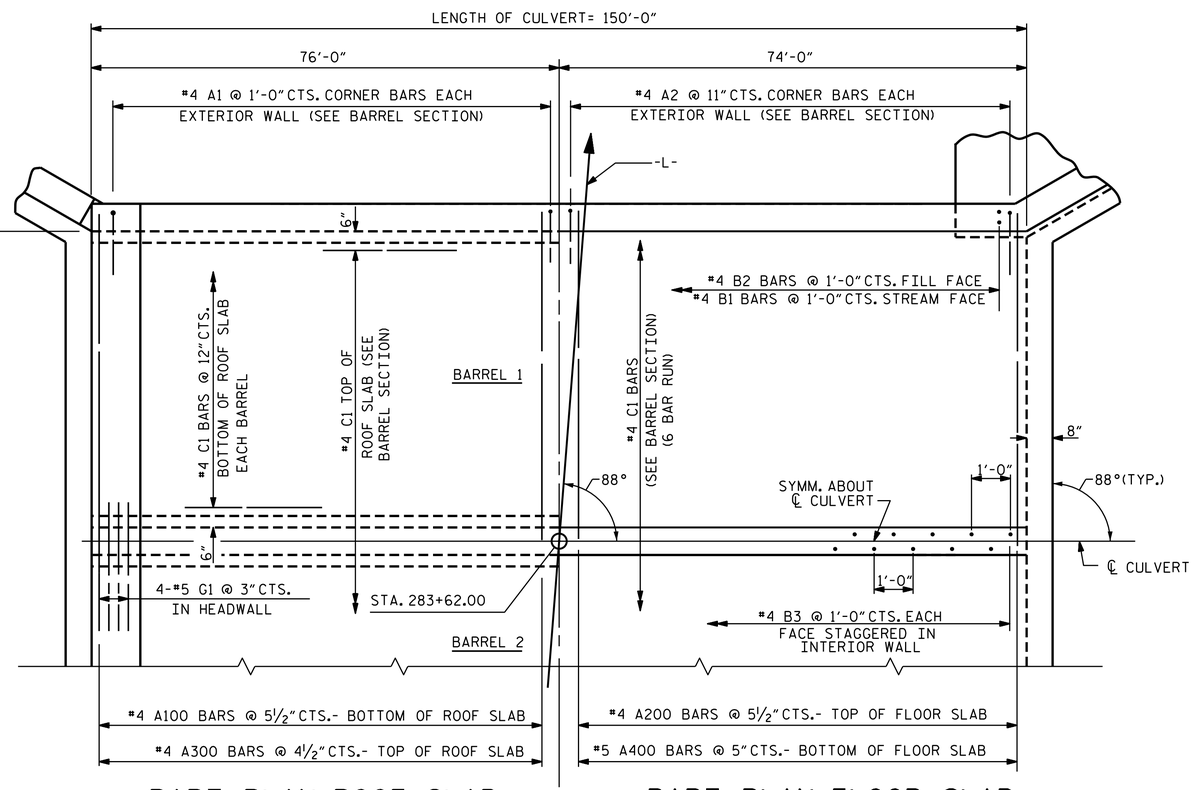

PART PLAN-ROOF SLAB

PART PLAN-FLOOR SLAB

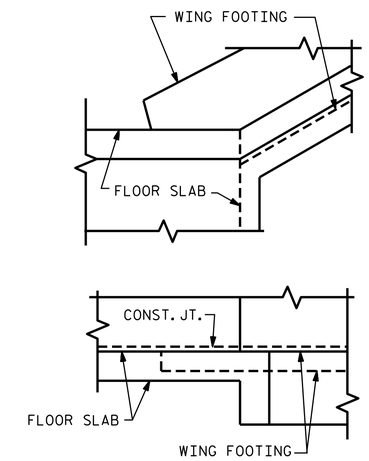

DETAIL

CONNECTION OF WING FOOTING AND FLOOR SLAB WHEN SLAB IS THICKER THAN FOOTING

PROJECT NO. R-0623

MONTGOMERY COUNTY

STATION: 283+62.00 -L-

SHEET 2 OF 5

STATE OF NORTH CAROLINA
DEPARTMENT OF TRANSPORTATION
RALEIGH

DOUBLE 11 FT. X 7 FT. CONCRETE BOX CULVERT 88° SKEW

NORTH CAROLINA PROFESSIONAL SEAL 21545 ENGINEER STEVEN L. WANCE

9/29/2014

DocuSigned by: Steve L. Wance
986CB74EEDF1402...

REVISIONS						
NO.	BY:	DATE:	NO.	BY:	DATE:	
1			3			
2			4			

SHEET NO. C-26

TOTAL SHEETS 29

CULVERT #5

CHECKED BY : F. LEA DATE : 12/12
ASSEMBLED BY : S. WANCE DATE : 12/12
DESIGN ENGINEER OF RECORD: S. WANCE DATE : 12/12

DRAWN BY : RALPH D. UNDERWOOD DATE : MAY 1971
CHECKED BY : JOEL A. JOHNSON DATE : JULY 1971

SPECIAL

STANDARD

REVISED 11-19-99 BY M.M. CHECKED BY R.W.W.
REDRAWN NOV. 1990 BY TSS CHECKED BY ARB