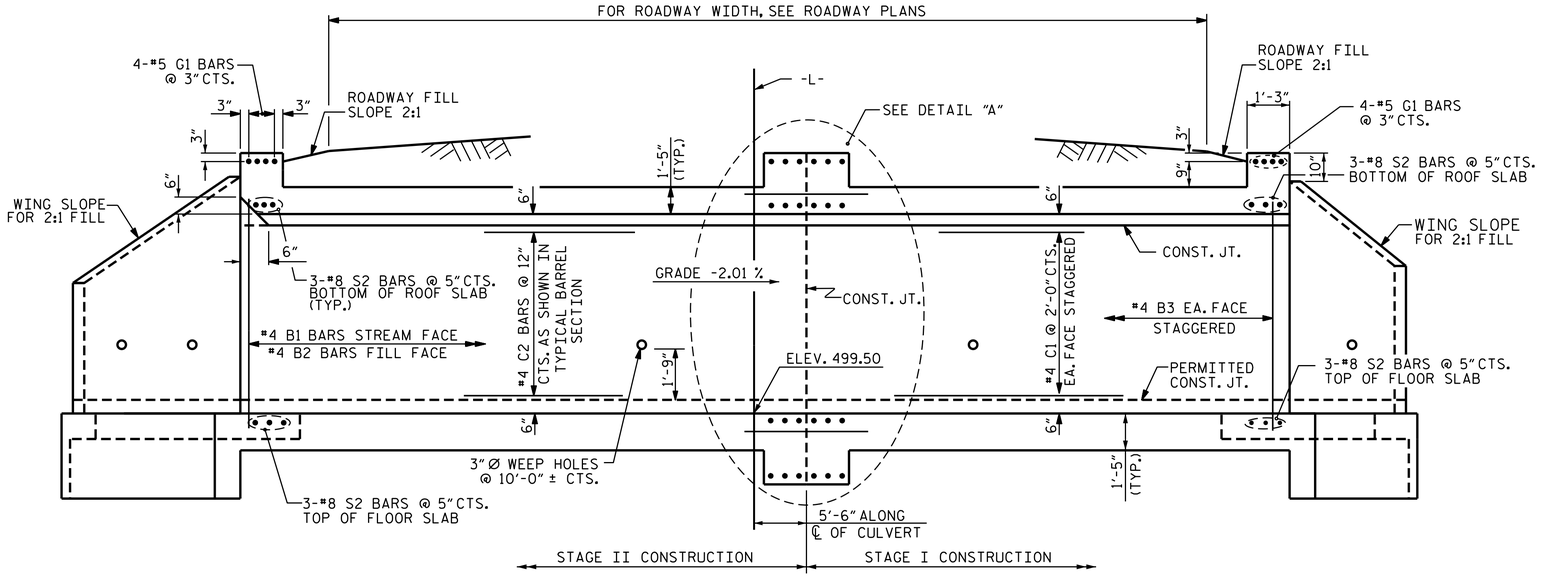

CULVERT SECTION NORMAL TO ROADWAY

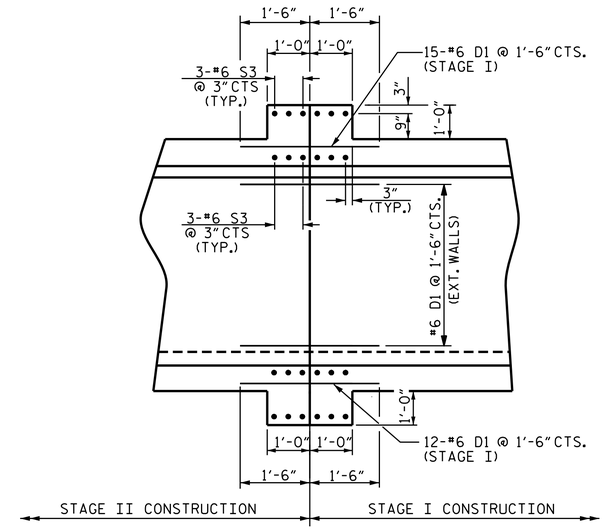

DETAIL "A"

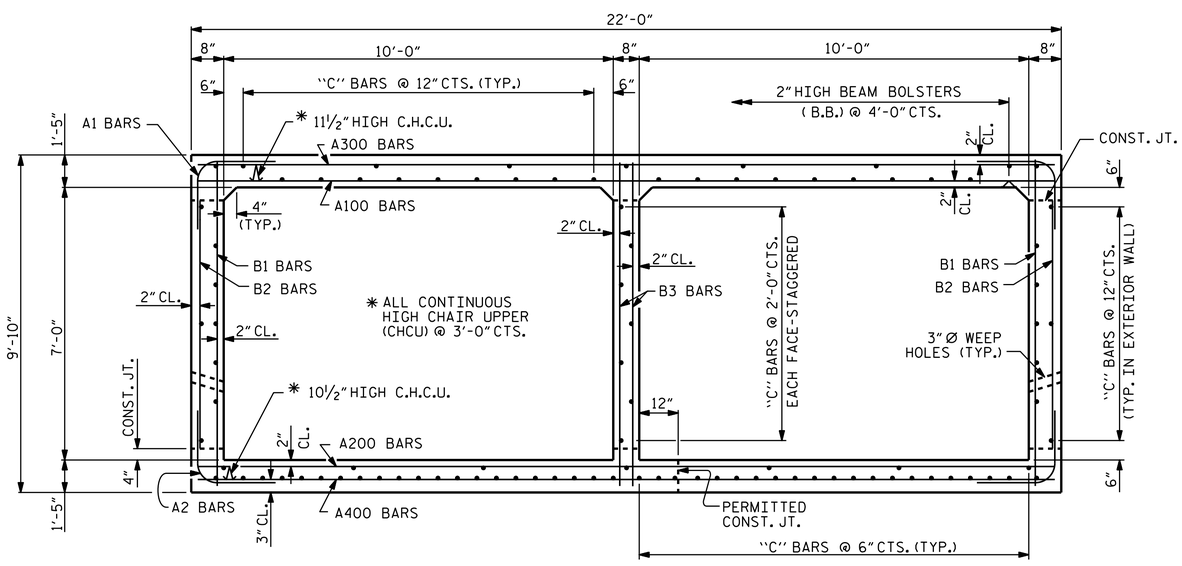

RIGHT ANGLE SECTION OF BARREL

THERE ARE 99 "C" BARS IN SECTION OF BARREL.

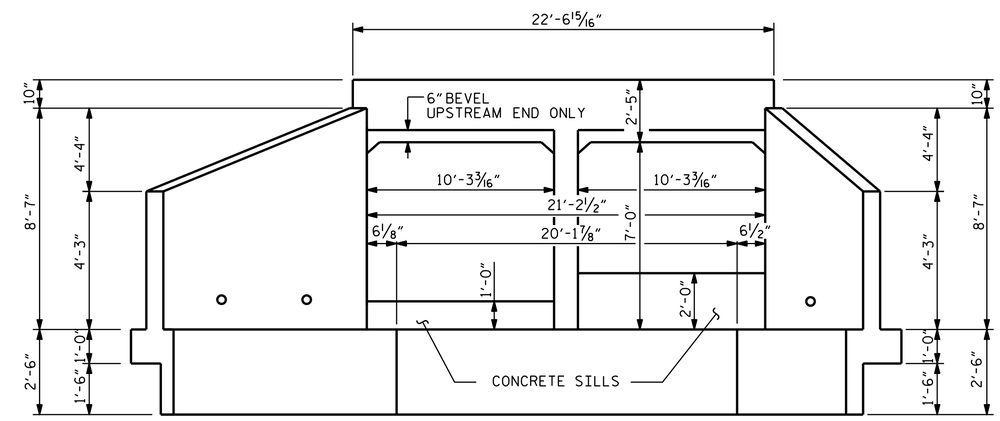

INLET END ELEVATION

NORMAL TO SKEW

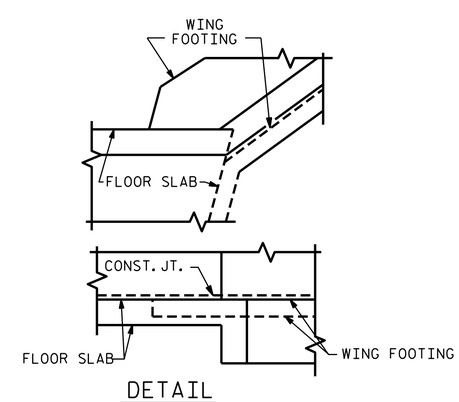

DETAIL

CONNECTION OF WING FOOTING AND FLOOR SLAB

WHEN SLAB IS THICKER THAN FOOTING

PROJECT NO. R-0623

MONTGOMERY COUNTY

STATION: 77+04.00 -L-

SHEET 2 OF 7

STATE OF NORTH CAROLINA
DEPARTMENT OF TRANSPORTATION
RALEIGH

BARREL STANDARD

DOUBLE 10 FT. X 7 FT. CONCRETE BOX CULVERT 103° SKEW

NORTH CAROLINA PROFESSIONAL SEAL 25461 ENGINEER EMMANUEL I. OMILE

9/29/2014

DocuSigned by: 6581102288E1B425...

REVISIONS						SHEET NO.
NO.	BY:	DATE:	NO.	BY:	DATE:	C-9
1			3			TOTAL SHEETS
2			4			29

CULVERT #2

STD. NO. CB332

ASSEMBLED BY : E.I. OMILE DATE : 1-17-13
CHECKED BY : S. WANCE DATE : 3/13

DRAWN BY : W.BRYAN STALEY II DATE : NOV.5,1971
CHECKED BY : JOEL A. JOHNSON DATE : NOV.13,1971

REVISED 11-19-99 BY M.M. CHECKED BY R.W.W.
REVISED 8-29-92 BY E.L.R. CHECKED BY C.R.P.
REDRAWN 8/1990 BY S.A.L. CHECKED BY E.L.R.