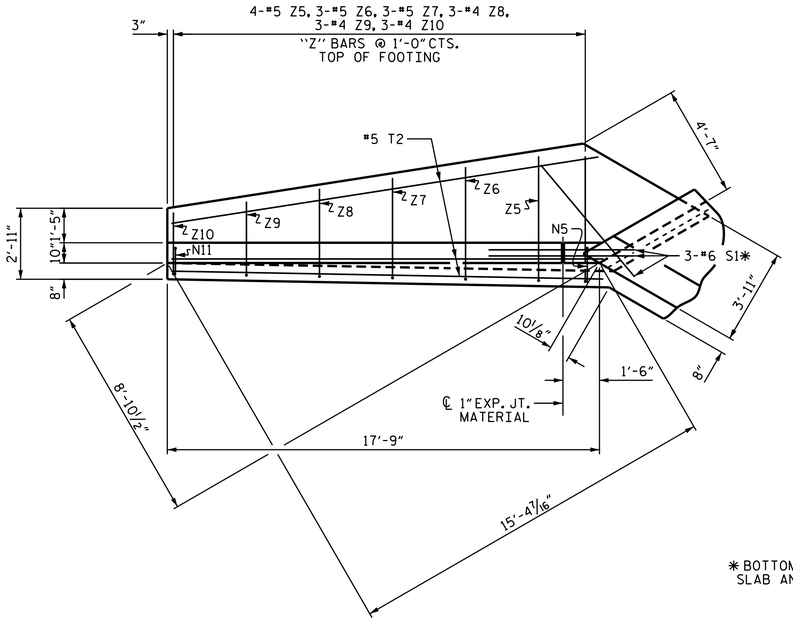

PLAN W1

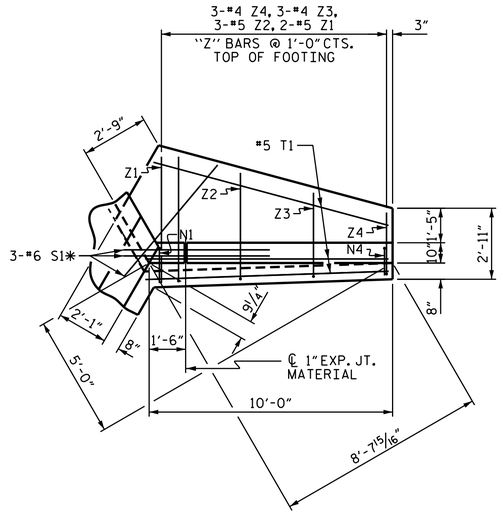

PLAN W2

* BOTTOM OF FLOOR
SLAB AND FOOTING

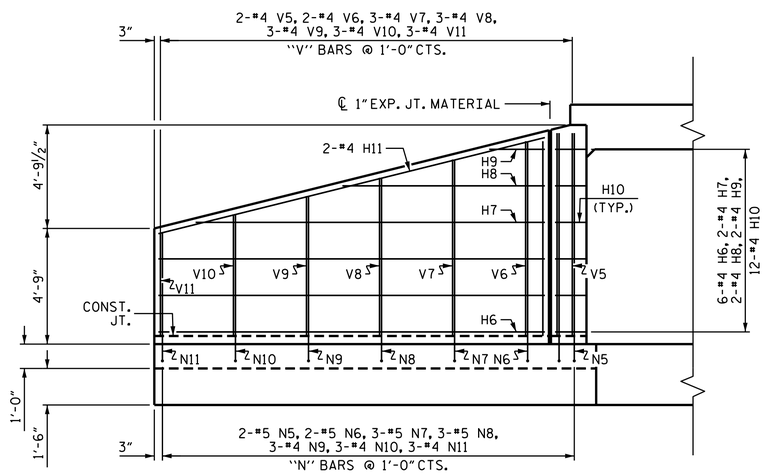

ELEVATION W1

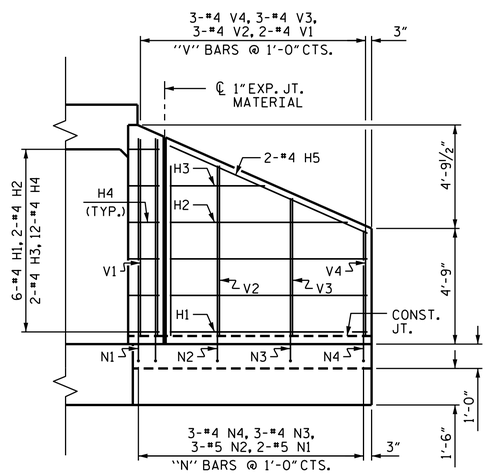

ELEVATION W2

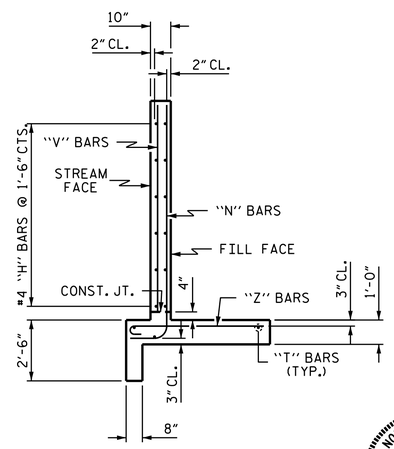

TYPICAL
WING SECTION

BAR TYPES

ALL BAR DIMENSIONS ARE OUT TO OUT.

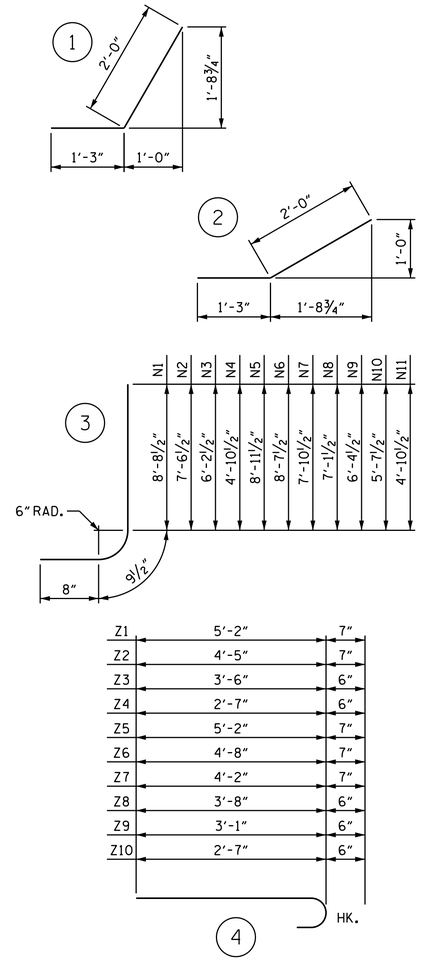

BILL OF MATERIAL

BAR	NO.	SIZE	TYPE	LENGTH	WEIGHT
H1	12	#4	STR	8'-1"	65
H2	4	#4	STR	7'-3"	19
H3	4	#4	STR	3'-11"	10
H4	24	#4	1	3'-3"	52
H5	4	#4	STR	8'-10"	24
H6	12	#4	STR	15'-10"	127
H7	4	#4	STR	14'-4"	38
H8	4	#4	STR	8'-3"	22
H9	4	#4	STR	2'-3"	6
H10	24	#4	2	3'-3"	52
H11	4	#4	STR	16'-4"	44
N1	4	#5	3	10'-2"	42
N2	6	#5	3	9'-0"	56
N3	6	#4	3	7'-8"	31
N4	6	#4	3	6'-4"	25
N5	4	#5	3	10'-5"	43
N6	4	#5	3	10'-1"	42
N7	6	#5	3	9'-4"	58
N8	6	#5	3	8'-7"	54
N9	6	#4	3	7'-10"	31
N10	6	#4	3	7'-1"	28
N11	6	#4	3	6'-4"	25
S1	12	#6	STR	6'-0"	108
T1	6	#5	STR	10'-0"	63
T2	6	#5	STR	17'-9"	111
V1	4	#4	STR	8'-1"	22
V2	6	#4	STR	7'-0"	28
V3	6	#4	STR	5'-8"	23
V4	6	#4	STR	4'-4"	17
V5	4	#4	STR	8'-4"	22
V6	4	#4	STR	8'-0"	21
V7	6	#4	STR	7'-3"	29
V8	6	#4	STR	6'-6"	26
V9	6	#4	STR	5'-9"	23
V10	6	#4	STR	5'-0"	20
V11	6	#4	STR	4'-3"	17
Z1	4	#5	4	5'-9"	24
Z2	6	#5	4	5'-0"	31
Z3	6	#4	4	4'-0"	16
Z4	6	#4	4	3'-1"	12
Z5	8	#5	4	5'-9"	48
Z6	6	#5	4	5'-3"	33
Z7	6	#5	4	4'-9"	30
Z8	6	#4	4	4'-2"	17
Z9	6	#4	4	3'-7"	14
Z10	6	#4	4	3'-1"	12

REINFORCING STEEL FOR 4 WINGS 1661 LBS

CLASS A CONCRETE
4 WINGS 24.3 CY
2 HEADWALLS 2.8 CY
2 END CURTAIN WALLS 3.3 CY
TOTAL 30.4 CY

PROJECT NO. R-0623
MONTGOMERY COUNTY
STATION: 204+38.00 -L-

SHEET 4 OF 5

STATE OF NORTH CAROLINA
DEPARTMENT OF TRANSPORTATION
RALEIGH

STANDARD WINGS FOR CONCRETE BOX CULVERT

H = 8'-0" SLOPE = 2:1
120° SKEW

NORTH CAROLINA PROFESSIONAL SEAL 16301 ENGINEER TING HSIUNG FANG
9/29/2014

DocuSigned by: Ting H. Fang
E72084A0977435

ASSEMBLED BY : T. KIRSCHBAUM DATE : 2/25/13
CHECKED BY : E. OMLIE DATE : 2/26/13

DRAWN BY : CCJ 11/99
CHECKED BY : RWW 03/00

REVISIONS								SHEET NO.
NO.	BY:	DATE:	NO.	BY:	DATE:			C-23
1			3					TOTAL SHEETS
2			4					29

CULVERT #4

STD. NO. CW6008