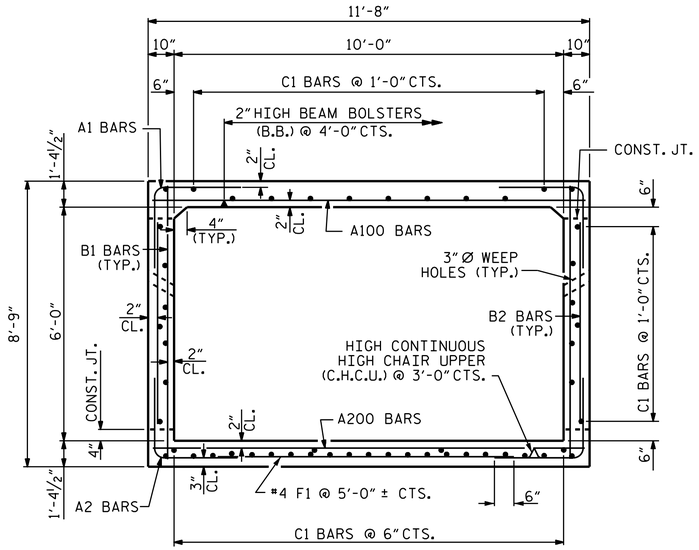

RIGHT ANGLE SECTION OF BARREL

THERE ARE 51 C1 BARS IN SECTION OF BARREL

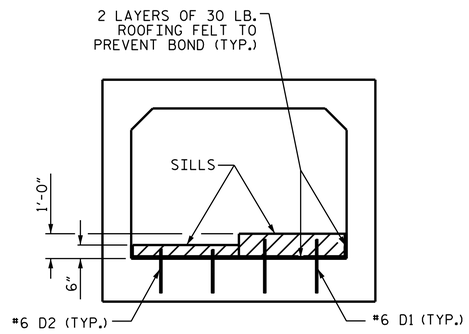

SECTION A-A

SILLS AT THE END OF CULVERT ARE ALONG THE SKEWED END. SEE PLAN VIEW.

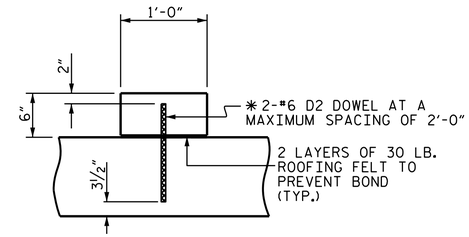

LOW SILL

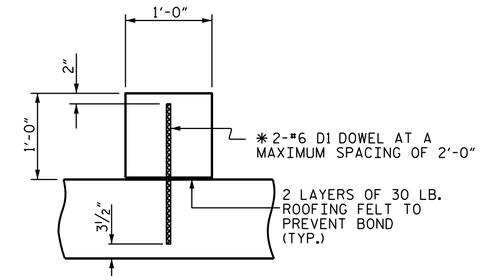

HIGH SILL

SECTION THROUGH SILL

✱ DOWELS MAY BE PUSHED INTO GREEN CONCRETE AFTER SLAB HAS BEEN FLOAT FINISHED.

BAR TYPE

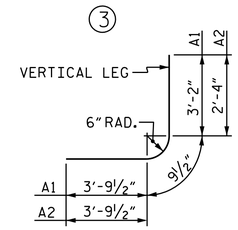

BAR DIMENSIONS ARE OUT TO OUT

SPLICE LENGTHS CHART

BAR	SIZE	SPLICE LENGTH
C1	#4	1'-11"

BILL OF MATERIAL

BAR	NO.	SIZE	TYPE	LENGTH	WEIGHT
A1	878	#4	3	7'-9"	4545
A2	878	#4	3	6'-11"	4057
A100	599	#6	STR	11'-3"	10122
A101	6	#6	STR	9'-0"	81
A102	6	#6	STR	6'-10"	62
A103	6	#6	STR	4'-8"	42
A104	6	#6	STR	2'-6"	23
A200	599	#6	STR	11'-3"	10122
A201	6	#6	STR	9'-0"	81
A202	6	#6	STR	6'-10"	62
A303	6	#6	STR	4'-8"	42
A204	6	#6	STR	2'-6"	23
B1	512	#4	STR	8'-3"	2822
B2	878	#4	STR	5'-4"	3128
C1	510	#4	STR	27'-6"	9369
D1	22	#6	STR	1'-11"	63
D2	22	#6	STR	1'-5"	47
F1	51	#4	STR	4'-9"	162
G1	4	#4	STR	13'-0"	35
S2	12	#8	STR	13'-0"	417
REINFORCING STEEL				LBS.	45,305

NOTES:

FOR BED MATERIAL, BACK FILL WITH NATIVE MATERIAL TO SILL HEIGHT.

NATIVE MATERIAL CONSISTS OF MATERIAL THAT IS EXCAVATED FROM THE STREAM BED AT THE PROJECT SITE DURING CULVERT CONSTRUCTION. NATIVE MATERIAL IS SUBJECT TO APPROVAL BY THE ENGINEER AND MAY BE SUBJECT TO PERMIT CONDITIONS.

BED MATERIAL PLACED BETWEEN SILLS IN THE CULVERT SHALL PROVIDE A CONTINUOUS LOW FLOW CHANNEL BETWEEN THE LOWER SILLS.

SILLS ARE TO BE 1 FT. WIDE AND ATTACHED BY DOWELS.

THE 1'-0" HIGH AND 6" HIGH SILLS ARE TO BE CAST AS SEPARATE UNITS.

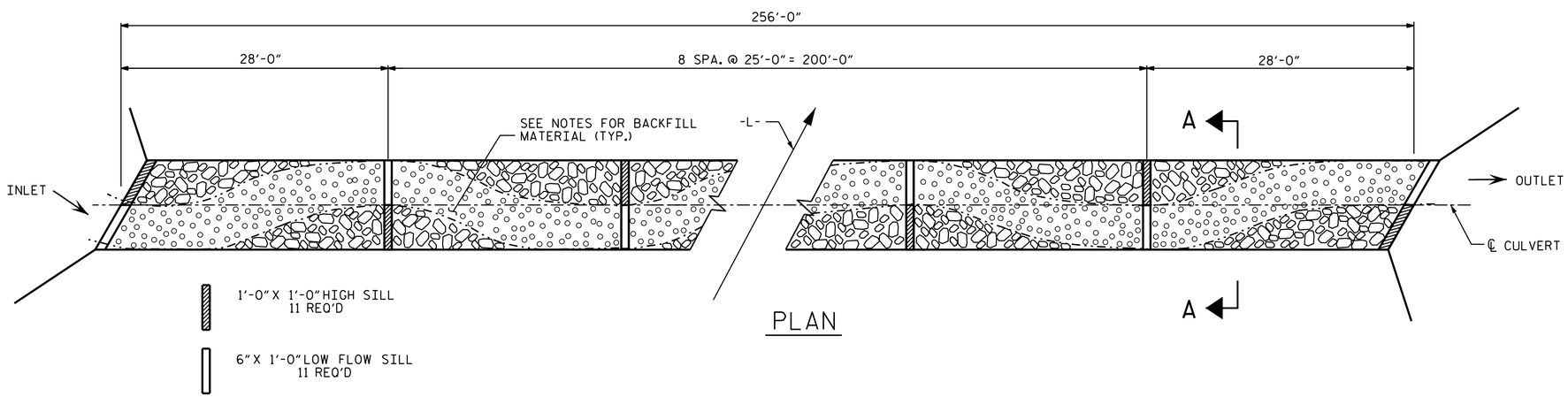

PLAN

CONCRETE SILL DETAILS

THE CONTRACTOR'S ATTENTION IS CALLED TO THE FACT THAT THE NATIVE MATERIAL BACKFILL SHALL BE PLACED PRIOR TO THE CASTING OF THE ROOF SLAB.

NORTH CAROLINA PROFESSIONAL SEAL 21545 ENGINEER STEVEN L. WANCE

9/29/2014

DocuSigned by: Steve L. Wance 986CB74EEDF1402...

PROJECT NO. R-0623

MONTGOMERY COUNTY

STATION: 188+02.00 -L-

SHEET 3 OF 5

STATE OF NORTH CAROLINA
DEPARTMENT OF TRANSPORTATION
RALEIGH

SINGLE 10 FT. X 6 FT. CONCRETE BOX CULVERT 62° SKEW

REVISIONS						SHEET NO.
NO.	BY:	DATE:	NO.	BY:	DATE:	C-17
1			3			TOTAL SHEETS
2			4			29

CULVERT #3

ASSEMBLED BY : C. L. YOKELEY DATE : 7-16-14
CHECKED BY : S. L. WANCE DATE : 7-23-14

29-SEP-2014 11:36
K:\TIPProjects-R\R0623\Structures\Plans\FinalPlans\R0623_sd_cul3.dgn
tfang