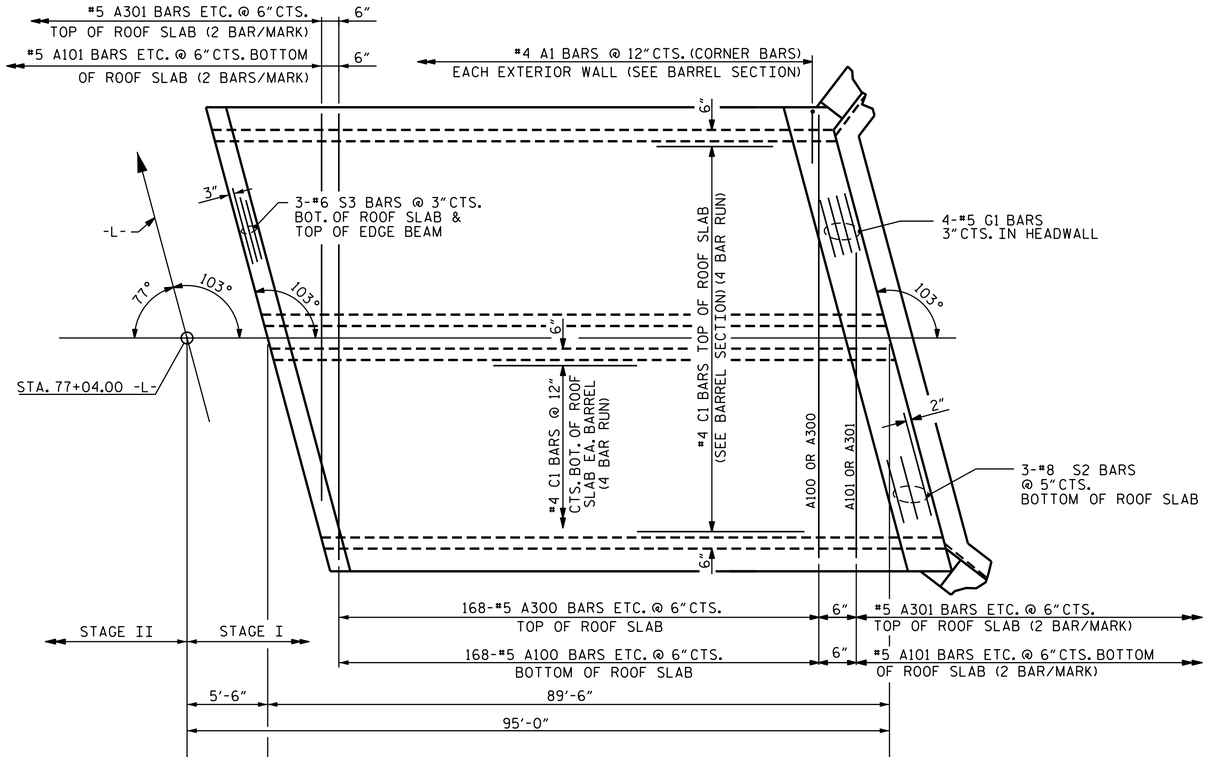

STAGE I - PLAN OF ROOF SLAB

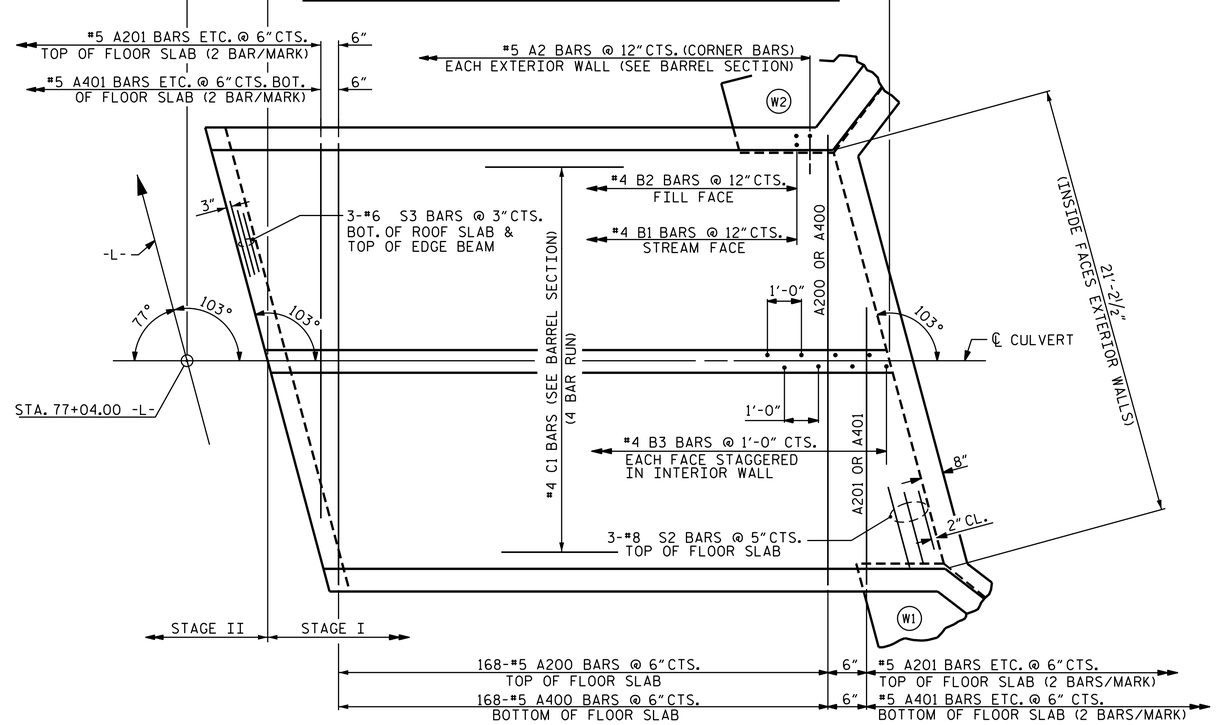

STAGE I - PLAN OF FLOOR SLAB

BAR TYPE

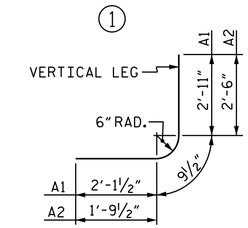

BAR DIMENSIONS ARE OUT TO OUT

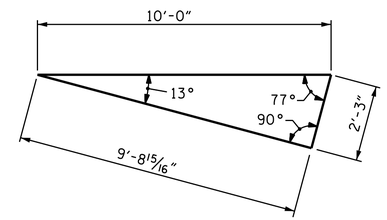

SKEW TRIANGLE

TOTAL STRUCTURE QUANTITIES STAGE I

CLASS A CONCRETE			
BARREL @ 2.835 CY/FT	253.8	C.Y.	
WINGS ETC.	11.4	C.Y.	
SILLS	3.0	C.Y.	
EDGE BEAMS	1.7	C.Y.	
TOTAL	269.9	C.Y.	
REINFORCING STEEL			
BARREL & SILLS	28,065	LBS.	
WINGS ETC.	638	LBS.	
TOTAL	28,703	LBS.	
CULVERT EXCAVATION	LUMP SUM		
FOUNDATION COND. MAT'L	164	TONS	

BILL OF MATERIAL
STAGE I

BAR	NO.	SIZE	TYPE	LENGTH	WEIGHT
A1	180	#4	1	5'-10"	701
A2	180	#5	1	5'-1"	954
A100	168	#5	STR	21'-7"	3782
A101	4	#5	STR	17'-5"	73
A102	4	#5	STR	13'-8"	57
A103	4	#5	STR	9'-11"	41
A104	4	#5	STR	6'-3"	26
A105	4	#5	STR	2'-6"	10
A200	168	#5	STR	21'-7"	3782
A201	4	#5	STR	17'-5"	73
A202	4	#5	STR	13'-8"	57
A303	4	#5	STR	9'-11"	41
A204	4	#5	STR	6'-3"	26
A205	4	#5	STR	2'-6"	10
A300	168	#5	STR	21'-7"	3782
A301	4	#5	STR	17'-5"	73
A302	4	#5	STR	13'-8"	57
A303	4	#5	STR	9'-11"	41
A304	4	#5	STR	6'-3"	26
A305	4	#5	STR	2'-6"	10
A400	168	#5	STR	21'-7"	3782
A401	4	#5	STR	17'-5"	73
A402	4	#5	STR	13'-8"	57
A403	4	#5	STR	9'-11"	41
A404	4	#5	STR	6'-3"	26
A405	4	#5	STR	2'-6"	10
B1	180	#4	STR	9'-4"	1122
B2	180	#4	STR	6'-4"	762
B3	180	#4	STR	9'-4"	1122
C1	396	#4	STR	23'-11"	6327
D1	40	#6	STR	3'-0"	180
D2	16	#6	STR	2'-0"	48
D3	8	#6	STR	3'-0"	36
G1	4	#5	STR	22'-5"	94
S2	6	#8	STR	22'-5"	359
S3	12	#6	STR	22'-5"	404
REINFORCING STEEL				LBS.	28,065

SPLICE LENGTHS CHART

BAR	SIZE	SPLICE LENGTH
C1	#4	1'-11"

PROJECT NO. R-0623
MONTGOMERY COUNTY
STATION: 77+04.00 -L-

SHEET 3 OF 7

STATE OF NORTH CAROLINA
DEPARTMENT OF TRANSPORTATION
RALEIGH

BARREL STANDARD
DOUBLE 10 FT. X 7 FT.
CONCRETE BOX CULVERT
103° SKEW
STAGE I

NORTH CAROLINA PROFESSIONAL SEAL 25461 ENGINEER EMMANUEL I. OMILE
9/29/2014
DocuSigned by:

REVISIONS						SHEET NO.
NO.	BY:	DATE:	NO.	BY:	DATE:	C-10
1			3			TOTAL SHEETS
2			4			29

CULVERT #2 STD. NO. CB332

ASSEMBLED BY : E.I. OMILE DATE : 1-17-13
CHECKED BY : S. WANCE DATE : 3/13
DRAWN BY : W.BRYAN STALEY II DATE : NOV.5,1971
CHECKED BY : JOEL A. JOHNSON DATE : NOV.13,1971

REVISED 11-19-99 BY M.M. CHECKED BY R.W.W.
REVISED 8-28-99 BY E.L.R. CHECKED BY G.P.P.
REDRAWN 8/1990 BY S.A.I., CHECKED BY E.L.R.