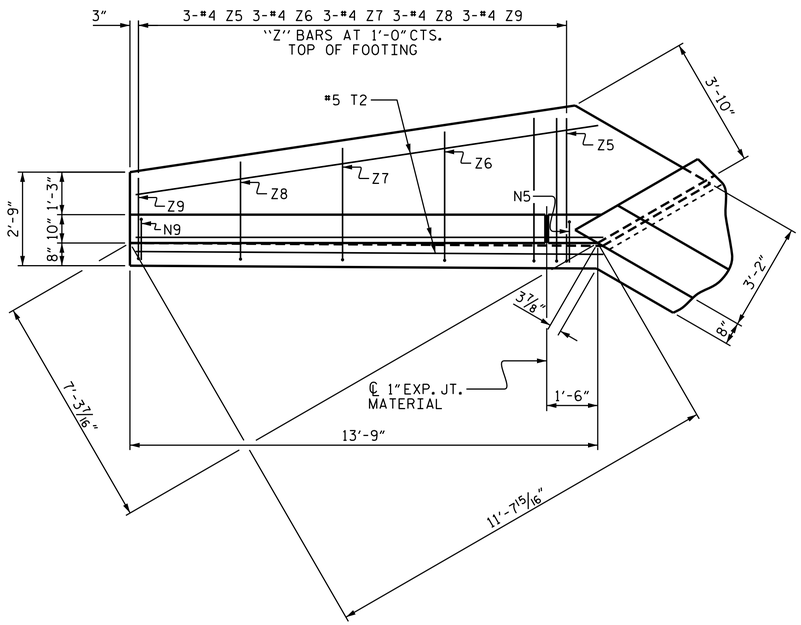

PLAN W1

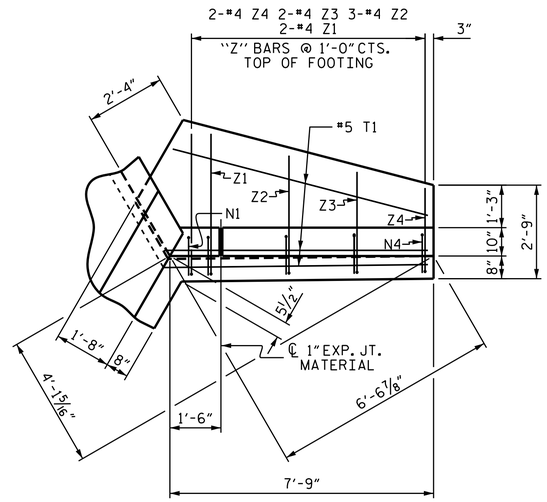

PLAN W2

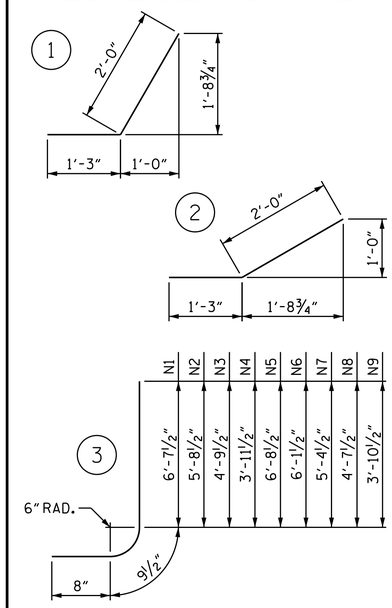

Z1	4'-2"	6"
Z2	3'-6"	6"
Z3	3'-0"	6"
Z4	2'-6"	6"
Z5	4'-3"	6"
Z6	3'-10"	6"
Z7	3'-4"	6"
Z8	2'-11"	6"
Z9	2'-5"	6"

4 HK.

BAR TYPES

ALL BAR DIMENSIONS ARE OUT TO OUT.

BILL OF MATERIAL

BAR	NO.	SIZE	TYPE	LENGTH	WEIGHT
H1	12	#4	STR	5'-10"	47
H2	4	#4	STR	2'-9"	7
H3	20	#4	1	3'-3"	43
H4	4	#4	STR	6'-5"	17
H5	12	#4	STR	11'-10"	95
H6	4	#4	STR	6'-3"	17
H7	20	#4	2	3'-3"	43
H8	4	#4	STR	12'-2"	33
N1	4	#4	3	8'-1"	22
N2	6	#4	3	7'-2"	29
N3	4	#4	3	6'-3"	17
N4	4	#4	3	5'-5"	14
N5	6	#4	3	8'-2"	33
N6	6	#4	3	7'-7"	30
N7	6	#4	3	6'-10"	27
N8	6	#4	3	6'-1"	24
N9	6	#4	3	5'-4"	21
T1	6	#5	STR	7'-9"	48
T2	6	#5	STR	13'-9"	86
V1	4	#4	STR	6'-1"	16
V2	6	#4	STR	5'-1"	20
V3	4	#4	STR	4'-2"	11
V4	4	#4	STR	3'-4"	9
V5	6	#4	STR	6'-2"	25
V6	6	#4	STR	5'-6"	22
V7	6	#4	STR	4'-9"	19
V8	6	#4	STR	4'-0"	16
V9	6	#4	STR	3'-3"	13
Z1	4	#4	4	4'-8"	12
Z2	6	#4	4	4'-0"	16
Z3	4	#4	4	3'-6"	9
Z4	4	#4	4	3'-0"	8
Z5	6	#4	4	4'-9"	19
Z6	6	#4	4	4'-4"	17
Z7	6	#4	4	3'-10"	15
Z8	6	#4	4	3'-5"	14
Z9	6	#4	4	2'-11"	12

STAGE I

REINFORCING STEEL	463	LBS
CLASS A CONCRETE		
2 WINGS	7.2	CY
1 HEADWALL	1.0	CY
1 END CURTAIN WALL	1.1	CY
TOTAL	9.3	CY

STAGE II

REINFORCING STEEL	463	LBS
CLASS A CONCRETE		
2 WINGS	7.2	CY
1 HEADWALL	1.0	CY
1 END CURTAIN WALL	1.1	CY
TOTAL	9.3	CY

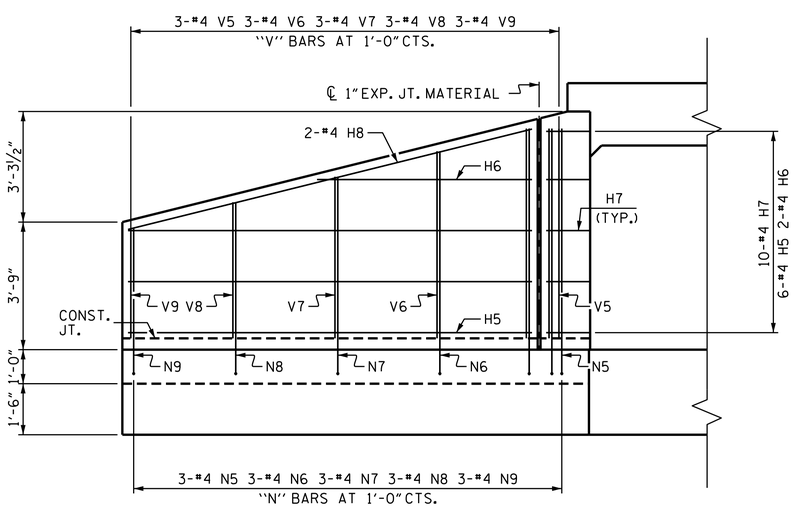

ELEVATION W1

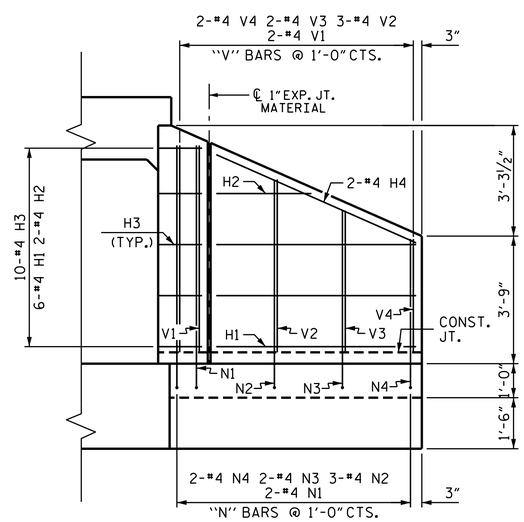

ELEVATION W2

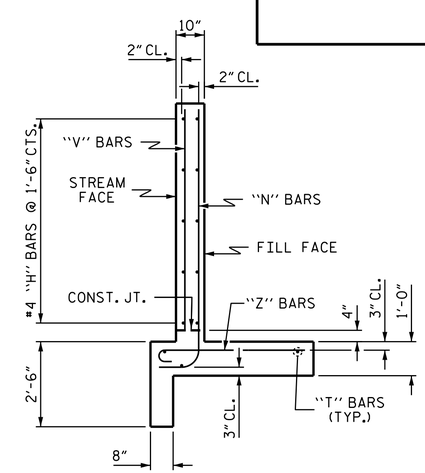

TYPICAL WING SECTION

PROJECT NO. R-0623

MONTGOMERY COUNTY

STATION: 53+95.00 -L-

SHEET 6 OF 7

STATE OF NORTH CAROLINA
DEPARTMENT OF TRANSPORTATION
RALEIGH

STANDARD WINGS FOR CONCRETE BOX CULVERT

H = 6'-0"
120° SKEW

NORTH CAROLINA PROFESSIONAL SEAL 36871 ENGINEER FRANCESCA LEA
9/29/2014
DocuSigned by: Francesca Lea
2020455113774BE

ASSEMBLED BY :	F. LEA	DATE :	12-2012
CHECKED BY :	S. WANCE	DATE :	02-2013
DRAWN BY :	CCJ		11/99
CHECKED BY :	RWW		03/00

REVISIONS

NO.	BY:	DATE:	NO.	BY:	DATE:
1			3		
2			4		

SHEET NO. C-6

TOTAL SHEETS 29