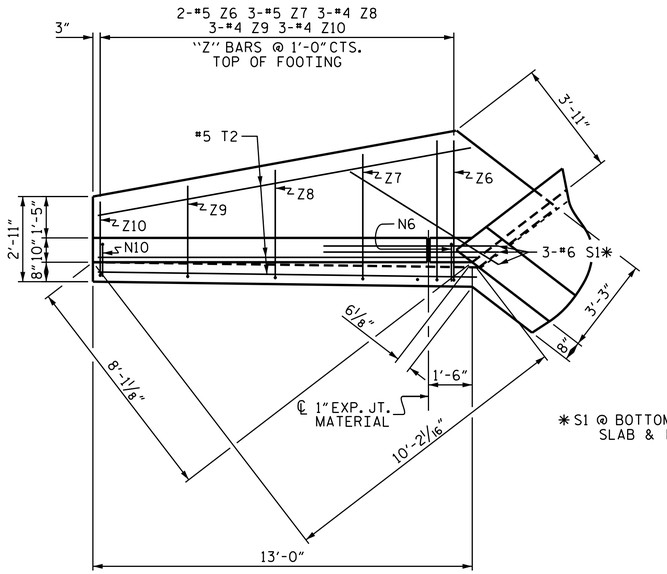

PLAN W1

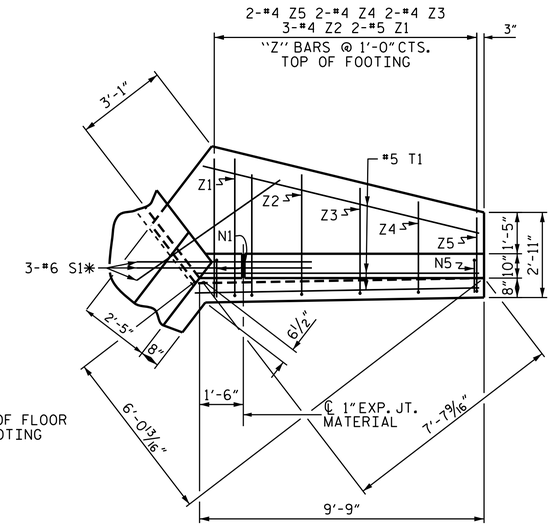

PLAN W2

* S1 @ BOTTOM OF FLOOR SLAB & FOOTING

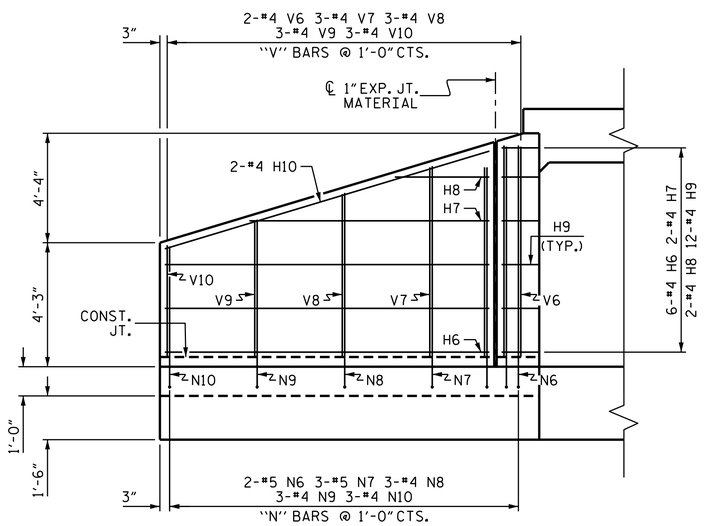

ELEVATION W1

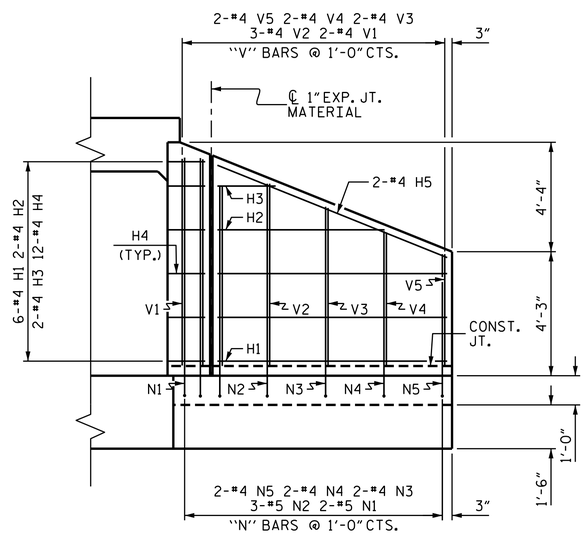

ELEVATION W2

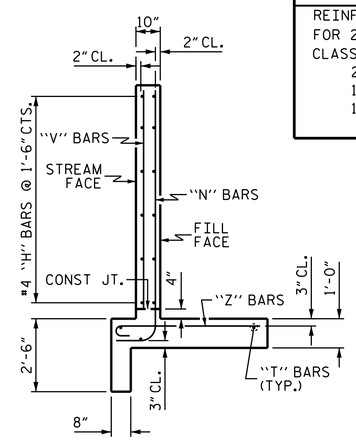

TYPICAL WING SECTION

BAR TYPES

ALL BAR DIMENSIONS ARE OUT TO OUT.

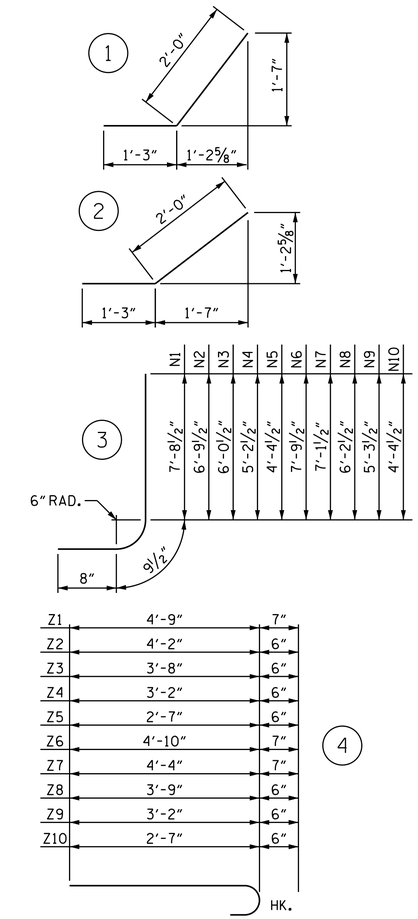

BILL OF MATERIAL

BAR	NO.	SIZE	TYPE	LENGTH	WEIGHT
H1	6	#4	STR	7'-10"	31
H2	2	#4	STR	5'-8"	8
H3	2	#4	STR	2'-0"	3
H4	12	#4	1	3'-3"	26
H5	2	#4	STR	8'-5"	11
H6	6	#4	STR	11'-1"	44
H7	2	#4	STR	8'-2"	11
H8	2	#4	STR	3'-3"	4
H9	12	#4	2	3'-3"	26
H10	2	#4	STR	11'-7"	15
N1	2	#5	3	9'-2"	19
N2	3	#5	3	8'-3"	26
N3	2	#4	3	7'-6"	10
N4	2	#4	3	6'-8"	9
N5	2	#4	3	5'-10"	8
N6	2	#5	3	9'-3"	19
N7	3	#5	3	8'-7"	27
N8	3	#4	3	7'-8"	15
N9	3	#4	3	6'-9"	14
N10	3	#4	3	5'-10"	12
S1	6	#6	STR	6'-0"	54
T1	3	#5	STR	9'-9"	31
T2	3	#5	STR	13'-0"	41
V1	2	#4	STR	7'-1"	9
V2	3	#4	STR	6'-3"	13
V3	2	#4	STR	5'-5"	7
V4	2	#4	STR	4'-7"	6
V5	2	#4	STR	3'-10"	5
V6	2	#4	STR	7'-3"	10
V7	3	#4	STR	6'-6"	13
V8	3	#4	STR	5'-7"	11
V9	3	#4	STR	4'-8"	9
V10	3	#4	STR	3'-10"	8
Z1	2	#5	4	5'-4"	11
Z2	3	#4	4	4'-8"	9
Z3	2	#4	4	4'-2"	6
Z4	2	#4	4	3'-8"	5
Z5	2	#4	4	3'-1"	4
Z6	2	#5	4	5'-5"	11
Z7	3	#5	4	4'-11"	15
Z8	3	#4	4	4'-3"	9
Z9	3	#4	4	3'-8"	7
Z10	3	#4	4	3'-1"	6

STAGE I		
REINFORCING STEEL		
FOR 2 WINGS	638	LBS
CLASS A CONCRETE		
2 WINGS	9.1	CY
1 HEADWALL	1.1	CY
1 END CURTAIN WALL	1.3	CY
TOTAL	11.4	CY

STAGE II		
REINFORCING STEEL		
FOR 2 WINGS	638	LBS
CLASS A CONCRETE		
2 WINGS	9.1	CY
1 HEADWALL	1.1	CY
1 END CURTAIN WALL	1.3	CY
TOTAL	11.4	CY

NORTH CAROLINA PROFESSIONAL SEAL 25461 ENGINEER EMANUEL I. OMILE
9/29/2014

DocuSigned by:
858110228E1B425...

PROJECT NO. R-0623
MONTGOMERY COUNTY
STATION: 77+04.00 -L-

SHEET 6 OF 7

STATE OF NORTH CAROLINA
DEPARTMENT OF TRANSPORTATION
RALEIGH

STANDARD WINGS FOR CONCRETE BOX CULVERT

H = 7'-0" SLOPE = 2:1
105° SKEW

REVISIONS						
NO.	BY:	DATE:	NO.	BY:	DATE:	SHEET NO. C-13
1			3			TOTAL SHEETS 29
2			4			

CULVERT #2 STD. NO. CW7507

ASSEMBLED BY :	E.I. OMILE	DATE :	3-17-13
CHECKED BY :	S. WANCE	DATE :	3-17-13
DRAWN BY :	CCJ	12/99	
CHECKED BY :	RWW	03/00	